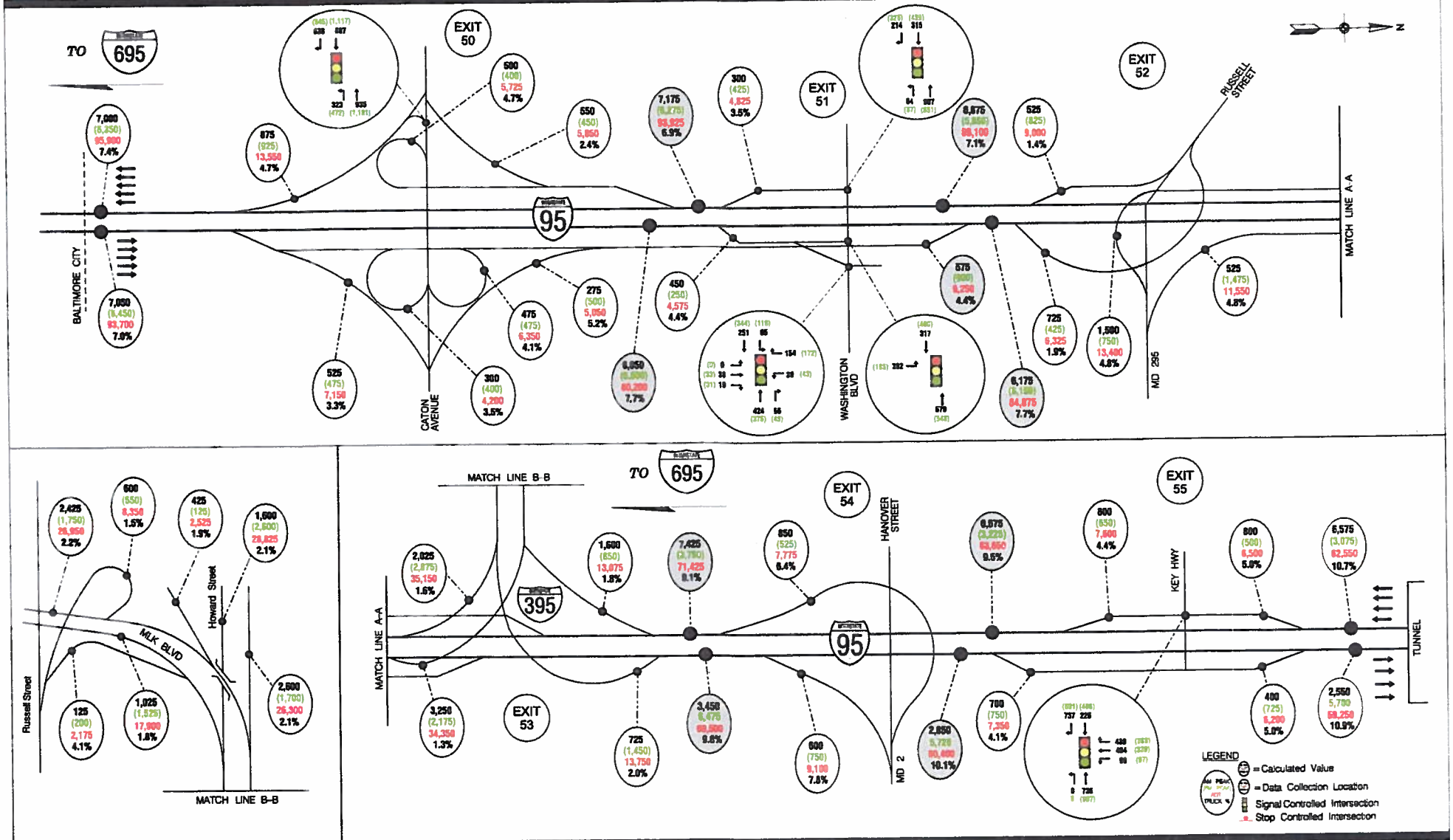

RK&K

I-95 from Baltimore City Line to Ft. McHenry Tunnel
Weekday Peak Hour, ADT and Truck Traffic Summary
Fall 2015 - Balanced

DRAFT
January 2016

Not to Scale

SHEET 1 OF 2

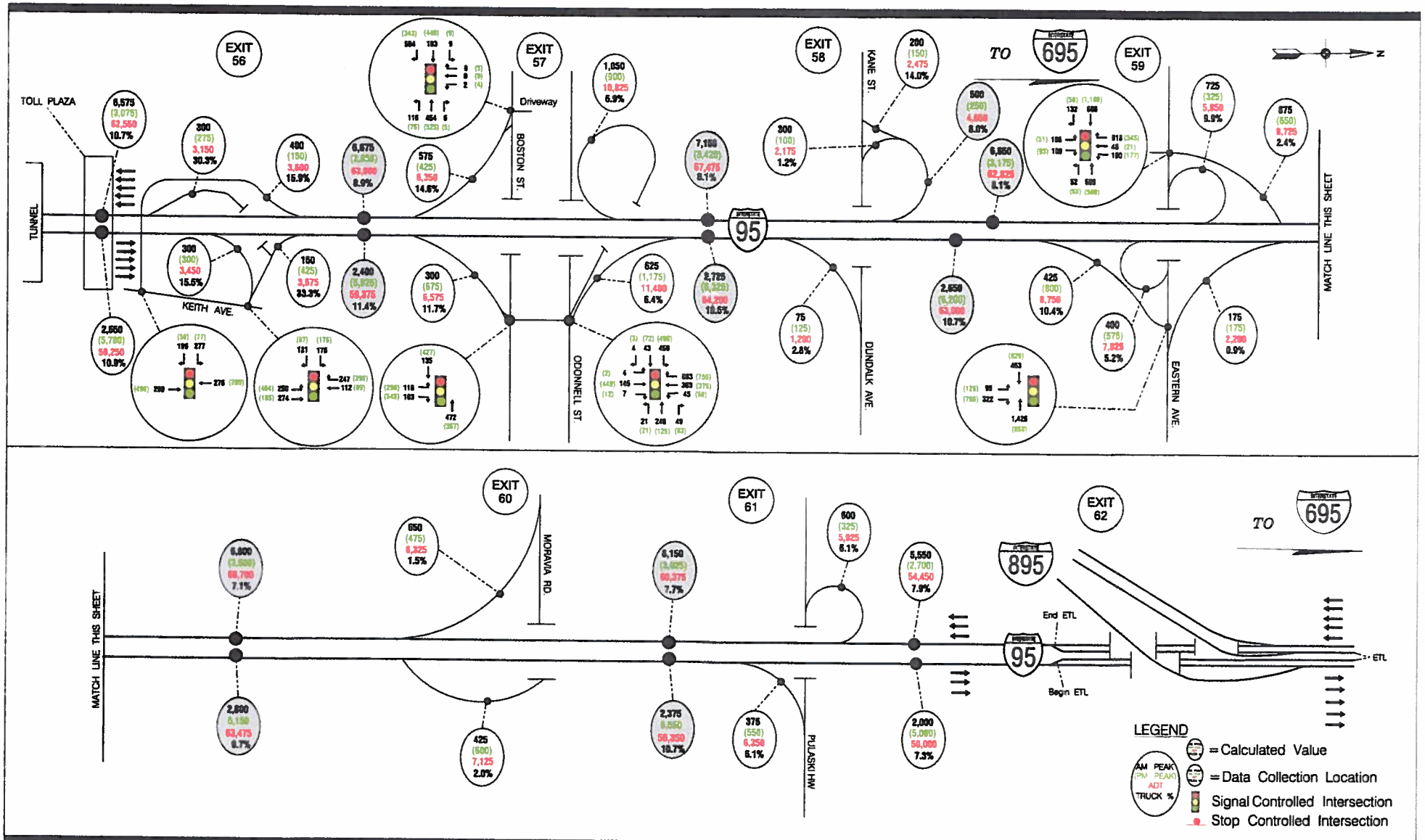

RK&K

I-95 from Ft. McHenry Tunnel to I-895
Weekday Peak Hour, ADT and Truck Traffic Summary
Fall 2015 - Balanced

DRAFT
January 2016

Not to Scale

SHEET 2 OF 2