Maryland Transportation Authority

FT-928-000-006

AASHTO DESIGN CRITERIA

THIS PROJECT WAS DESIGNED IN ACCORDANCE WITH THE 2001 EDITION OF AASHTO'S "A POLICY ON GEOMETRIC DESIGN OF HIGHWAYS AND STREETS."

EROSION AND SEDIMENT CONTROL REGULATIONS WILL BE STRICTLY ENFORCED DURING CONSTRUCTION.

DESIGN DESIGNATION		
ROADWAY	SB I-95	
CONTROL /YEAR	2007	2030
AVERAGE DAILY TRAFFIC (A.D.T.)	65,150	88,750
DESIGN HOURLY VOLUME (D.H.V.)	5,550	8,400
% TRUCKS - A.D.T.	10%	10%
% TRUCKS - D.H.V.	10%	10%
DESIGN SPEED (M.P.H.)	60	
FUNCTIONAL CLASSIFICATION	FREEWAY (INTERSTATE)	
TERRAIN	ROLLING	
ANTICIPATED POSTED SPEED	55 MPH	

FORT McHENRY TUNNEL

I-95 FROM MORAVIA ROAD TO THE FORT McHENRY TUNNEL PHASE 1 - SOUTHBOUND

BALTIMORE CITY

STRUCTURE NO. : BCW 588; BCW 596-2; BCW 598-2

CONTRACT NO.: FT-928-000-006

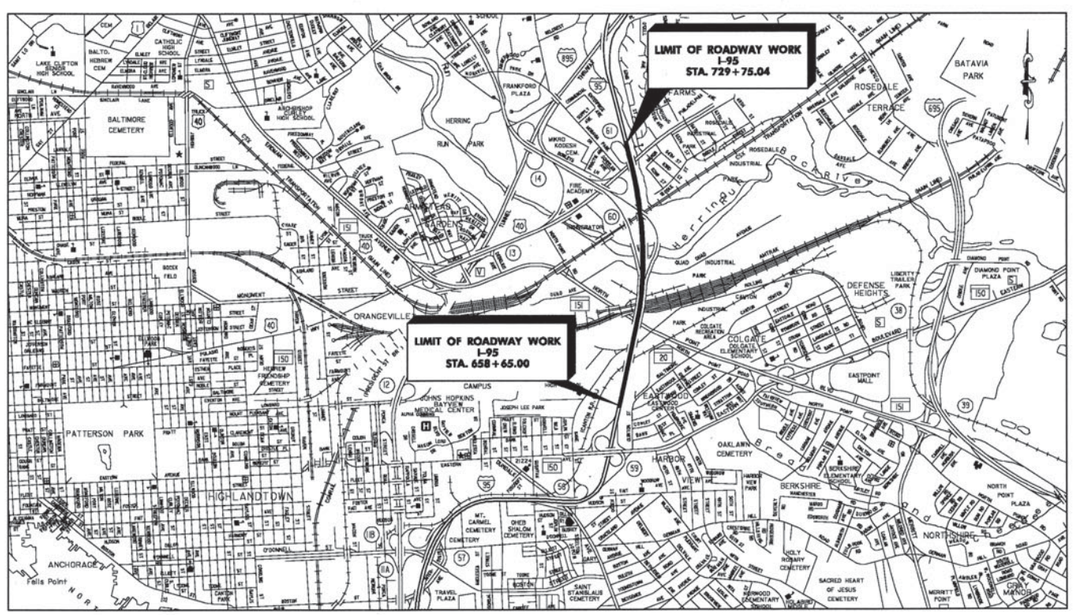

HORIZONTAL DATUM	NAD 83 /91
VERTICAL DATUM	NAVD 88

LOCATION MAP
SCALE : 1" = 2000'

ROADWAY WORK MILEAGE
1.35 MILES

DESIGN SPEED
60 MPH

STANDARDS AND SPECIFICATIONS

THIS PROJECT SHALL BE CONSTRUCTED IN ACCORDANCE WITH THE MARYLAND STATE HIGHWAY ADMINISTRATION'S "STANDARDS FOR HIGHWAY AND INCIDENTAL CONSTRUCTION", THE MARYLAND DEPARTMENT OF TRANSPORTATION STATE HIGHWAY ADMINISTRATION'S "STANDARD SPECIFICATIONS FOR CONSTRUCTION AND MATERIALS, JULY 2008" AND ALL REVISIONS THEREOF, THE LATEST MANUAL ON UNIFORM TRAFFIC CONTROL DEVICES (MUTCD) AND AS SPECIFIED IN THE CONTRACT DOCUMENTS.

COMPLETENESS OF DOCUMENTS

THE MARYLAND TRANSPORTATION AUTHORITY SHALL ONLY BE RESPONSIBLE FOR THE COMPLETENESS OF DOCUMENTS OBTAINED DIRECTLY FROM THE MARYLAND TRANSPORTATION AUTHORITY'S CASHIER'S OFFICE. FAILURE TO ATTACH ADDENDA MAY CAUSE THE BID TO BE IRREGULAR.

RIGHT OF WAY

RIGHT OF WAY AND EASEMENT LINES SHOWN ON THESE PLANS ARE FOR ASSISTANCE IN INTERPRETING THE PLANS. THEY ARE NOT OFFICIAL. FOR OFFICIAL FEE RIGHT OF WAY AND EASEMENT INFORMATION, SEE APPROPRIATE RIGHT OF WAY PLATS.

UTILITIES

THE LOCATION OF UTILITIES SHOWN ON THE PLANS ARE FOR INFORMATION AND GUIDANCE ONLY. NO GUARANTEE IS MADE OF THE ACCURACY OF SAID LOCATIONS. NOTIFICATION TO "MISS UTILITY", 1.800.257.7777, SHALL BE GIVEN 72 HOURS (THREE FULL WORKING DAYS) IN ADVANCE OF WORKING IN THE AREA OF THE SPECIFIC AFFECTED UTILITY. THE NOTIFICATION TO "MISS UTILITY" IS REQUIRED WHENEVER ANY EXCAVATING OR SIMILAR WORK IS TO BE PERFORMED.

NOTIFICATION TO JEFF ROBSON, THE MdTA UTILITIES MANAGER, SHALL BE GIVEN 72 HOURS (THREE FULL WORKING DAYS) IN ADVANCE OF WORKING IN THE AREA OF MdTA UTILITIES.

ENVIRONMENTAL INFORMATION

MDE # 09-SF-0237

ALL STORMWATER MANAGEMENT FACILITIES CONSTRUCTED FOR CONTRACT NO. FT-928-000-006 SHALL BE INSPECTED BIANNUALLY WITH MAINTENANCE PROVIDED WHEN REQUIRED.

SEDIMENT AND EROSION CONTROL REGULATIONS WILL BE STRICTLY ENFORCED DURING CONSTRUCTION.

FOLLOWING INITIAL SOIL DISTURBANCE OR REDISTURBANCE, PERMANENT OR TEMPORARY STABILIZATION SHALL BE COMPLETED WITHIN SEVEN (7) CALENDAR DAYS AS TO THE SURFACE OF ALL PERIMETER CONTROLS, DIKES, SWALES, DITCHES, PERIMETER SLOPES, AND ALL SLOPES GREATER THAN 3 HORIZONTAL TO 1 VERTICAL (3:1) AND FOURTEEN (14) DAYS AS TO ALL OTHER DISTURBED OR GRADED AREAS ON THE PROJECT SITE.

THE GRADING LIMITS SHOWN ON THE PLAN SHALL NOT BE EXCEEDED. ANY CHANGES IN THE SEDIMENT CONTROL PLAN, STORMWATER MANAGEMENT FACILITY OR OTHER SEGMENT OF WORK MUST BE REVIEWED AND APPROVED BY THE OFFICE OF ENVIRONMENTAL DESIGN AND/OR THE OFFICE OF THE CHIEF ENGINEER.

OWNERS / DEVELOPERS CERTIFICATION :

I / WE HEREBY CERTIFY THAT ALL CLEARING, GRADING, CONSTRUCTION AND/OR DEVELOPMENT WILL BE DONE PURSUANT TO THIS PLAN AND THAT ANY RESPONSIBLE PERSONNEL INVOLVED IN THE CONSTRUCTION PROJECT WILL HAVE A CERTIFICATE OF ATTENDANCE AT A MARYLAND DEPARTMENT OF THE ENVIRONMENT APPROVED TRAINING PROGRAM FOR THE CONTROL OF EROSION AND SEDIMENT BEFORE BEGINNING THE PROJECT. I HEREBY AUTHORIZE THE RIGHT OF ENTRY FOR PERIODIC ON-SITE EVALUATION BY STATE OF MARYLAND, DEPARTMENT OF THE ENVIRONMENT, COMPLIANCE INSPECTORS.

1/5/10
DATE:

OWNER/DEVELOPER SIGNATURE:

165
CARD. NO.

DOUGLAS NONOLIN, ENV. MGR.
PRINTED NAME AND TITLE:

ADVERTISEMENT

DATE

STATE OF MARYLAND THOMAS EDWARD MOHLER No. 16917 REGISTERED PROFESSIONAL ENGINEER

RK&K
RUMMEL, KLEPPER & KAHL, LLP
Engineers | Construction Managers
Planners | Scientists
www.rkk.com
81 MOSHER STREET | BALTIMORE, MD 21217
PH: (410) 728-2900
FAX: (410) 728-2160

THOMAS E. MOHLER, P.E. | ALL SHEETS EXCEPT: S-47 - S-59; BM-1 - BM-6; SN-8 - SN-9

I HEREBY CERTIFY THAT THESE DOCUMENTS WERE PREPARED OR APPROVED BY ME, AND THAT I AM A DULY LICENSED PROFESSIONAL ENGINEER UNDER THE LAWS OF THE STATE OF MARYLAND, LICENSE NO. 16917, EXPIRATION DATE: 6/30/10

STATE OF MARYLAND JOSEPH STEPHEN MAKAR No. 15768 PROFESSIONAL ENGINEER

WRA
Whitman, Requardt and Associates, LLP
Engineers and Planners
801 S. Caroline Street
Baltimore, Maryland 21231
(410) 235-3450

JOSEPH S. MAKAR P.E. | ONLY SHEETS: S-47 - S-59; BM-1 - BM-6; SN-8 - SN-9

I HEREBY CERTIFY THAT THESE DOCUMENTS WERE PREPARED OR APPROVED BY ME, AND THAT I AM A DULY LICENSED PROFESSIONAL ENGINEER UNDER THE LAWS OF THE STATE OF MARYLAND, LICENSE NO. 15768, EXPIRATION DATE: 6/30/11.

ADDENDUMS	MARYLAND TRANSPORTATION AUTHORITY	
	RECOMMENDED FOR APPROVAL Douglas M. Hutchison DIRECTOR OF ENGINEERING	1/5/10 DATE
	APPROVED Geoffrey V. Kolberg CHIEF ENGINEER, OFFICE OF ENGINEERING AND CONSTRUCTION	12/29/09 DATE
	APPROVED Ronald L. Freeland EXECUTIVE SECRETARY	1/5/10 DATE

BY: RTYLER -

INDEX OF SHEETS

SHEET NO.	DWG. NO.	DESCRIPTION
1	–	TITLE SHEET
2	IS–01	INDEX OF SHEETS
3	AB–01	ABBREVIATIONS AND CONVENTIONAL SIGNS
4	GN–01	GENERAL NOTES
5	TS–1	TYPICAL SECTIONS
6	TS–2	TYPICAL SECTIONS
7	TS–3	TYPICAL SECTIONS
8	TS–4	TYPICAL SECTIONS
9	DE–1	PAVEMENT DETAILS
10	DE–2	CONCRETE BARRIER AND UNDERDRAIN DETAILS
11	GS–01	GEOMETRY SHEET
12	PS–1	ROADWAY PLAN
13	PS–2	ROADWAY PLAN
14	PS–3	ROADWAY PLAN
15	PS–4	ROADWAY PLAN
16	PS–5	ROADWAY PLAN
17	PS–6	ROADWAY PLAN
18	PS–7	ROADWAY PLAN
19	SE–01	SUPERELEVATION TABLE
20	SE–02	SUPERELEVATION TABLE
21	SE–03	SUPERELEVATION TABLE
22	MT–1	TRAFFIC CONTROL GENERAL NOTES AND SEQUENCE OF CONSTRUCTION NOTES
23	MT–2	TRAFFIC CONTROL PLAN – STAGE 1
24	MT–3	TRAFFIC CONTROL PLAN – STAGE 1
25	MT–4	TRAFFIC CONTROL PLAN – STAGE 1
26	MT–5	TRAFFIC CONTROL PLAN – STAGE 1
27	MT–6	TRAFFIC CONTROL PLAN – STAGE 1
28	MT–7	TRAFFIC CONTROL PLAN – STAGE 1
29	MT–8	TRAFFIC CONTROL PLAN – STAGE 1
30	MT–9	TRAFFIC CONTROL PLAN – STAGE 1
31	MT–10	TRAFFIC CONTROL PLAN – STAGE 2
32	MT–11	TRAFFIC CONTROL PLAN – STAGE 2
33	MT–12	TRAFFIC CONTROL PLAN – STAGE 2
34	MT–13	TRAFFIC CONTROL PLAN – STAGE 2
35	MT–14	TRAFFIC CONTROL PLAN – STAGE 2
36	MT–15	TRAFFIC CONTROL PLAN – STAGE 2
37	MT–16	TRAFFIC CONTROL PLAN – STAGE 2
38	MT–17	TRAFFIC CONTROL PLAN – STAGE 3
39	MT–18	TRAFFIC CONTROL PLAN – STAGE 3
40	MT–19	TRAFFIC CONTROL PLAN – STAGE 3
41	MT–20	TRAFFIC CONTROL PLAN – STAGE 3
42	MT–21	TRAFFIC CONTROL PLAN – STAGE 3
43	MT–22	TRAFFIC CONTROL PLAN – STAGE 3
44	MT–23	TRAFFIC CONTROL PLAN – STAGE 4
45	MT–24	TRAFFIC CONTROL PLAN – STAGE 4
46	MT–25	TRAFFIC CONTROL PLAN – STAGE 4
47	MT–26	TRAFFIC CONTROL PLAN – STAGE 4
48	MT–27	STAGE 3 DETOUR PLAN (WORK HOURS ONLY)
49	PP–1	DRAINAGE PROFILE
50	PP–2	DRAINAGE PROFILE
51	PP–3	DRAINAGE PROFILE AND DETAILS
52	SW–1	BIORETENTION FACILITY – BMP NO, FT0004.
53	SW–2	BMP NO, FT0004 – STORMWATER MANAGEMENT PROFILE & DETAIL SHEET.
54	SW–3	STAKEOUT FOR PRE–TREATMENT AND BIORETENTION FACILITY BMP NO, FT0004.
55	SW–4	STAKEOUT FOR PRE–TREATMENT AND BIORETENTION FACILITY BMP NO, FT0004.
56	SW–5	BIORETENTION FACILITY BMP NO, FT0004 CHECKLIST
57	ED–1	EROSION AND SEDIMENT CONTROL GENETAL NOTES
58	ED–2	EROSION AND SEDIMENT CONTROL GENETAL NOTES
59	ED–3	EROSION AND SEDIMENT CONTROL GENETAL NOTES
60	ED–4	EROSION AND SEDIMENT CONTROL GENETAL NOTES
61	ED–5	EROSION AND SEDIMENT CONTROL DETAILS
62	ES–1	EROSION AND SEDIMENT CONTROL
63	ES–2	EROSION AND SEDIMENT CONTROL
64	ES–3	EROSION AND SEDIMENT CONTROL
65	ES–4	EROSION AND SEDIMENT CONTROL
66	ES–5	EROSION AND SEDIMENT CONTROL
67	ES–6	EROSION AND SEDIMENT CONTROL
68	ES–7	EROSION AND SEDIMENT CONTROL
69	ES–8	EROSION AND SEDIMENT CONTROL
70	ES–9	EROSION AND SEDIMENT CONTROL
71	ES–10	EROSION AND SEDIMENT CONTROL
72	ES–11	EROSION AND SEDIMENT CONTROL
73	ES–12	EROSION AND SEDIMENT CONTROL
74	ES–13	EROSION AND SEDIMENT CONTROL
75	ES–14	EROSION AND SEDIMENT CONTROL
76	ES–15	EROSION AND SEDIMENT CONTROL
77	ES–16	EROSION AND SEDIMENT CONTROL
78	ES–17	EROSION AND SEDIMENT CONTROL
79	ES–18	EROSION AND SEDIMENT CONTROL
80	ES–19	EROSION AND SEDIMENT CONTROL
81	ES–20	EROSION AND SEDIMENT CONTROL
82	ES–21	EROSION AND SEDIMENT CONTROL

SHEET NO.	DWG. NO.	DESCRIPTION
83	S–1	BCW 596–2 – GENERAL PLAN AND ELEVATION – 1
84	S–2	BCW 596–2 – GENERAL PLAN AND ELEVATION – 2
85	S–3	BCW 596–2 – GENERAL PLAN AND ELEVATION – 3
86	S–4	BCW 596–2 – GENERAL PLAN AND ELEVATION – 4
87	S–5	BCW 596–2 – EXISTING AND PROPOSED SECTIONS – 1
88	S–6	BCW 596–2 – EXISTING AND PROPOSED SECTIONS – 2
89	S–7	BCW 596–2 – SEQUENCE OF CONSTRUCTION – 1
90	S–8	BCW 596–2 – SEQUENCE OF CONSTRUCTION – 2
91	S–9	BCW 596–2 – SEQUENCE OF CONSTRUCTION – 3
92	S–10	BCW 596–2 – SEQUENCE OF CONSTRUCTION – 4
93	S–11	BCW 596–2 – DECK REINFORCING DETAILS
94	S–12	BCW 596–2 – PARAPET TRANSITION DETAILS
95	S–13	BCW 596–2 – DECK DRAINAGE DETAILS – 1
96	S–14	BCW 596–2 – DECK DRAINAGE DETAILS – 2
97	S–15	BCW 596–2 – DECK DRAINAGE DETAILS – 3
98	S–16	BCW 596–2 – DECK DRAINAGE DETAILS – 4
99	S–17	BCW 596–2 – APPROACH SPAN DETAILS – 1
100	S–18	BCW 596–2 – APPROACH SPAN DETAILS – 2
101	S–19	BCW 596–2 – APPROACH SPAN DETAILS – 3
102	S–20	BCW 596–2 – DECK JOINT DETAILS – 1
103	S–21	BCW 596–2 – DECK JOINT DETAILS – 2
104	S–22	BCW 596–2 – DECK JOINT DETAILS – 3
105	S–23	BCW 596–2 – DECK JOINT DETAILS – 4
106	S–24	BCW 596–2 – DECK JOINT DETAILS – 5
107	S–25	BCW 596–2 – DECK JOINT DETAILS – 6
108	S–26	BCW 596–2 – MISCELLANEOUS DETAILS
109	S–27	BCW 596–2 – APPROACH SLAB DETAILS
110	S–28	BCW 596–2 – SUBSTRUCTURE REPAIR SCHEDULE, GENERAL NOTES AND DETAILS
111	S–29	BCW 596–2 – SUBSTRUCTURE REPAIR DETAILS AND PROCEDURES
112	S–30	BCW 598–2 – GENERAL PLAN AND ELEVATION
113	S–31	BCW 598–2 – EXISTING AND PROPOSED SECTIONS
114	S–32	BCW 598–2 – SEQUENCE OF CONSTRUCTION – 1
115	S–33	BCW 598–2 – SEQUENCE OF CONSTRUCTION – 2
116	S–34	BCW 598–2 – DECK REINFORCING DETAILS
117	S–35	BCW 598–2 – APPROACH SPAN DETAILS – 1
118	S–36	BCW 598–2 – APPROACH SPAN DETAILS – 2
119	S–37	BCW 598–2 – APPROACH SPAN DETAILS – 3
120	S–38	BCW 598–2 – DECK JOINT DETAILS – 1
121	S–39	BCW 598–2 – DECK JOINT DETAILS – 2
122	S–40	BCW 598–2 – DECK JOINT DETAILS – 3
123	S–41	BCW 598–2 – DECK JOINT DETAILS – 4
124	S–42	BCW 598–2 – APPROACH SLAB DETAILS
125	S–43	BCW 588 – KEY PLAN
126	S–44	BCW 588 – GENERAL PLAN AND ELEVATION – RAMPS A AND B
127	S–45	BCW 588 – SUBSTRUCTURE REMOVAL DETAILS
128	S–46	BCW 588 – SUBSTRUCTURE REMOVAL DETAILS
129	S–47	GENERAL NOTES
130	S–48	DEMOLITION DETAILS
131	S–49	OH–52 – EXISTING DECK PLAN AND SECTION – REMOVAL LIMITS
132	S–50	OH–52 – PROPOSED DECK PLAN AND SECTION
133	S–51	OH–52 – PROPOSED REINFORCEMENT DETAILS – I
134	S–52	OH–52 – PROPOSED REINFORCEMENT DETAILS – II
135	S–53	OH–52 – PROPOSED REINFORCEMENT DETAILS – III
136	S–54	OH–52 – PROPOSED REINFORCEMENT DETAILS – IV
137	S–55	PARAPET GEOMETRICS – OVERHEAD SPAN SIGN STRUCTURES
138	S–56	MISCELLANEOUS DETAILS
139	S–57	PARAPET REINFORCEMENT AT JUNCTION BOX
140	S–58	CHAIN LINK FENCE DETAILS
141	S–59	REMOVAL OF EXISTING SIGN STRUCTURE SUPPORT BRACKETS
142	BM–1	BRIDGE MOUNTED SIGN SUPPORT – TYPE I
143	BM–2	BRIDGE MOUNTED SIGN SUPPORT – TYPE II
144	BM–3	BRIDGE MOUNTED SIGN STRUCTURE TABLES
145	BM–4	BRIDGE MOUNTED OVERHEAD SPAN SIGN STRUCTURES
146	BM–5	BRIDGE MOUNTED OVERHEAD SIGN STRUCTURE –TRUSS CHORD, BASE PLATE & ANCHORAGE DETAILS
147	BM–6	BRIDGE MOUNTED OVERHEAD SIGN STRUCTURE – CLAMP PLATE DETAILS
148	STD–1	STRUCTURAL STANDARDS
149	STD–2	STRUCTURAL STANDARDS
150	STD–3	STRUCTURAL STANDARDS
151	STD–4	STRUCTURAL STANDARDS
152	STD–5	STRUCTURAL STANDARDS
153	STD–6	STRUCTURAL STANDARDS
154	STD–7	STRUCTURAL STANDARDS
155	STD–8	STRUCTURAL STANDARDS
156	STD–9	STRUCTURAL STANDARDS
157	STD–10	STRUCTURAL STANDARDS
158	STD–11	STRUCTURAL STANDARDS
159	STD–12	STRUCTURAL STANDARDS

SHEET NO.	DWG. NO.	DESCRIPTION
160	STD–13	STRUCTURAL STANDARDS
161	STD–14	STRUCTURAL STANDARDS
162	STD–15	STRUCTURAL STANDARDS
163	SN–1	GENERAL NOTES AND PROPOSALS
164	SN–2.1	SIGNING AND PAVEMENT MARKING PLAN
165	SN–2.2	SIGNING AND PAVEMENT MARKING PLAN
166	SN–2.3	SIGNING AND PAVEMENT MARKING PLAN
167	SN–2.4	SIGNING AND PAVEMENT MARKING PLAN
168	SN–2.5	SIGNING AND PAVEMENT MARKING PLAN
169	SN–2.6	SIGNING AND PAVEMENT MARKING PLAN
170	SN–3.1	GUIDE SIGN DETAILS AND DIMENSIONS
171	SN–8	OVERHEAD SIGN STRUCTURE
172	SN–9	CANTILEVER SIGN STRUCTURE
173	SN–11.1	INDEX OF QUANTITIES
174	SN–11.2	INDEX OF QUANTITIES
175	E–1	GENERAL NOTES AND LEGEND
176	E–2	ELECTRICAL PLAN
177	E–3	ELECTRICAL PLAN
178	E–4	ELECTRICAL PLAN
179	E–5	ELECTRICAL PLAN
180	E–6	ELECTRICAL PLAN
181	E–7	ELECTRICAL PLAN
182	LA–1	BIORETENTION AREA – TREE REMOVAL PLAN
183	LA–2	BIORETENTION AREA – PROPOSED LANDSCAPING PLAN
184	LA–3	BIORETENTION LANDSCAPING FOR BMP NO. FT0004
185	LA–4	PEDESTRIAN RAMP REMOVAL AREA – PROPOSED LANDSCAPING PLAN
186	SO–1	BORING & DRIVE TESTS
187	SO–2	BORING & DRIVE TESTS
188	GT–01	GRADING TABLE / SUMMARY OF EARTHWORK

REFERENCE PLANS:

FOR THE CONVENIENCE AND INFORMATION OF BIDDERS, A CD OF PLANS FOR PREVIOUS I–95 PROJECTS IS INCLUDED WITH THIS CONTRACT. NO RESPONSIBILITY FOR THE ACCURACY OR COMPLETENESS OF THESE REFERENCE PLANS IS ASSUMED BY THE MARYLAND TRANSPORTATION AUTHORITY. DIMENSIONS, DETAILS, ETC. AS SHOWN MAY NOT BE AS BUILT.

SHEETS INCLUDED ON REFERENCE CD:
CONTRACT BC 246–33–815 – SHEETS S–31 TO S–55C
CONTRACT BC 246–34–815 – ALL SHEETS
CONTRACT FT–312–000–002 – SHEETS 1 TO 4 AND 37 TO 71
CONTRACT FT–458–000–006 – SHEETS 1, 2, 5, 6, 10, 27 TO 29, 32, 33, AND 36 TO 38

RK&K
81 MOSHER STREET | BALTIMORE, MD 21217
PH: (410) 728-2900 FAX: (410) 728-3160
Engineers Construction Managers Planners Scientists
www.rkk.com

MARYLAND TRANSPORTATION AUTHORITY
Engineering Division

ADDENDUMS & REVISIONS

NO.	DESCRIPTION	BY	DATE

I-95 FROM MORAVIA ROAD TO THE FORT McHENRY TUNNEL - PHASE 1 - SOUTHBOUND
I-95 (BALTIMORE CITY)
INDEX OF SHEETS

CONTRACT NO. FT 928-000-006
DRAWING NO. IS–01

DESIGNED BY R.W.T. | DRAWN BY R.W.T. | CHECKED BY J.M.R.
CONST. REVIEW BY | DATE DECEMBER 2009 | SCALE AS SHOWN

ABBREVIATIONS

A.A.S.H.T.O.	American Association of State Highway Transportation Officials
ADT	Average Daily Traffic
AHD	Ahead
APPROX.	Approximate
AUTHORITY	Maryland Transportation Authority
AWG	American Wire Gauge
BG&E	Baltimore Gas & Electric
℄ or B/L	Baseline
BK	Back /Book
BIT.	Bituminous
B.C.	Bituminous Concrete
B.M.	Bench Mark
BOT.	Bottom
C.C.	Center of Curve
CCTV	Closed Circuit TV
CATV	Cable Television
C.B.R.	California Bearing Ratio
C or C/L	Centerline
C.I.	Cast Iron
C.I.S.P.	Cast Iron Soil Pipe
CL.	Class
CLF	Chainlink Fence
CMP	Corrugated Metal Pipe
C.O.	Cleanout
COMB.	Combination
CONC.	Concrete
CONSTR.	Construction
COR.	Corner
CORR.	Correction
CS	Curve to Spiral
C.Y.	Cubic Yards
DC	Degree of Curve
D.H.V.	Design Hourly Volume
D.I.	Drop Inlet
DIA.	Diameter
D.O.	Double Opening
DS	Design Speed
DWG	Drawing
E	East
E	Electric
E	East, External
E	External Distance
EA.	Each
E.B.	Eastbound
ELECT.	Electric
ELEV.	Elevation
ENTR.	Entrance
E.R.C.C.P.	Elliptical Reinforced Cement Concrete Pipe
ES	End Section
ETL	Express Toll Lanes
ETC	Electronic Toll Collection
EW	End Wall
EX. or EXIST.	Existing
F	Toe of Fill
FT.	Feet
F or FL	Flowline
F.B.D.	Flat Bottom Ditch
F.H.	Fire Hydrant
FWD.	Forward
G	Gas
GA.	Gauge
G.A.B.	Graded Aggregate Base
G & E	Gas & Electric
G	Gas
GP	General Purpose
GR	Ground
G.V.	Gas Valve
H	Handbox
H.B.	Handbox
H.D.P.	High Density Polyetheylene
HDWL	Headwall
H.E.R.C.P.	Horizontal Ellipitical Reinforced Concrete Pipe
HMA	Hot Mix Asphalt
HOR.	Horizontal
HR.	Hour
H.P.	High Point
IN	Inch
I	Inlet
ITS	Intelligent Transportation System
I.S.T.	Inlet Sediment Trap
INV.	Invert
J.B.	Junction Box
K	K Inlet
L	Length
L.F.	Linear Feet
L.L.	Liquid Limit
L.P.	Light Pole
LOD	LimitT of Disturbance
L.S.	Lump Sum
LT.	Left
LS	Length of Spiral Curve
MAC.	Macadam
MdTA	Maryland Transportation Authority
LT.	Left
M.C.	Moisture Content
MAX.	Maximum
MD	Maryland
MDE	Maryland Department of The Environment
M.D.D.	Maximum Dry Content
MOD.	Modified
MIN.	Minimum
M.H.	Manhole
MISC.	Miscellaneous
MOD.	Modified
M.P.H.	Miles Per Hour
N	North
NB	Northbound
N.B.R.	Northbound Roadway
N.E.	Northeast
N.P.	Non–Plastic
NO.	Number
N.T.S.	Not to Scale
O.C.	On Center
OHE	Overhead Electric
O.H.	Overhead
O.M.	Optimum Moisture
PAV'T.	Pavement
P.C.	Point of Curvature
P.C.C.	Point of Compound Curvature
P/C	Point of Crown
P/GE	Profile Grade Elevation
P.G.L.	Profile Grade Line
P/GL	Profile Ground Line
P/R	Point of Rotation
P.I.	Plasticity Index
P.I.	Point of Intersection
P.O.C.	Point On Curve
P.O.T.	Point On Tangent
PROP.	Proposed
P.R.C.	Point of Reverse Curve
PT.	Point
P.T.	Point of Tangency
P.V.C.	Point of Vertical Curve
PVC	Polyvinyl Chloride
PVI	Point of Vertical Intersection
PVMS	Portable Variable Message Sign
PVRC	Point of Vertical Reverse Curve
PVT	Point of Vertical Tangency
R	Radius
R.F.	Rock Fragments
R/R	Railroad
RT.	Right
RW or R/W	Right of Way
R.C.P.	Reinforced Cement Pipe
R.C.C.P.	Reinforced Cement Concrete Pipe
R.Q.D.	Rock Quality Desgnation
R.M.	Rootmat
S	South
SAN.	Sanitary Sewer
SB or S/B	Southbound
S.B.R.	Southbound Roadway
SC	Spiral to Curve
S.D.	Storm Drain
S.D.D.	Surface Drain Ditch
S/E	Super Elevation
SF	Silt Fence
S.F.	Square Feet
S.H.A.	StateE Highway Administration
SHLD.	Shoulder
SHT.	Sheet
S.P.P.	Structural Plate Pipe
S.P.T.	Standard Penetration Testing
SSD	Stopping Sight Distance
SSF	Super Silt Fence
ST	Spiral to Tangent
STD.	Standard
STA.	Station
SO.	Single Opening
S.Y.	Square Yards
SWM	Stormwater Management
T	Tangent
T	Telephone
T.C.	Top of Cover
TCP	Traffic Control Plan
T.G.	Top of Grate
TH	Test Hole
T or TL	Traverse Line
T.M.	Top of Manhole
TOS	Top of Structure
TRAV.	Traverse
TS	Tangent to Spiral
TS	Temporary Swale
T.S.	Top of Slab
T.S.	Topsoil
TYP.	Typical
U.D.	Under Drain
U.G.	Underground
U.P.	Utility Pole
VCL	Vertical Clearance
V.C.L.	Vertical Curve Length
W	Water
W	West
W.B.	Westbound
WB	Wetland Buffer
W.M.	Water Meter
W.S.	Wrapped Steel
W.V.	Water Valve
X–SLOPE	Cross–Slope

CONVENTIONAL SIGNS

EXISTING CONCRETE MEDIAN BARRIER
PROPOSED CONCRETE MEDIAN BARRIER
ELECTRICAL HAND BOX – SIGNALS — H.B.
FLOW LINE
STATE, COUNTY OR CITY LINES
PROPOSED TRAFFIC BARRIER W–BEAM
EXISTING TRAFFIC BARRIER W–BEAM
PROPOSED FENCE LINE
EXISTING FENCE LINE
EXISTING RIGHT OF WAY LINE
EXISTING ROADWAY
RAILROAD
BASE LINE OR SURVEY LINE — 50 — 31 — 32
FIRE HYDRANT — F.H.
HISTORIC BOUNDARY — H
PLAN LOCATION OF SOIL BORINGS /PAVEMENT CORES
LIGHT POLE — L. P.
TRAFFIC SIGN
EXISTING TRAFFIC FLOW
PROPOSED TRAFFIC FLOW

PROPOSED PIPE /CULVERT
EXISTING PIPE /CULVERT
EXISTING DROP INLET
UTILITY POLE
WETLAND
WETLAND BUFFER — B
STREAMS /WATERS OF U.S.
HEDGE /TREE LINE
BUSH /TREE
CONIFEROUS TREE
GROUND ELEVATION — DATUM LINE — 173.6
GRADE ELEVATION — DATUM LINE — 210.22
PROPOSED BASELINE CONSTRUCTION — 10+00 — 11+00
PROPOSED LIMIT OF CUT — C — C
PROPOSED LIMIT OF FILL — F — F
PROPOSED LIMIT OF DISTURBANCE — LOD — LOD
PROPOSED TEST HOLE LOCATION — TH-20

RK&K
81 MOSHER STREET | BALTIMORE, MD 21217
PH: (410) 728-2900 FAX: (410) 728-3160
Engineers Construction Managers Planners Scientists
www.rkk.com

MARYLAND TRANSPORTATION AUTHORITY
Engineering Division

ADDENDUMS & REVISIONS

NO.	DESCRIPTION	BY	DATE

I-95 FROM MORAVIA ROAD TO THE FORT McHENRY TUNNEL - PHASE 1 - SOUTHBOUND
I-95 (BALTIMORE CITY)
ABBREVIATIONS AND CONVENTIONAL SIGNS

DESIGNED BY R.W.T. | DRAWN BY R.W.T. | CHECKED BY J.M.R.
CONST. REVIEW BY | DATE DECEMBER 2009 | SCALE AS SHOWN

CONTRACT NO. FT 928-000-006
DRAWING NO. AB–01
SHEET NO. 3 OF 188

PERMIT/ENVIRONMENTAL NOTES

1. PRIOR TO CONSTRUCTION, DEMARCATE WATERS OF THE U.S. NOT AUTHORIZED TO BE FILLED AND IMMEDIATELY ADJACENT TO CONSTRUCTION AREA WITH ORANGE FENCE OR SUPER SILT FENCE. USE SUPER SILT FENCE ALONG STREAMS AND WETLANDS TO PROTECT AGAINST SEDIMENT RELEASES.
2. NO STOCKPILING OR STORAGE OF EQUIPMENT OR MATERIALS OR ERECTION OF ANCILLARY FACILITIES WITHIN WATERS OF THE U.S. OR WETLANDS. TEMPORARY STOCKPILES OF FILL MATERIAL TO BE LOCATED IN UPLAND AREAS AND NOT TO IMPACT WATERS OF THE U.S. OR WETLANDS. NO TEMPORARY CONSTRUCTION TRAILERS OR STRUCTURES, STAGING AREAS, OR STOCKPILES MAY BE LOCATED WITHIN NONTIDAL WETLANDS, BUFFERS, OR THE 100-YR FLOODPLAIN UNLESS SPECIFICALLY INCLUDED IN THE APPROVED PLAN. NO MATERIALS, EQUIPMENT, DEBRIS, OR EXCAVATED SOILS WILL BE STOCKPILED OR STORED WITHIN TEMPORARILY IMPACTED WETLANDS OR BUFFERS. NO MATERIALS, EQUIPMENT, DEBRIS SHALL BE STOCKPILED OR STORED IN NONTIDAL WETLANDS, BUFFERS, WATERWAYS, OR THE 100-YR FLOODPLAIN.
3. UNLESS OTHERWISE SHOWN ON THE APPROVED PLAN, ALL EXCESS FILL, SPOIL, MATERIAL, DEBRIS, AND CONSTRUCTION MATERIAL SHALL BE DISPOSED OF OUTSIDE OF NONTIDAL WETLANDS, BUFFERS, AND THE 100-YR FLOODPLAIN, AND IN A MANNER WHICH DOES NOT ADVERSELY IMPACT SURFACE WATER FLOW INTO OR OUT OF NONTIDAL WETLANDS, BUFFERS, WATERWAYS, OR THE 100-YR FLOODPLAIN.
4. DISPOSAL OF EXCESS EXCAVATION MATERIAL TO BE MONITORED BY INSPECTION PERSONNEL TO ENSURE MATERIALS ARE NOT PLACED IN WETLANDS OR STREAMS.
5. NO WASHING OF CONCRETE TRUCKS IN A MANNER THAT ALLOWS WASH WATER TO ENTER A STREAM OR WETLAND.
6. NO BLASTING OR USE OF EXPLOSIVES IN STREAM CHANNEL WITHOUT PRIOR WRITTEN APPROVAL FROM MDE.
7. BACKFILL, INCLUDING EXCAVATED MATERIAL USED AS BACKFILL, MUST NOT CONTAIN WASTE METAL PRODUCTS, UNSIGHTLY DEBRIS, TOXIC MATERIALS, OR ANY OTHER DELETERIOUS SUBSTANCES.
8. CONSTRUCTION EQUIPMENT SHALL NOT ENTER WATERS OF THE U.S. NO MOTOR-DRIVEN CONSTRUCTION EQUIPMENT IS ALLOWED WITHIN STREAM CHANNELS UNLESS ON AUTHORIZED FORD CROSSINGS. STREAMBEDS NOT TO BE USED AS ACCESS WAYS BY CONSTRUCTION VEHICLES OR EQUIPMENT. NO MOTOR-DRIVEN CONSTRUCTION EQUIPMENT IS ALLOWED WITHIN STREAM CHANNELS UNLESS SHOWN ON APPROVED PLAN OR SPECIFICALLY AUTHORIZED IN WRITING BY MDE. PLACE HEAVY EQUIPMENT ON MATS OR SUITABLY OPERATE THE EQUIPMENT TO PREVENT DAMAGE TO NONTIDAL WETLANDS, BUFFERS, WATERWAYS, AND THE 100-YR FLOODPLAIN.
9. ACTIVITIES WITHIN THE STREAM CHANNELS ARE PROHIBITED AS DETERMINED BY STREAM CLASSIFICATION PER COMAR 26.08.02.08. IN-STREAM WORK IS PROHIBTED AS DETERMINED BY STREAM CLASSIFICATION PER COMAR 26.08.02. DUE TO YELLOW PERCH SPAWNING, AN EXTENDED CLOSURE PERIOD OF FEBRUARY 15 THROUGH JUNE 15, INCLUSIVE, SHALL BE OBSERVED.
10. AREAS IN NON-TIDAL WETLANDS AND BUFFERS REQUIRING VEGETATIVE STABILIZATION SHOULD BE SEEDED AND MULCHED TO REDUCE EROSION AFTER CONSTRUCTION ACTIVITIES HAVE BEEN COMPLETED.
11. IF DISCOVERED, REPORT ANY PREVIOUSLY UNKNOWN HISTORICAL OR ARCHEOLOGICAL REMAINS TO USACE.

GENERAL NOTES

1. THE CONTRACTOR SHALL CONTACT "MISS UTILITY" AT 1-800-257-7777 AND JEFF ROBSON AT THE MARYLAND TRANSPORTATION AUTHORITY AT 410-537-1274, 72 HOURS PRIOR TO EXCAVATION. REFER TO THE UTILITY STATEMENT IN THE IFB FOR FURTHER INSTRUCTIONS.
2. ALL EXISTING STORM DRAIN STRUCTURES, SEWER MANHOLES, VALVE BOXES, VAULTS, ETC. SHALL BE ADJUSTED BY THE CONTRACTOR TO MEET THE FINISHED GRADE ELEVATION, UNLESS THESE APPURTENANCES ARE ABANDONED OR REMOVED UNDER THIS CONTRACT.
3. THE EXISTING UTILITIES AND OBSTRUCTIONS SHOWN ON THESE PLANS ARE FROM THE BEST AVAILABLE RECORDS AND SHALL BE VERIFIED BY THE CONTRACTOR PRIOR TO CONSTRUCTION. THE CONTRACTOR SHALL NOTIFY ALL UTILITY OWNERS CONCERNED PRIOR TO GRADING OPERATIONS.
4. THE LOCATION AND LENGTH OF PROPOSED PIPE AND DRAINAGE STRUCTURES SHALL BE VERIFIED BY THE CONTRACTOR BEFORE ORDERING.
5. ALL INVERT ELEVATIONS ARE APPROXIMATE. INVERT ELEVATIONS OF INLETS AND PIPES MAY BE MODIFIED AS DIRECTED BY THE ENGINEER TO MEET CONDITIONS ENCOUNTERED DURING INSTALLATION OF DRAINAGE STRUCTURES. ALL PIPES AND DITCHES SHALL BE CONSTRUCTED ON A UNIFORM GRADE BETWEEN INVERT ELEVATIONS NOTED ON THE PLANS, UNLESS INDICATED OTHERWISE ON THE PLANS OR DETAILS OR AS DIRECTED BY THE ENGINEER.
6. THIS PROJECT IS ORIENTED TO CONFORM TO THE MARYLAND STATE PLANE COORDINATE SYSTEM, NAD 83/91. THE LOCATION AND ELEVATION OF BENCHMARKS ARE SHOWN ON THE PLANS. ALL ELEVATIONS ARE IN FEET AND ARE BASED ON THE U.S. COAST AND GEODETIC SURVEY MEAN SEA LEVEL DATUM OF 1988 (NAVD 88). THE CONTRACTOR, IN THE CONSTRUCTION-ALIGNMENT PROCESS AND FOR ALL SURVEY OPERATIONS, SHALL USE ONLY BENCHMARKS NOTED AS "NAD-83-91" (HORIZONTAL DATUM) AND "NAVD 88" (VERTICAL DATUM) ON THE CONSTRUCTION PLANS AND IN THE CONSTRUCTION STAKEOUT INFORMATION FOR HORIZONTAL AND VERTICAL LAYOUT. CONTROL POINTS NOT LISTED AS SUCH SHALL BE USED ONLY UPON PRIOR APPROVAL FROM THE MARYLAND TRANSPORTATION AUTHORITY.
7. THE CONTRACTOR SHALL PROTECT AND NOT INTERRUPT EXISTING UTILITY SERVICES UNLESS OTHERWISE NOTED ON THE PLANS OR AUTHORIZED BY THE ENGINEER. SEE UTILITY STATEMENT.
8. REPAIRS TO UTILITIES OR PROPERTY DAMAGE AS A RESULT OF CONTRACTOR'S NEGLIGENCE OR METHOD OF OPERATION SHALL BE MADE AT NO ADDITIONAL COST TO THE MARYLAND TRANSPORTATION AUTHORITY OR OWNER.
9. MATERIAL REMOVED DURING CONSTRUCTION SHALL BECOME THE CONTRACTOR'S PROPERTY UNLESS OTHERWISE NOTED ON THE PLANS OR IN THE SPECIAL PROVISIONS. ALL EXCAVATED ROADWAY MATERIALS, INCLUDING EXISTING PAYMENT, SIDEWALKS, OR COMBINATION CURB AND GUTTER, DETERMINED BY THE ENGINEER TO BE UNSUITABLE FOR USE IN EMBANKMENTS SHALL BE REMOVED FROM THE PROJECT SITE AND DISPOSED OF IN AN APPROVED LOCATION.
10. SAW CUTS WILL NOT BE MEASURED BUT WILL BE INCIDENTAL TO OTHER RELATED ITEMS.
11. THE CONTRACTOR IS RESPONSIBLE TO ENSURE THAT THE SAFETY OF THE PUBLIC AND ALL WORKERS IS MAINTAINED AT ALL TIMES THROUGHOUT THE TERM OF THE CONTRACT. MOTORISTS SHALL BE GUIDED IN A CLEAR AND POSITIVE MANNER WHILE APPROACHING AND PASSING THROUGH CONSTRUCTION WORK/EQUIPMENT AREAS.
12. WHEN A 34 INCH HIGH CONCRETE TRAFFIC BARRIER TRANSITIONS TO A 42 INCH HIGH BARRIER OR VICE VERSA, AS CALLED FOR IN THE PLANS, THERE SHALL BE A CONCRETE TRANSITION SECTION AS SHOWN AND NOTED ON THE PLANS.
13. THE CONTRACTOR IS NOTIFIED THAT CONCURRENT WORK BY OTHERS WILL BE PERFORMED ALONG I-95 NORTH OF THE PROJECT LIMITS.
14. IT SHALL BE THE CONTRACTOR'S RESPONSIBILITY TO VERIFY DIMENSIONS AND ELEVATIONS AFFECTING ALL WORK IN THE FIELD. NO SEPARATE OR ADDITIONAL COMPENSATION WILL BE ALLOWED FOR THIS WORK.
15. ALL STRUCTURES, PIPES, INLETS, ETC. THAT ARE TO REMAIN IN PLACE SHALL BE PROTECTED FROM DAMAGE THROUGHOUT THE DURATION OF THE CONTRACT. ANY DAMAGE TO EXISTING STRUCTURES AND/OR FEATURES SHALL BE REPAIRED AT THE CONTRACTOR'S EXPENSE IN A MANNER APPROVED BY THE ENGINEER.
16. THE CONTRACTOR SHALL REFER TO THE REFERENCE DRAWINGS FOR SUPPLEMENTAL INFORMATION ABOUT EXISTING CONDITIONS. THE DESIGN AND DETAILED DRAWINGS FOR THE EXISTING FACILITIES ARE AVAILABLE FOR PURCHASE UPON REQUEST FROM THE MARYLAND TRANSPORTAION AUTHORITY. THE CONTRACTOR WILL BE SUPPLIED WITH ONE SET OF REFERENCE DRAWINGS AT THE BEGINNING OF THE CONTRACT.
17. THE CONTRACTOR SHALL UTILIZE REFERENCE DRAWINGS TO REVIEW THE PAVEMENT SECTIONS USED FOR THE AT-GRADE PORTIONS OF I-95, NOTING THE DIFFERENCE BETWEEN EXISTING MAINLINE LANES AND SHOULDERS. IN GENERAL, MAINLINE LANE PAVEMENT INCLUDES A COMPOSITE OF CONCRETE OVERLAYED BY HMA, AND SHOULDER PAVEMENT INCLUDES ONLY HMA. THE INTENT OF THIS CONTRACT IS TO COMPLETELY RECONSTRUCT THE EXISTING SHOULDER PAVEMENT WHERE NOTED ON THE ROADWAY PLANS AND TYPICAL SECTIONS. THE CONTRACTOR SHALL BE RESPONSIBLE FOR ENSURING THAT THE AT-GRADE SHOULDERS ARE COMPLETELY RECONSTRUCTED WHERE INDICATED ON THE ROADWAY PLANS AND TYPICAL SECTION. NO EXISTING SHOULDER PAVEMENT SHALL REMAIN WITHIN THE LIMITS OF SHOULDER REPLACEMENT. THE CONTRACTOR IS INFORMED THAT FIELD CONDITIONS MAY VARY FROM THE DIMENSIONS PROVIDED ON THE ROADWAY PLANS AND TYPICAL SECTIONS AND SHALL ADJUST THE WIDTH OF SHOULDER PAVEMENT REPLACEMENT AS NECESSARY.

    THE CONTRACTOR IS RESPONSIBLE FOR VERIFYING EXISTING CONDITIONS, INCLUDING DIMENSIONS PROVIDED IN THESE PLANS. THE CONTRACTOR IS INFORMED THAT EXISTING CONDITIONS COULD VARY FROM THE INFORMATION PROVIDED IN THESE PLANS. DIFFERENCES BETWEEN EXISTING FIELD CONDITIONS AND INFORMATION PROVIDED IN THESE PLANS ARE NOT THE RESPONSIBILITY OF THE AUTHORITY.
18. THE MARYLAND TRANSPORTATION AUTHORITY DOES NOT WARRANT THE CORRECTNESS OF THE TOPOGRAPHIC OR UTILITY DATA PRESENTED HEREIN AND IS NOT RESPONSIBLE FOR ANY CONCLUSIONS DRAWN FROM THE DATA.
19. THE CONTRACTOR IS HEREBY INFORMED OF THE FIRE ALARM SYSTEM MOUNTED TO THE UNDERSIDE OF THE BRIDGE BCW 596-2 SUPERSTRUCTURE BETWEEN SPANS 13 AND 17. IT IS NOT ANTICIPATED THAT CONSTRUCTION ACTIVITIES WILL IMPACT THE SYSTEM; HOWEVER, THE CONTRACTOR SHALL ENSURE THAT THE ALARM SYSTEM IS MAINTAINED THROUGHOUT CONSTRUCTION AND, IF DAMAGED IN ANY WAY BY CONSTRUCTION ACTIVITIES, SHALL BE REPAIRED AT THE CONTRACTOR'S EXPENSE WITHIN A TIME LIMIT DETERMINED BY THE AUTHORITY.

    THE AUTHORITY WILL INSPECT THE FIRE ALARM SYSTEM PRIOR TO THE START OF CONSTRUCTION TO ENSURE IT IS FUNCTIONING PROPERLY.

RK&K
81 MOSHER STREET | BALTIMORE, MD 21217
PH: (410) 728-2900 FAX: (410) 728-5160
Engineers Construction Managers Planners Scientists
www.rkk.com

MARYLAND TRANSPORTATION AUTHORITY
Engineering Division

ADDENDUMS & REVISIONS			
NO.	DESCRIPTION	BY	DATE

I-95 FROM MORAVIA ROAD TO THE FORT McHENRY TUNNEL - PHASE 1 - SOUTHBOUND
I-95 (BALTIMORE CITY)
GENERAL NOTES

DESIGNED BY J.M.R.	DRAWN BY R.W.T.	CHECKED BY K.B.K.
CONST. REVIEW BY	DATE DECEMBER 2009	SCALE AS SHOWN

CONTRACT NO. FT 928-000-006
DRAWING NO. GN-01
SHEET NO. 4 OF 188

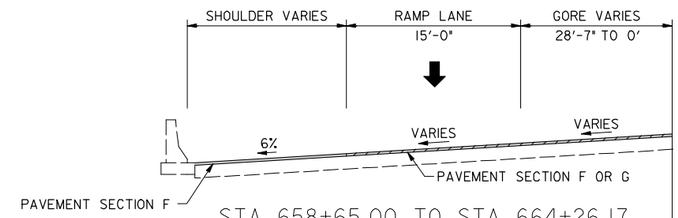

STA. 658+65.00 TO STA. 664+26.17

① VARIES 15' TO 11'-6" FROM STA. 664+26.17 TO STA. 666+36.17

② VARIES 12' TO 11'-6" FROM STA. 658+65.00 TO STA. 659+85.00

③ VARIES 11'-5" TO 2'-10" FROM STA. 659+85.00 TO STA. 665+00.00

④ SEE ROADWAY PLANS FOR LIMITS OF GRIND & RESURFACE AND FULL DEPTH RECONSTRUCTION

⑤ SEE ROADWAY PLANS FOR LIMITS OF GRIND & RESURFACE AND WEDGE/LEVELING

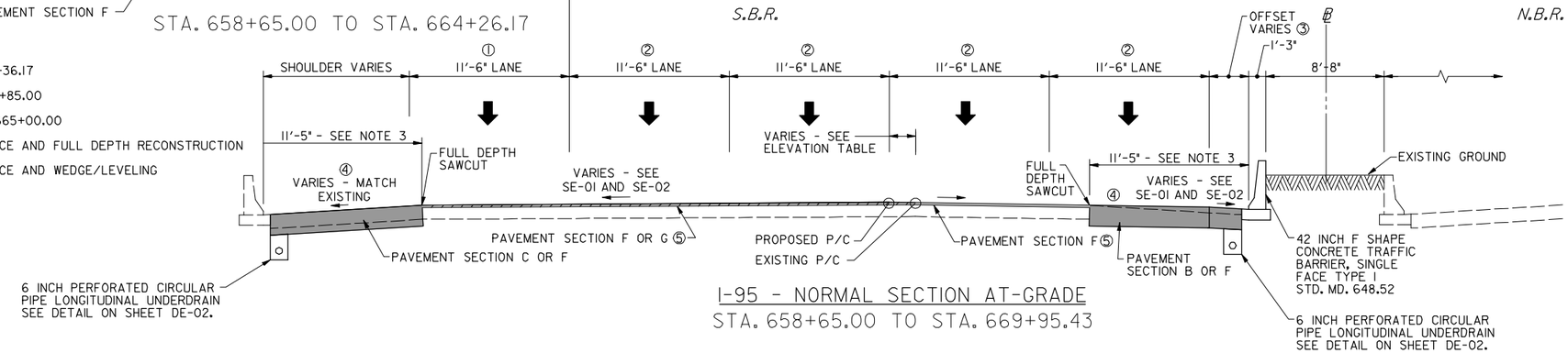

I-95 - NORMAL SECTION AT-GRADE

STA. 658+65.00 TO STA. 669+95.43

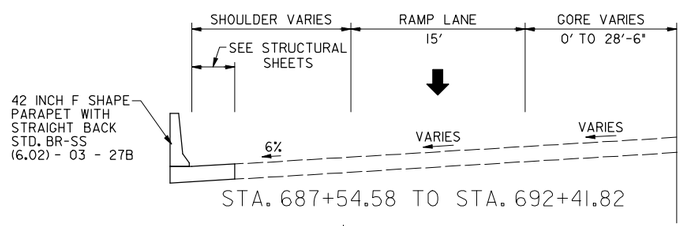

STA. 687+54.58 TO STA. 692+41.82

① VARIES 10'± TO 17'± FROM STA. 682+50 TO STA. 687+54.58

② VARIES 11'-6" TO 15' FROM STA. 685+44.00 TO STA. 687+54.58

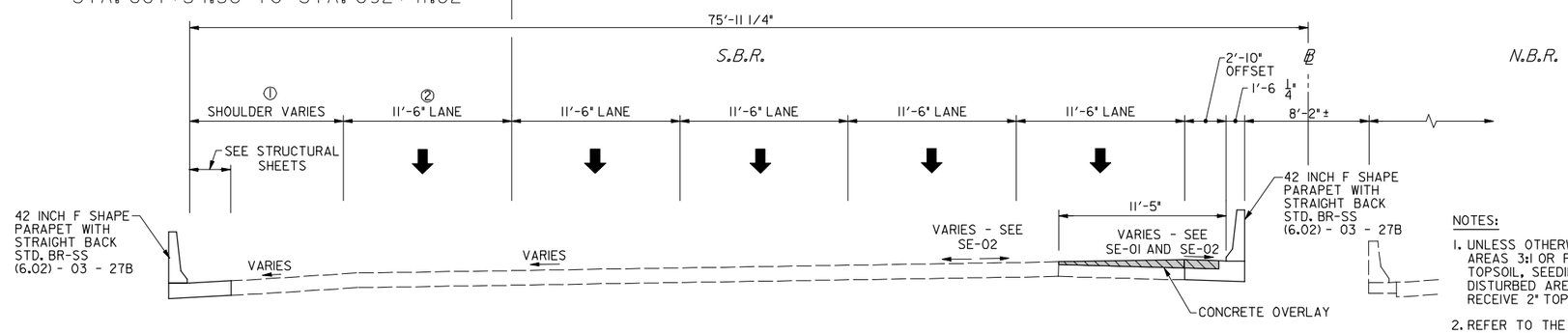

I-95 - NORMAL SECTION ON STRUCTURE

STA. 669+95.43 TO STA. 692+52.06

PAVEMENT LEGEND

- PAVEMENT SECTIONS A,B,C,D AND E FULL DEPTH - SEE DE-1
- PAVEMENT SECTION F GRIND AND OVERLAY - SEE DE-1
- PAVEMENT SECTION G WEDGE AND LEVEL - SEE DE-1
- CONCRETE OVERLAY - SEE STRUCTURAL PLANS

NOTES:

1. UNLESS OTHERWISE NOTED, ANY DISTURBED AREAS 3:1 OR FLATTER SHALL RECEIVE 4" TOPSOIL, SEEDING AND MULCHING. DISTURBED AREAS STEEPER THAN 3:1 SHALL RECEIVE 2" TOPSOIL, SEEDING AND MULCHING.
2. REFER TO THE STRUCTURES PLANS FOR LIMITS OF BRIDGE AND APPROACH SLABS, AS WELL AS DETAILS OF DECK RECONSTRUCTION.
3. THE WIDTH FOR FULL DEPTH SHOULDER REPLACEMENT IS BASED UPON AS-BUILT PLANS FOR EXISTING SHOULDER WIDTH. THE CONTRACTOR SHALL ENSURE THAT THE FULL WIDTH OF EXISTING SHOULDER IS REMOVED IF IT IS DISCOVERED IN THE FIELD THAT THE EXISTING SHOULDER PAVEMENT IS WIDER THAN 11'-5". NO EXISTING SHOULDER PAVEMENT SHALL REMAIN BETWEEN THE EXISTING MAINLINE PAVEMENT AND RECONSTRUCTED SHOULDER PAVEMENT. SEE GENERAL NOTE 17 ON SHEET GN-01 FOR ADDITIONAL DETAILS.

RK&K
81 MOSHER STREET | BALTIMORE, MD 21217
PH: (410) 728-2900 FAX: (410) 728-3160
Engineers Construction Managers Planners Scientists
www.rkk.com

MARYLAND TRANSPORTATION AUTHORITY
Engineering Division

ADDENDUMS & REVISIONS			
NO.	DESCRIPTION	BY	DATE

I-95 FROM MORAVIA ROAD TO THE FORT McHENRY TUNNEL - PHASE 1 - SOUTHBOUND

I-95 (BALTIMORE CITY)

TYPICAL SECTIONS

DESIGNED BY A.J.G.	DRAWN BY R.W.T.	CHECKED BY J.M.R.	
CONST. REVIEW BY	DATE DECEMBER 2009	SCALE 1"=5'-0"	

CONTRACT NO. FT 928-000-006

DRAWING NO. TS-1 of 4

SHEET NO. 5 OF 188

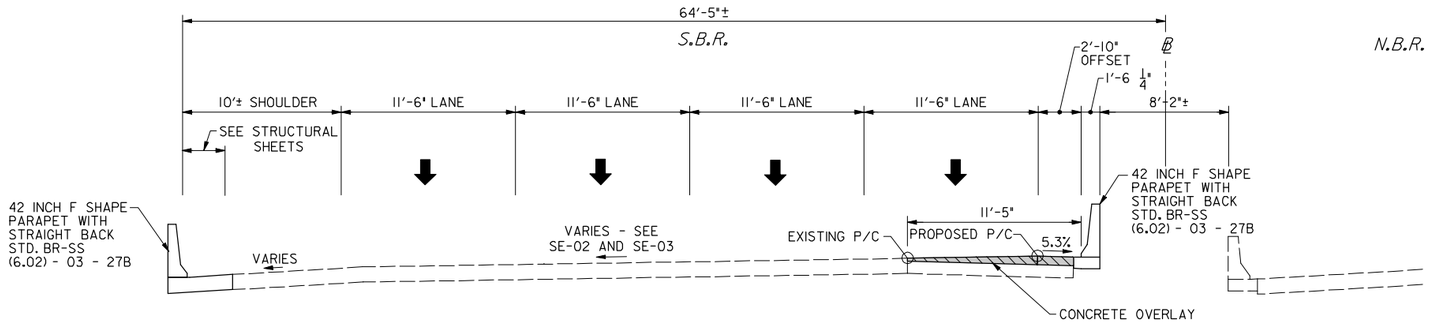

I-95 - NORMAL SECTION ON STRUCTURE

STA. 692+52.06 TO STA. 702+85.46
STA. 707+04.10 TO STA. 711+95.69

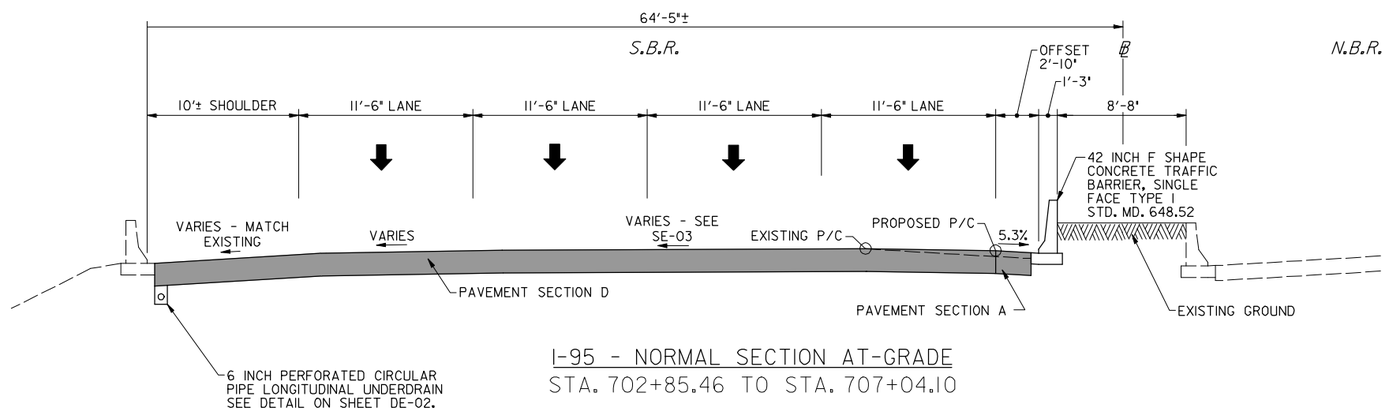

I-95 - NORMAL SECTION AT-GRADE

STA. 702+85.46 TO STA. 707+04.10

PAVEMENT LEGEND

- PAVEMENT SECTIONS A,B,C,D AND E FULL DEPTH - SEE DE-1
- PAVEMENT SECTION F GRIND AND OVERLAY - SEE DE-1
- PAVEMENT SECTION G WEDGE AND LEVEL - SEE DE-1
- CONCRETE OVERLAY - SEE STRUCTURAL PLANS

NOTES:

1. UNLESS OTHERWISE NOTED, ANY DISTURBED AREAS 3:1 OR FLATTER SHALL RECEIVE 4" TOPSOIL, SEEDING AND MULCHING. DISTURBED AREAS STEEPER THAN 3:1 SHALL RECEIVE 2" TOPSOIL, SEEDING AND MULCHING.
2. REFER TO THE STRUCTURES PLANS FOR LIMITS OF BRIDGE AND APPROACH SLABS, AS WELL AS DETAILS OF DECK RECONSTRUCTION.

RK&K
81 MOSHER STREET | BALTIMORE, MD 21217
PH: (410) 728-2900 FAX: (410) 728-3160
Engineers Construction Managers Planners Scientists
www.rkk.com

MARYLAND TRANSPORTATION AUTHORITY
Engineering Division

ADDENDUMS & REVISIONS			
NO.	DESCRIPTION	BY	DATE

I-95 FROM MORAVIA ROAD TO THE FORT McHENRY TUNNEL - PHASE 1 - SOUTHBOUND
I-95 (BALTIMORE CITY)
TYPICAL SECTIONS

CONTRACT NO. FT 928-000-006
DRAWING NO. TS-2 of 4

DESIGNED BY A.J.G. | DRAWN BY R.W.T. | CHECKED BY J.M.R.
CONST. REVIEW BY | DATE DECEMBER 2009 | SCALE 1"=5'-0"
SHEET NO. 6 OF 188

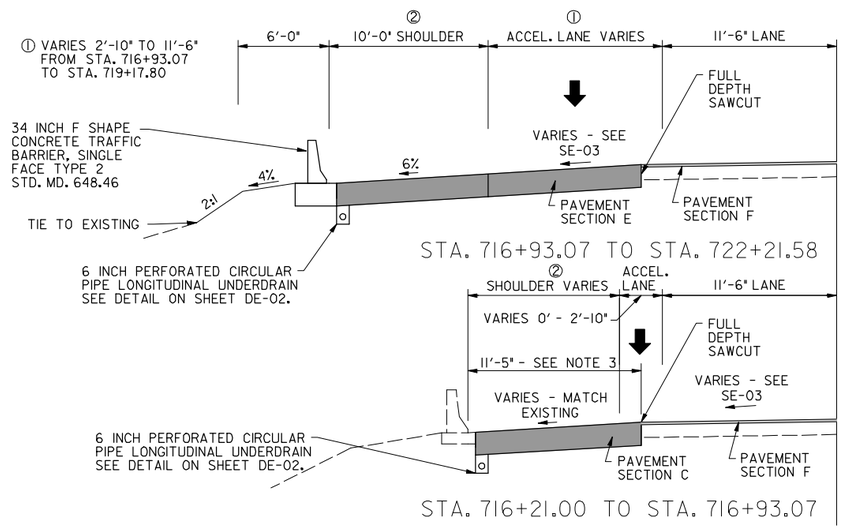

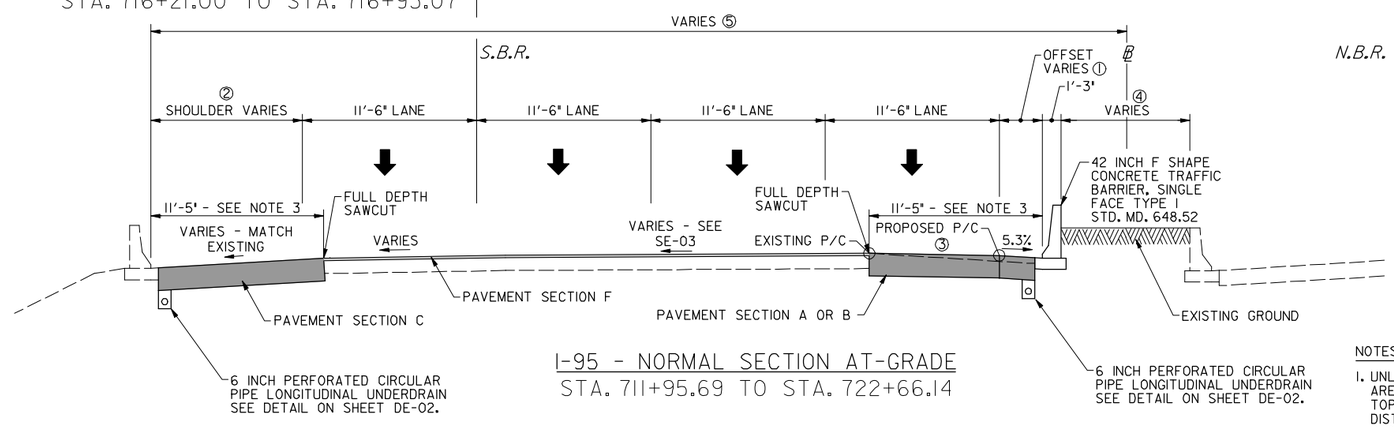

I-95 - NORMAL SECTION AT-GRADE
STA. 711+95.69 TO STA. 722+66.14

① VARIES 2'-10" TO 11'-5" FROM STA. 715+63.22 TO STA. 721+20.49

② VARIES 10'± TO 12'± FROM STA. 715+00 TO STA. 716+21
VARIES 12'± TO 10'± FROM STA. 716+21 TO STA. 716+93.07
10'-0" FROM STA. 716+93.07 TO STA. 722+66.14

③ SEE PLANS FOR LIMITS OF GRIND & RESURFACE AND FULL DEPTH RECONSTRUCTION

④ VARIES 8'-8" TO 27'-2"± FROM STA. 713+35.30 TO STA. 722+66.14

⑤ VARIES 64'-6"± TO 106'-4"± FROM STA. 713+35.30 TO STA. 722+21.58
VARIES 99'-6"± TO 101'-9"± FROM STA. 722+21.58 TO STA. 722+66.14

PAVEMENT LEGEND

- PAVEMENT SECTIONS A,B,C,D AND E FULL DEPTH - SEE DE-1
- PAVEMENT SECTION F GRIND AND OVERLAY - SEE DE-1
- PAVEMENT SECTION G WEDGE AND LEVEL - SEE DE-1
- CONCRETE OVERLAY - SEE STRUCTURAL PLANS

NOTES:

1. UNLESS OTHERWISE NOTED, ANY DISTURBED AREAS 3:1 OR FLATTER SHALL RECEIVE 4" TOPSOIL, SEEDING AND MULCHING. DISTURBED AREAS STEEPER THAN 3:1 SHALL RECEIVE 2" TOPSOIL, SEEDING AND MULCHING.
2. REFER TO THE STRUCTURES PLANS FOR LIMITS OF BRIDGE AND APPROACH SLABS, AS WELL AS DETAILS OF DECK RECONSTRUCTION.
3. THE WIDTH FOR FULL DEPTH SHOULDER REPLACEMENT IS BASED UPON AS-BUILT PLANS FOR EXISTING SHOULDER WIDTH. THE CONTRACTOR SHALL ENSURE THAT THE FULL WIDTH OF EXISTING SHOULDER IS REMOVED IF IT IS DISCOVERED IN THE FIELD THAT THE EXISTING SHOULDER PAVEMENT IS WIDER THAN 11'-5". NO EXISTING SHOULDER PAVEMENT SHALL REMAIN BETWEEN THE EXISTING MAINLINE PAVEMENT AND RECONSTRUCTED SHOULDER PAVEMENT. SEE GENERAL NOTE 17 ON SHEET GN-01 FOR ADDITIONAL DETAILS.

RK&K
81 MOSHER STREET | BALTIMORE, MD 21217
PH: (410) 728-2900 FAX: (410) 728-3160
Engineers Construction Managers Planners Scientists
www.rkk.com

MARYLAND TRANSPORTATION AUTHORITY
Engineering Division

ADDENDUMS & REVISIONS			
NO.	DESCRIPTION	BY	DATE

I-95 FROM MORAVIA ROAD TO THE FORT McHENRY TUNNEL - PHASE 1 - SOUTHBOUND
I-95 (BALTIMORE CITY)
TYPICAL SECTIONS

DESIGNED BY A.J.G.	DRAWN BY R.W.T.	CHECKED BY J.M.R.
CONST. REVIEW BY	DATE DECEMBER 2009	SCALE 1"=5'-0"

CONTRACT NO. FT 928-000-006
DRAWING NO. TS-3 of 4
SHEET NO. 7 OF 188

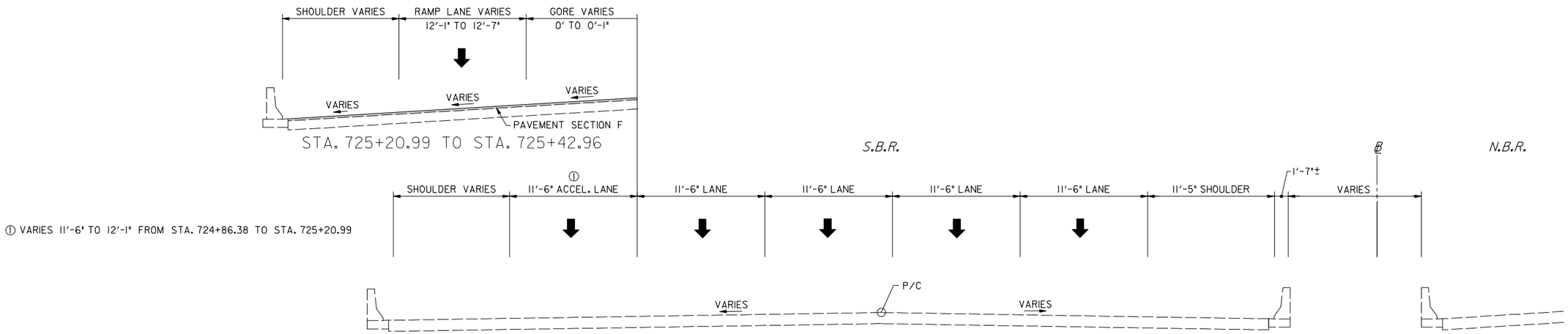

I-95 - NORMAL SECTION ON STRUCTURE
STA. 722+66.14 TO STA. 725+42.96

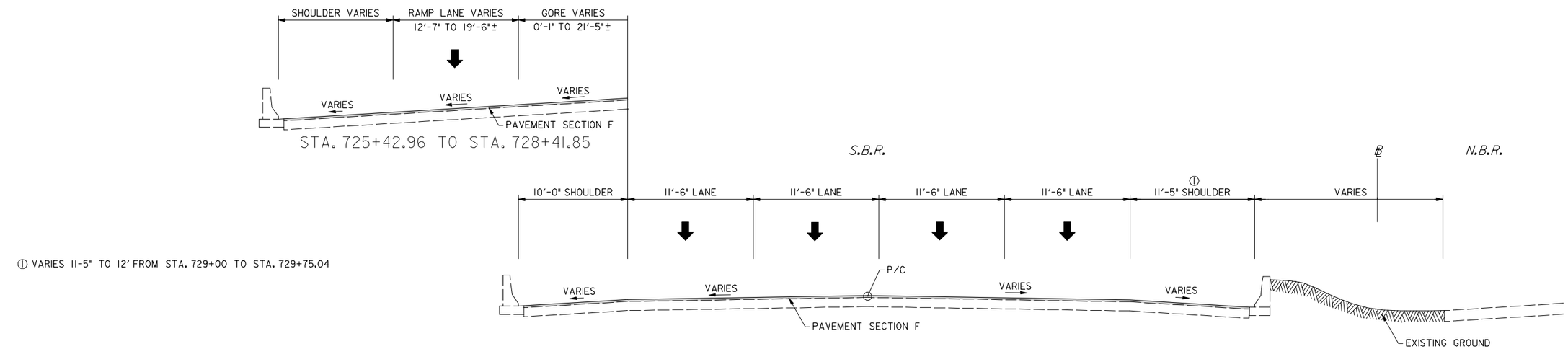

I-95 - NORMAL SECTION AT-GRADE
STA. 725+42.96 TO STA. 729+75.04

PAVEMENT LEGEND

- PAVEMENT SECTIONS A,B,C,D AND E FULL DEPTH - SEE DE-1
- PAVEMENT SECTION F GRIND AND OVERLAY - SEE DE-1
- PAVEMENT SECTION G WEDGE AND LEVEL - SEE DE-1
- CONCRETE OVERLAY - SEE STRUCTURAL PLANS

NOTES:

1. UNLESS OTHERWISE NOTED, ANY DISTURBED AREAS 3:1 OR FLATTER SHALL RECEIVE 4" TOPSOIL, SEEDING AND MULCHING. DISTURBED AREAS STEEPER THAN 3:1 SHALL RECEIVE 2" TOPSOIL, SEEDING AND MULCHING.
2. REFER TO THE STRUCTURES PLANS FOR LIMITS OF BRIDGE AND APPROACH SLABS, AS WELL AS DETAILS OF DECK RECONSTRUCTION.

RK&K
81 MOSHER STREET | BALTIMORE, MD 21217
PH: (410) 728-2900 FAX: (410) 728-3160
Engineers Construction Managers Planners Scientists
www.rkk.com

MARYLAND TRANSPORTATION AUTHORITY
Engineering Division

ADDENDUMS & REVISIONS			
NO.	DESCRIPTION	BY	DATE

I-95 FROM MORAVIA ROAD TO THE FORT McHENRY TUNNEL - PHASE 1 - SOUTHBOUND

I-95 (BALTIMORE CITY)

TYPICAL SECTIONS

DESIGNED BY A.J.G.	DRAWN BY R.W.T.	CHECKED BY J.M.R.	
CONST. REVIEW BY	DATE DECEMBER 2009	SCALE 1"=5'-0"	

CONTRACT NO. FT 928-000-006

DRAWING NO. **TS-4 of 4**

SHEET NO. 8 OF 188

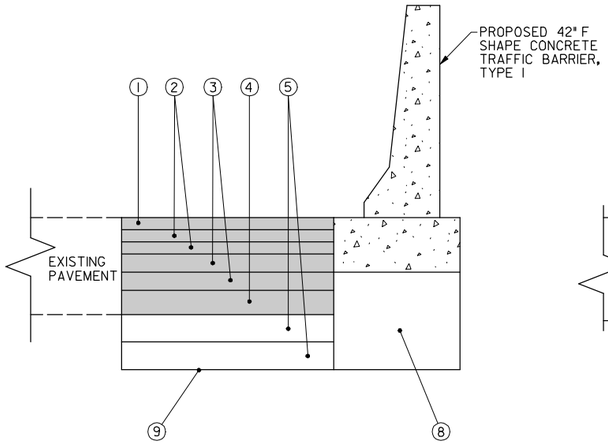

PAVEMENT SECTION A

I-95 SOUTHBOUND MEDIAN

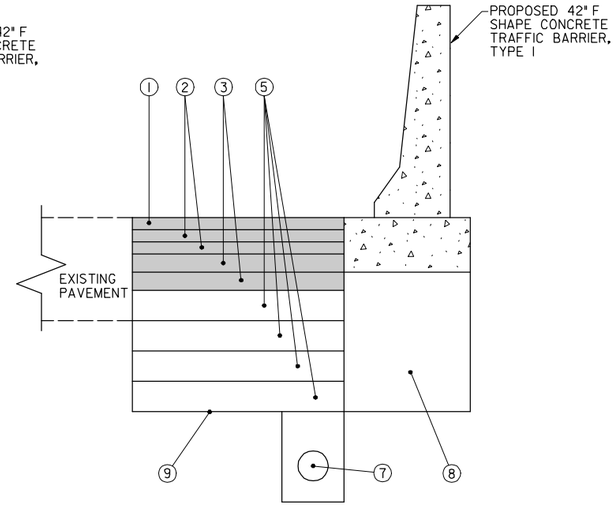

PAVEMENT SECTION B

I-95 SOUTHBOUND MEDIAN

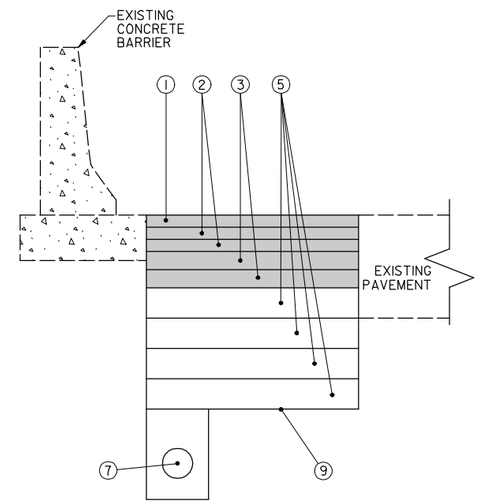

PAVEMENT SECTION C

I-95 SOUTHBOUND OUTSIDE

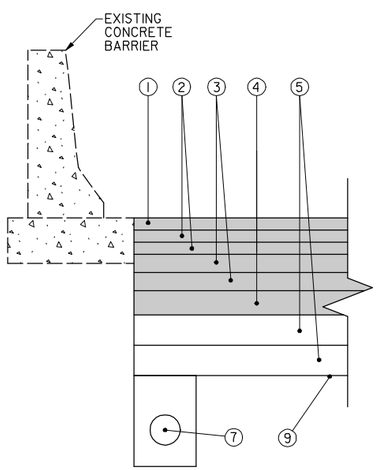

PAVEMENT SECTION D

I-95 SOUTHBOUND WIDENING

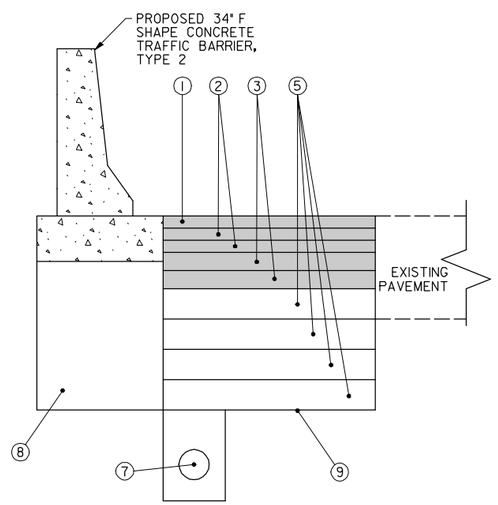

PAVEMENT SECTION E

I-95 SOUTHBOUND WIDENING

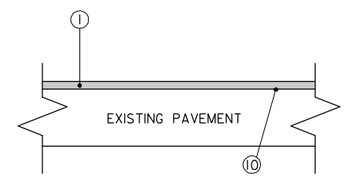

PAVEMENT TYPE F

I-95 SOUTHBOUND

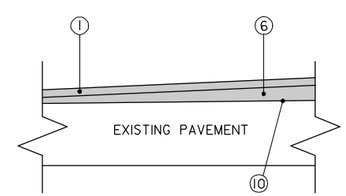

PAVEMENT TYPE G

I-95 SOUTHBOUND

PAVEMENT LEGEND:

1. 2" HOT MIX ASPHALT SUPERPAVE 12.5 MM, PG 76-22, GAP GRADED LEVEL 4.
2. 2" HOT MIX ASPHALT SUPERPAVE 19.0 MM FOR BASE, PG 64-22, LEVEL 4.
3. 3" HOT MIX ASPHALT SUPERPAVE 19.0 MM FOR BASE, PG 64-22, LEVEL 4.
4. 4" HOT MIX ASPHALT SUPERPAVE 19.0 MM FOR BASE, PG 64-22, LEVEL 4.
5. 6" BASE COURSE USING GRADED AGGREGATE.
6. WEDGE/LEVELING
   - A. FOR WEDGE & LEVELING REQUIRING THE PLACEMENT OF BETWEEN 1" TO 3" OF MATERIAL, USE: HOT MIX ASPHALT SUPERPAVE 9.5 MM FOR WEDGE/LEVEL, PG 64-22, LEVEL 4.
   - B. FOR WEDGE & LEVELING REQUIRING THE PLACEMENT OF 3" OR MORE OF MATERIAL, USE: HOT MIX ASPHALT SUPERPAVE 19.0 MM FOR WEDGE/LEVEL, PG 64-22, LEVEL 4. (2-INCH MINIMUM LIFT AND 4-INCH MAXIMUM LIFT THICKNESS)
7. 6" PERFORATED CIRCULAR PIPE LONGITUDINAL UNDERDRAIN (SEE MD STANDARD 387.01). SEE SCHEDULE AND DETAIL ON SHEET DE-02.
8. BASE COURSE USING GRADED AGGREGATE INCIDENTAL TO THE COST OF F SHAPE CONCRETE TRAFFIC BARRIER.
9. TOP OF SUBGRADE AND LIMIT OF CLASS 1 OR CLASS 2 EXCAVATION - SEE NOTE 1.
10. TOP OF EXISTING PAVEMENT AFTER 2-INCH GRINDING - SEE NOTE 2.

NOTE:

1. IN LOCATIONS WHERE THE ENGINEER DETERMINES THAT THE EXISTING SUBGRADE IS UNSUITABLE, THE CONTRACTOR SHALL:
   - A. EXCAVATE THE EXISTING SUBGRADE TO A DEPTH 2' BELOW THE PROPOSED BOTTOM OF GRADED AGGREGATE. THE EXCAVATED MATERIAL WILL BE CLASS 1A.
   - B. PLACE GEOSYNTHETIC STABILIZED SUBGRADE USING GRADED AGGREGATE BASE (GSSA) TO THE BOTTOM ELEVATION OF GRADED AGGREGATE. (SEE STD. MD. 211)

   THE CONTRACTOR SHALL ASSUME THAT THE EXISTING SUBGRADE UNDER SOUTHBOUND I-95 BETWEEN BRIDGES BCW 596-2 AND BCW 598-2 (APPROX. STA. 702+85 TO STA. 707+05) IS UNSUITABLE.
2. IN LOCATIONS WHERE AT-GRADE PAVEMENT IS NOT BEING REMOVED AND REPLACED, GRIND 2 INCHES OF THE EXISTING PAVEMENT ON SOUTHBOUND I-95. DO NOT GRIND ANY CONCRETE PAVEMENT SURFACES.
3. SEE SHEET DE-02 FOR LONGITUDINAL UNDERDRAIN DETAILS AND SCHEDULE.

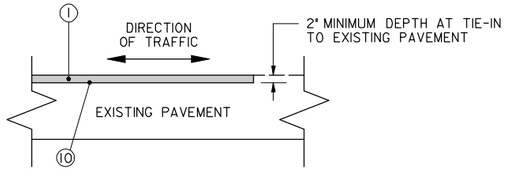

RESURFACING TIE-IN DETAIL

I-95 SOUTHBOUND AND RAMPS

RK&K
81 MOSHER STREET | BALTIMORE, MD 21217
PH: (410) 728-2900 FAX: (410) 728-3160
Engineers Construction Managers Planners Scientists
www.rkk.com

MARYLAND TRANSPORTATION AUTHORITY
Engineering Division

ADDENDUMS & REVISIONS			
NO.	DESCRIPTION	BY	DATE

I-95 FROM MORAVIA ROAD TO THE FORT McHENRY TUNNEL - PHASE 1 - SOUTHBOUND

I-95 (BALTIMORE CITY)

PAVEMENT DETAILS

DESIGNED BY J.M.R.	DRAWN BY R.W.T.	CHECKED BY J.M.R.
CONST. REVIEW BY	DATE DECEMBER 2009	SCALE NOT TO SCALE

CONTRACT NO. FT 928-000-006

DRAWING NO. **DE-1 of 2**

SHEET NO. 9 OF 188

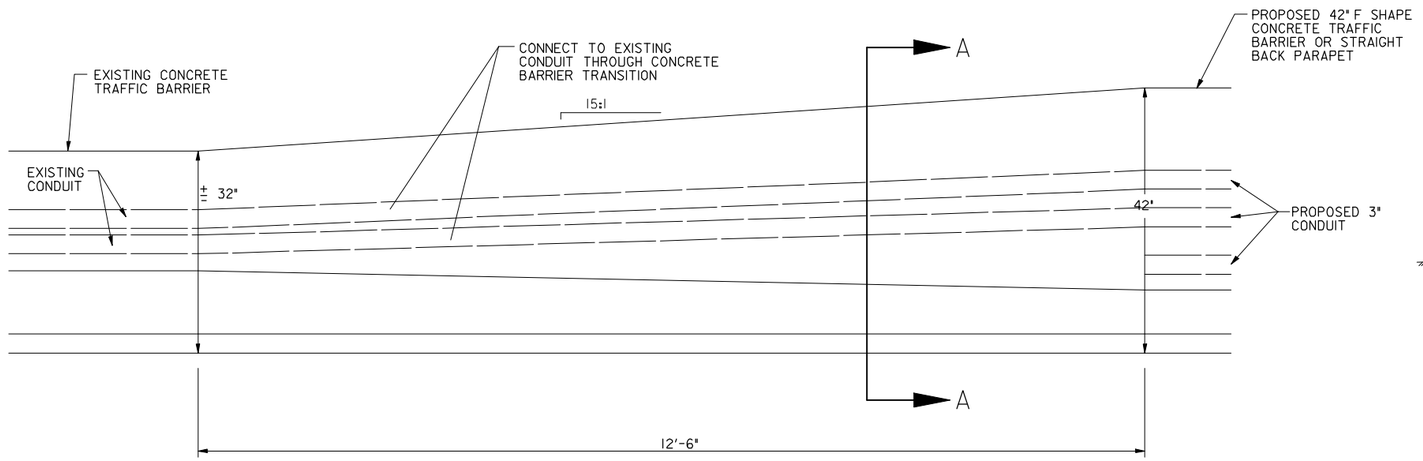

CONCRETE TRAFFIC BARRIER TRANSITION - PROFILE VIEW

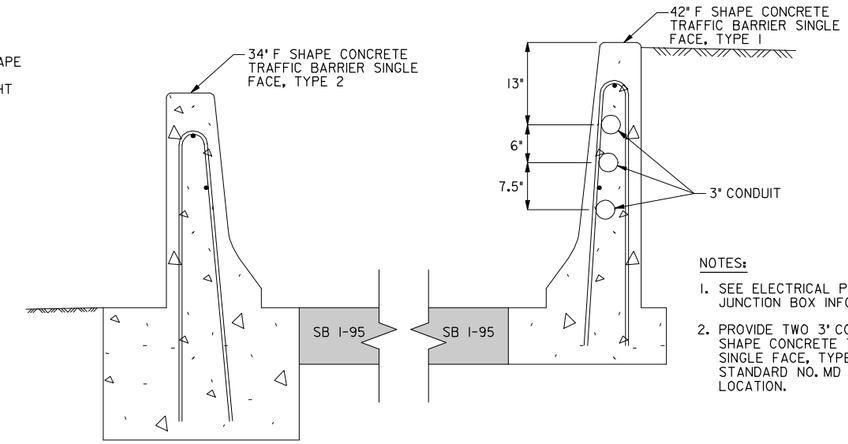

OUTSIDE BARRIER

MEDIAN BARRIER WITH CONDUITS

NOTES:

1. SEE ELECTRICAL PLAN SHEET E-1 FOR JUNCTION BOX INFORMATION.
2. PROVIDE TWO 3" CONDUITS IN THE 34" F SHAPE CONCRETE TRAFFIC BARRIER SINGLE FACE, TYPE 2. REFER TO SHA STANDARD NO. MD 648.50 FOR CONDUIT LOCATION.

6 INCH PERFORATED CIRCULAR PIPE LONGITUDINAL UNDERDRAIN SCHEDULE

LOCATION ALONG SB I-95	LENGTH	COMMENTS
STA. 660+00 TO STA. 661+67, MEDIAN	167 LF	TIE TO EXISTING UNDERDRAIN AT STA. 660+00
STA. 661+73 TO STA. 664+17, MEDIAN	244 LF	OUTLET TO PROPOSED INLET I-4 AT STA. 661+73
STA. 664+23 TO STA. 666+67, MEDIAN	244 LF	OUTLET TO PROPOSED INLET I-5 AT STA. 664+23
STA. 666+73 TO STA. 668+97, MEDIAN	244 LF	OUTLET TO PROPOSED INLET I-6 AT STA. 666+73
STA. 669+03 TO STA. 669+95, MEDIAN	92 LF	OUTLET TO PROPOSED INLET I-7 AT STA. 669+03
STA. 666+00 TO STA. 666+67, OUTSIDE	67 LF	TIE TO EXISTING UNDERDRAIN AT STA. 666+00
STA. 666+73 TO STA. 668+97, OUTSIDE	244 LF	OUTLET TO EXISTING INLET EX I-107 AT STA. 666+73
STA. 669+03 TO STA. 669+32, OUTSIDE	29 LF	OUTLET TO EXISTING INLET EX I-109 AT STA. 669+03
STA. 702+98 TO STA. 706+71, OUTSIDE	373 LF	OUTLET TO EXISTING INLET EX I-111 AT STA. 702+98
STA. 712+00 TO STA. 714+87, OUTSIDE	287 LF	OUTLET TO EXISTING INLET AT STA. 714+87
STA. 714+93 TO STA. 718+86, OUTSIDE	393 LF	OUTLET TO PROPOSED INLET I-2 AT STA. 718+86
STA. 718+92 TO STA. 721+71, OUTSIDE	279 LF	OUTLET TO PROPOSED INLET I-3 AT STA. 721+71
STA. 715+63 TO STA. 718+89, MEDIAN	326 LF	OUTLET TO PROPOSED INLET I-10 AT STA. 718+89
STA. 718+95 TO STA. 721+00, MEDIAN	205 LF	TIE TO EXISTING UNDERDRAIN AT STA. 721+00

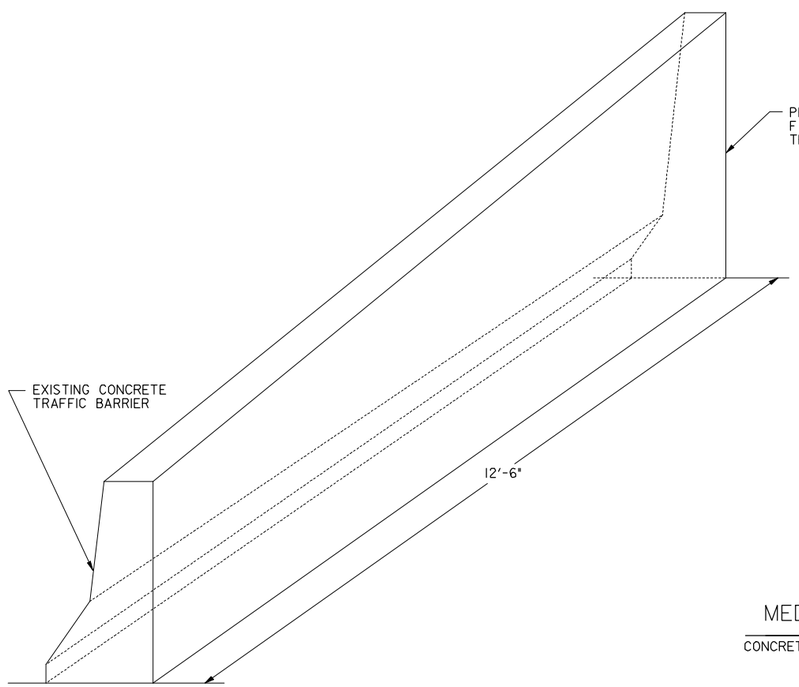

CONCRETE TRAFFIC BARRIER TRANSITION - ORTHOGRAPHIC VIEW

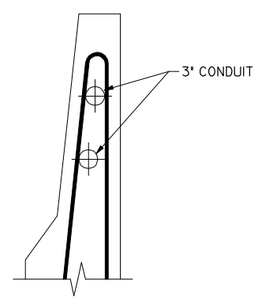

MEDIAN SECTION A-A

CONCRETE TRAFFIC BARRIER TRANSITION

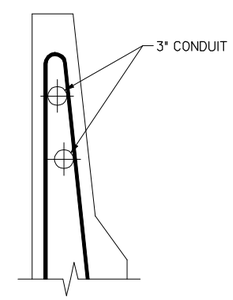

OUTSIDE SECTION A-A

CONCRETE TRAFFIC BARRIER TRANSITION

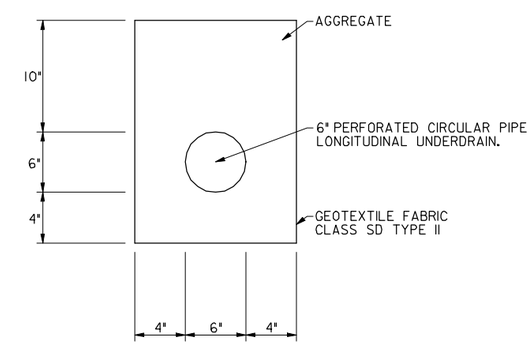

LONGITUDINAL UNDERDRAIN DETAIL

SEE SHA STANDARD NO. MD 387.11 FOR ADDITIONAL DETAILS

RK&K
81 MOSHER STREET | BALTIMORE, MD 21217
PH: (410) 728-2900 FAX: (410) 728-3160
Engineers Construction Managers Planners Scientists
www.rkk.com

MARYLAND TRANSPORTATION AUTHORITY
Engineering Division

ADDENDUMS & REVISIONS

NO.	DESCRIPTION	BY	DATE

I-95 FROM MORAVIA ROAD TO THE FORT McHENRY TUNNEL - PHASE 1 - SOUTHBOUND

I-95 (BALTIMORE CITY)

CONCRETE BARRIER AND UNDERDRAIN DETAILS

CONTRACT NO. FT 928-000-006

DRAWING NO. DE-2 of 2

DESIGNED BY A.J.G. | DRAWN BY R.W.T. | CHECKED BY J.M.R.

CONST. REVIEW BY | DATE DECEMBER 2009 | SCALE NOT TO SCALE

SHEET NO. 10 OF 188

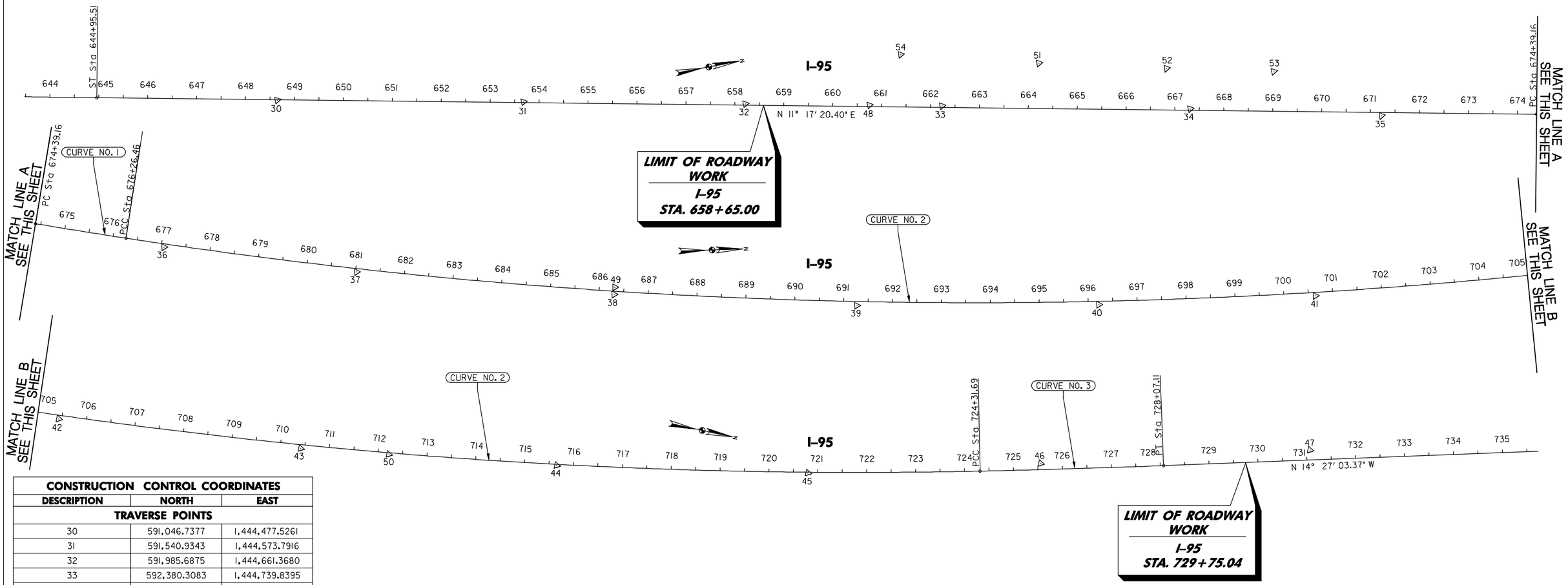

CONSTRUCTION CONTROL COORDINATES		
DESCRIPTION	NORTH	EAST
TRAVERSE POINTS		
30	591,046.7377	1,444,477.5261
31	591,540.9343	1,444,573.7916
32	591,985.6875	1,444,661.3680
33	592,380.3083	1,444,739.8395
34	592,877.7193	1,444,839.4855
35	593,259.4749	1,444,925.4136
36	593,832.2718	1,445,037.2172
37	594,224.3853	1,445,100.1858
38	594,748.9769	1,445,163.0813
39	595,244.1289	1,445,201.6819
40	595,738.5840	1,445,215.1130
41	596,181.7305	1,445,210.8635
42	596,660.6838	1,445,187.7127
43	597,156.8620	1,445,141.6048
44	597,675.7356	1,445,064.3194
45	598,180.8811	1,444,970.2679
46	598,641.5312	1,444,850.0163
47	599,173.4579	1,444,706.4440
48	592,234.7233	1,444,710.8895
49	594,750.8990	1,445,148.5104
50	597,335.3276	1,445,115.0226
51	592,590.9576	1,444,690.5758
52	592,845.4327	1,444,749.0556
53	593,059.5481	1,444,795.6850
54	592,316.5801	1,444,621.0537

BASELINE CONTROL COORDINATES			
CURVE	STATION	NORTH	EAST
SPIRAL TO TANGENT POINT	ST 644+95.51	590,684.8339	1,444,404.6576
CURVE NO. 1	PC 674+39.16	593,571.5282	1,444,980.8998
	PI 675+32.81	593,663.3670	1,444,999.2327
	PCC 676+26.46	593,755.4428	1,445,016.3353
CURVE NO. 2	PCC 676+26.46	593,755.4428	1,455,016.3353
	PI 700+64.94	596,152.9143	1,445,461.6530
	PCC 724+31.69	598,523.8942	1,444,891.8886
CURVE NO. 3	PCC 724+31.69	598,523.8942	1,444,891.8886
	PI 726+19.40	598,706.4107	1,444,848.0284
	PT 728+07.11	598,888.1844	1,444,801.1846

CURVE DATA						
CURVE	DELTA	Dc	RADIUS	TANGENT	LENGTH	EXTERNAL
1	0° 45′59.51"	0° 24′33.32"	14,000.00′	93.65′	187.30′	0.31′
2	24° 02′05.52"	0° 30′00.65"	11,455.00′	2,438.48′	4,805.23′	256.67′
3	0° 56′18.75"	0° 15′00.00"	22,918.31′	187.71′	375.42′	0.77′

NOTES:

1. SEE SHEETS SE-01 THROUGH SE-03 FOR SUPERELEVATION INFORMATION.
2. STA. 729+75.04 IS EQUIVALENT TO STA. 2493+00 IN CONTRACT KH-1502-000-006. SEE SHEET PS-7.

Scale In Feet
100 0 100 200

RK&K
81 MOSHER STREET | BALTIMORE, MD 21217
PH: (410) 728-2900 FAX: (410) 728-3160
Engineers Construction Managers Planners Scientists
www.rkk.com

MARYLAND TRANSPORTATION AUTHORITY
Engineering Division

ADDENDUMS & REVISIONS			
NO.	DESCRIPTION	BY	DATE

I-95 FROM MORAVIA ROAD TO THE FORT McHENRY TUNNEL - PHASE 1 - SOUTHBOUND
I-95 (BALTIMORE CITY)
GEOMETRY SHEET

CONTRACT NO. FT 928-000-006
DRAWING NO. GS-01

DESIGNED BY J.M.R. | DRAWN BY R.W.T. | CHECKED BY K.B.K.
CONST. REVIEW BY | DATE DECEMBER 2009 | SCALE AS SHOWN
SHEET NO. 11 OF 188

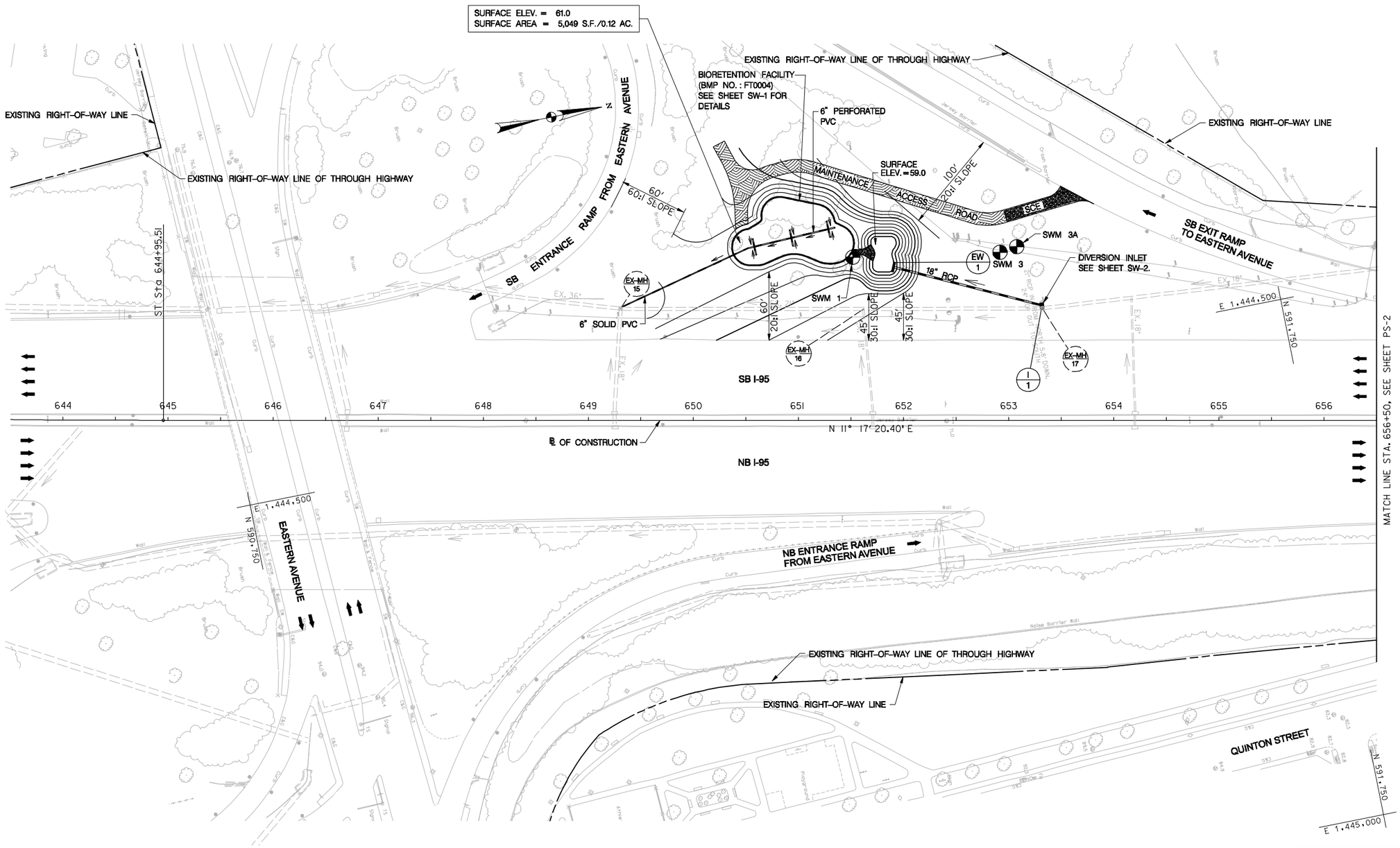

CROSS REFERENCE	DWG. NO.
GEOMETRIC LAYOUT	GS-1
TRAFFIC CONTROL	MT-2, MT-10
STORMWATER MANAGEMENT	SW-1 - SW-2
EROSION AND SEDIMENT CONTROL	ES-1
LANDSCAPING	LA-1 - LA-3
BORING LOGS	SO-2

STORM DRAIN STRUCTURE AND PIPE SCHEDULE

STRUCTURE	STATION	OFFSET	TYPE	STD. NO.	REMARKS
I-1	653+32	109' LT	TYPE "S" DOUBLE GRATE INLET	SEE SW-2	DIVERSION INLET
EW-1	651+90	146' LT	TYPE "C" ENDWALL	354.01	NEW

PIPE	FROM	TO	LENGTH (LF)	INV. IN	INV. OUT
18" RCP	651+90	653+32	146	I-1 – 60.48	EW-1 – 59.00

STATIONING AND OFFSETS ARE MEASURED TO THE CENTER OF THE INLET/SCUPPER ALONG THE FACE OF THE CONCRETE BARRIER/PARAPET, AND TO THE INVERTS OF THE PIPE

SCALE IN FEET
50 0 50 100

LEGEND
- FULL DEPTH PAVEMENT
- CONCRETE OVERLAY
- GRIND AND RESURFACE
- WEDGE AND LEVEL
- SWM ACCESS ROAD
- I/201 – PROPOSED INLET/SCUPPER
- EX-I/8 – EXISTING INLET

RK&K
81 MOSHER STREET | BALTIMORE, MD 21217
PH: (410) 728-2900 FAX: (410) 728-3160
Engineers Construction Managers Planners Scientists
www.rkk.com

MARYLAND TRANSPORTATION AUTHORITY
Engineering Division

ADDENDUMS & REVISIONS

NO.	DESCRIPTION	BY	DATE

I-95 FROM MORAVIA ROAD TO THE FORT McHENRY TUNNEL - PHASE 1 - SOUTHBOUND

I-95 (BALTIMORE CITY)

ROADWAY PLAN

CONTRACT NO. FT 928-000-006

DRAWING NO. **PS-1 of 7**

DESIGNED BY J.M.R. | DRAWN BY R.W.T. | CHECKED BY K.B.K.

CONST. REVIEW BY | DATE DECEMBER 2009 | SCALE AS SHOWN

SHEET NO. 12 OF 188

TO FORT McHENRY TUNNEL

TO WHITE MARSH

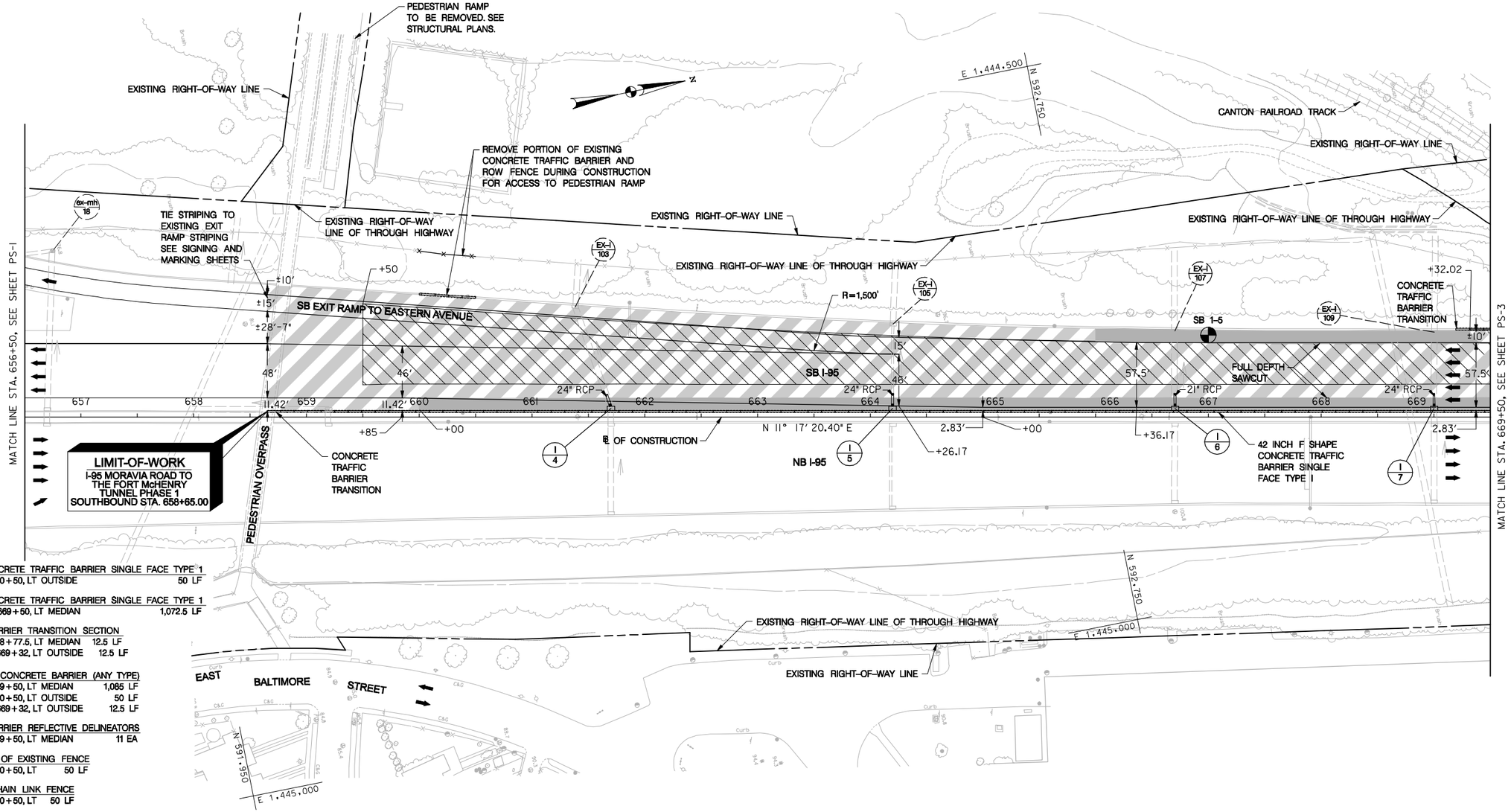

34 INCH F SHAPE CONCRETE TRAFFIC BARRIER SINGLE FACE TYPE 1
STA. 660+00 TO STA. 660+50, LT OUTSIDE 50 LF

42 INCH F SHAPE CONCRETE TRAFFIC BARRIER SINGLE FACE TYPE 1
STA. 658+77.5 TO STA. 669+50, LT MEDIAN 1,072.5 LF

CONCRETE TRAFFIC BARRIER TRANSITION SECTION
STA. 658+65 TO STA. 658+77.5, LT MEDIAN 12.5 LF
STA. 669+19.5 TO STA. 669+32, LT OUTSIDE 12.5 LF

REMOVAL OF EXISTING CONCRETE BARRIER (ANY TYPE)
STA. 658+65 TO STA. 669+50, LT MEDIAN 1,085 LF
STA. 660+00 TO STA. 660+50, LT OUTSIDE 50 LF
STA. 669+19.5 TO STA. 669+32, LT OUTSIDE 12.5 LF

CONCRETE TRAFFIC BARRIER REFLECTIVE DELINEATORS
STA. 658+65 TO STA. 669+50, LT MEDIAN 11 EA

REMOVE AND DISPOSE OF EXISTING FENCE
STA. 660+00 TO STA. 660+50, LT 50 LF

8 FOOT GALVANIZED CHAIN LINK FENCE
STA. 660+00 TO STA. 660+50, LT 50 LF

TERMINAL POST FOR 8 FOOT GALVANIZED CHAIN LINK FENCE
STA. 660+00 TO STA. 660+50, LT 4 EA

CROSS REFERENCE	DWG. NO.
TYPICAL SECTION	TS-1
GEOMETRIC LAYOUT	GS-1
SUPERELVATION TABLE	SE-01 – SE-02
TRAFFIC CONTROL	MT-3, MT-11, MT-17
PIPE PROFILES	PP-1, PP-2
EROSION AND SEDIMENT CONTROL	ES-2 ,ES-8
STRUCTURES	S-1,S-5 - S-29,S-43 - S-46
SIGNING AND MARKING	SN-2.1, SN-3.1, SN-9
ELECTRICAL / UTILITIES / LIGHTING	E-2
LANDSCAPING	LA-4
BORING LOGS	SO-1

STORM DRAIN STRUCTURE AND PIPE SCHEDULE

STRUCTURE	STATION	OFFSET	TYPE	STD. NO.	REMARKS
I-4	661+70	5.5' LT	TYPE "S-1" COMB. DOUBLE GRATE INLET	SEE PP-3	NEW
I-5	664+20	5.5' LT	MOD. TYPE "S-1" COMB. DOUBLE GRATE INLET	SEE PP-3	NEW
I-6	666+70	5.5' LT	MOD. TYPE "S-1" COMB. DOUBLE GRATE INLET	SEE PP-3	NEW
I-7	669+00	5.5' LT	MOD. TYPE "S-1" COMB. DOUBLE GRATE INLET	SEE PP-3	NEW

PIPE	FROM	TO	LENGTH (LF)	INV. IN	INV. OUT
24" RCP	661+66	661+70	8	I-4 – 81.21	TIE TO EX. PIPE
24" RCP	664+20	664+20	8	I-5 – 86.21	TIE TO EX. PIPE
21" RCP	666+70	666+70	8	I-6 – 92.88	TIE TO EX. PIPE
24" RCP	669+00	669+00	8	I-7 – 96.33	TIE TO EX. PIPE

STATIONING AND OFFSETS ARE MEASURED TO THE CENTER OF THE INLET/SCUPPER ALONG THE FACE OF THE CONCRETE BARRIER/PARAPET, AND TO THE INVERTS OF THE PIPE

PIPE LENGTH IS BASED ON ASSUMED FIELD CONDITIONS. SEE PP-1 TO PP-3 FOR ADDITIONAL DETAILS ON PIPE REMOVAL AND REPLACEMENT. CONTRACTOR SHALL PIPE REPLACEMENT BASED ON NOTES AND PLANS SHOWN ON PP-1 TO PP-3

SCALE IN FEET
50 0 50 100

NOTES:

1. SEE NOTE 3 ON TS-1 AND GENERAL NOTE 17 ON SHEET GN-01 FOR FULL DEPTH SHOULDER REPLACEMENT.

LEGEND

- FULL DEPTH PAVEMENT
- CONCRETE OVERLAY
- GRIND AND RESURFACE
- WEDGE AND LEVEL
- SWM ACCESS ROAD
- I/201 – PROPOSED INLET/SCUPPER
- EX-I/8 – EXISTING INLET

RK&K
81 MOSHER STREET | BALTIMORE, MD 21217
PH: (410) 728-2900 FAX: (410) 728-3160
Engineers Construction Managers Planners Scientists
www.rkk.com

MARYLAND TRANSPORTATION AUTHORITY
Engineering Division

ADDENDUMS & REVISIONS			
NO.	DESCRIPTION	BY	DATE

I-95 FROM MORAVIA ROAD TO THE FORT McHENRY TUNNEL - PHASE 1 - SOUTHBOUND

I-95 (BALTIMORE CITY)

ROADWAY PLAN

CONTRACT NO. FT 928-000-006

DRAWING NO. PS-2 of 7

DESIGNED BY J.M.R. | DRAWN BY R.W.T. | CHECKED BY K.B.K.

CONST. REVIEW BY | DATE DECEMBER 2009 | SCALE AS SHOWN

SHEET NO. 13 OF 188

TO FORT McHENRY TUNNEL

TO WHITE MARSH

CURVE NO. 1

P.I. N 593,663.3670
E 1,444,999.2327
△ = 0°-45'-59.51"
Dc = 0°-24'-33.32"
R = 14,000.00'
L = 187.30'
T = 93.65'
E = 0.31'
S/E = SEE SUPERELEVATION CHART

CURVE NO. 2

P.I. N 596,152.9143
E 1,445,461.6530
△ = 24°-02'-05.52"
Dc = 0°-30'-00.65"
R = 11,455.00'
L = 4,805.23'
T = 2,438.48'
E = 256.67'
S/E = SEE SUPERELEVATION CHART

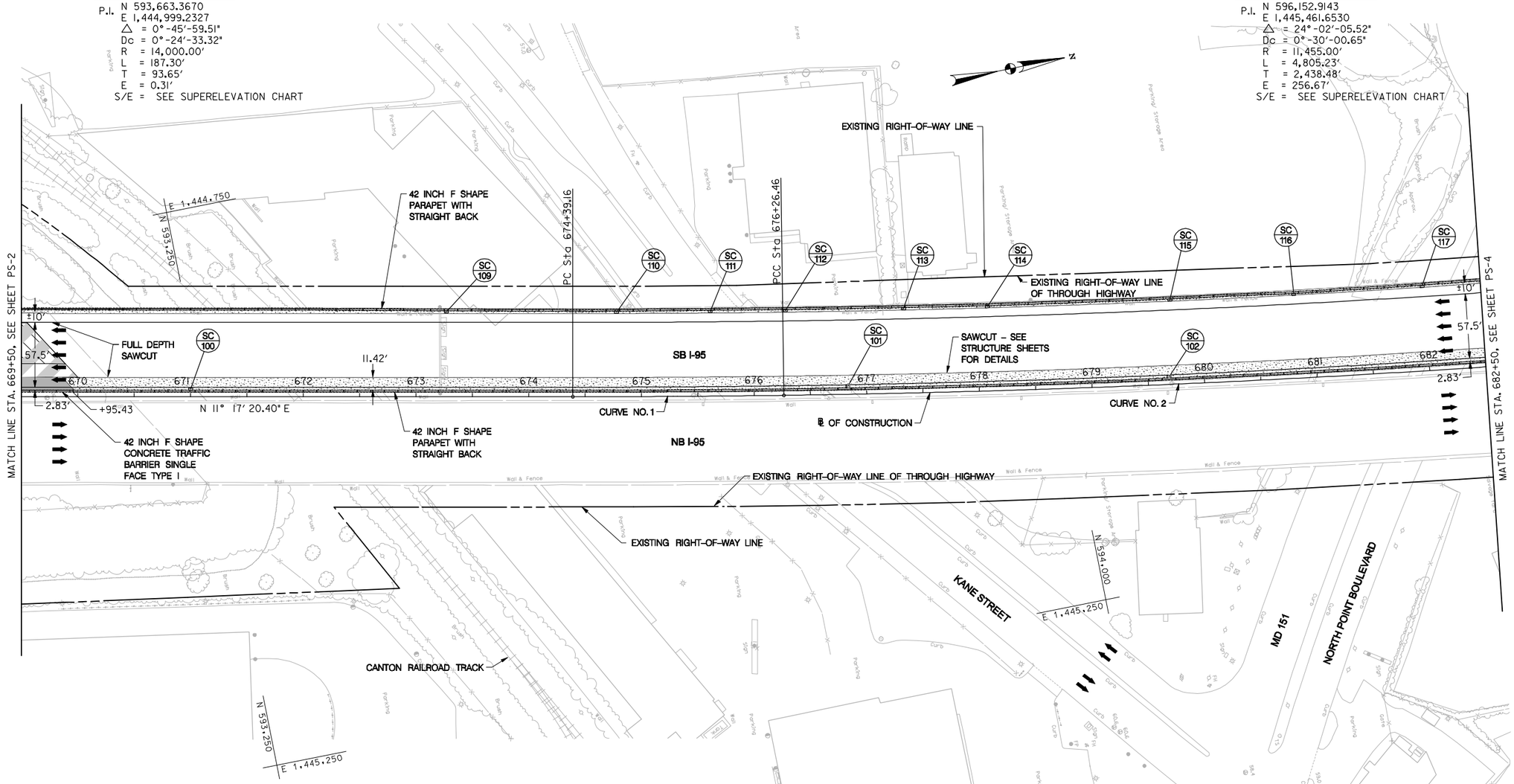

42 INCH F SHAPE CONCRETE TRAFFIC BARRIER SINGLE FACE TYPE 1
STA. 669+50 TO STA. 669+96, LT MEDIAN 46 LF

REMOVAL OF EXISTING CONCRETE BARRIER (ANY TYPE)
STA. 669+50 TO STA. 669+96, LT MEDIAN 46 LF

CONCRETE TRAFFIC BARRIER REFLECTIVE DELINEATORS
STA. 669+50 TO STA. 682+50, LT MEDIAN 13 EA
STA. 669+50 TO STA. 682+50, LT OUTSIDE 13 EA

CROSS REFERENCE	DWG. NO.
TYPICAL SECTION	TS-1
GEOMETRIC LAYOUT	GS-1
SUPERELVATION TABLE	SE-01, SE-02
TRAFFIC CONTROL	MT-4, MT-12, MT-18
EROSION AND SEDIMENT CONTROL	ES-3, ES-9
STRUCTURES	S-1,S-2,S-5 - S-29
SIGNING AND MARKING	SN2.2
ELECTRICAL / UTILITIES / LIGHTING	E-3

STORM DRAIN STRUCTURE SCHEDULE

STRUCTURE	STATION	OFFSET	TYPE	STD. NO.	REMARKS
SC-100	671+00	5.7' LT	MOD TYPE IV BRIDGE SCUPPER	SEE SHEET S-16	NEW
SC-101	676+83	5.8' LT	MOD TYPE IV BRIDGE SCUPPER	SEE SHEET S-16	NEW
SC-102	679+69	5.7' LT	MOD TYPE IV BRIDGE SCUPPER	SEE SHEET S-16	NEW
SC-109	673+27	76.2' LT	MOD TYPE IV BRIDGE SCUPPER	SEE SHEET S-16	NEW
SC-110	674+78	76' LT	MOD TYPE IV BRIDGE SCUPPER	SEE SHEET S-16	NEW
SC-111	675+62	76.2' LT	MOD TYPE IV BRIDGE SCUPPER	SEE SHEET S-16	NEW
SC-112	676+29	76.1' LT	MOD TYPE IV BRIDGE SCUPPER	SEE SHEET S-16	NEW
SC-113	677+34	75.9' LT	MOD TYPE IV BRIDGE SCUPPER	SEE SHEET S-16	NEW
SC-114	678+09	75.8' LT	MOD TYPE IV BRIDGE SCUPPER	SEE SHEET S-16	NEW
SC-115	679+72	75.8' LT	MOD TYPE IV BRIDGE SCUPPER	SEE SHEET S-16	NEW
SC-116	680+83	75.6' LT	MOD TYPE IV BRIDGE SCUPPER	SEE SHEET S-16	NEW
SC-117	681+98	76' LT	MOD TYPE IV BRIDGE SCUPPER	SEE SHEET S-16	NEW

STATIONING AND OFFSETS ARE MEASURED TO THE CENTER OF THE INLET/SCUPPER ALONG THE FACE OF THE CONCRETE BARRIER/PARAPET, AND TO THE INVERTS OF THE PIPE

NOTES:

1. SEE NOTE 3 ON TS-1 AND GENERAL NOTE 17 ON SHEET GN-01 FOR FULL DEPTH SHOULDER REPLACEMENT.

LEGEND

- FULL DEPTH PAVEMENT
- CONCRETE OVERLAY
- GRIND AND RESURFACE
- WEDGE AND LEVEL
- SWM ACCESS ROAD
- 1/201 - PROPOSED INLET/SCUPPER
- EX-1/8 - EXISTING INLET

SCALE IN FEET
50 0 50 100

RK&K
81 MOSHER STREET | BALTIMORE, MD 21217
PH: (410) 728-2900 FAX: (410) 728-3160
Engineers Construction Managers Planners Scientists
www.rkk.com

MARYLAND TRANSPORTATION AUTHORITY
Engineering Division

ADDENDUMS & REVISIONS

NO.	DESCRIPTION	BY	DATE

I-95 FROM MORAVIA ROAD TO THE FORT McHENRY TUNNEL - PHASE 1 - SOUTHBOUND

I-95 (BALTIMORE CITY)

ROADWAY PLAN

DESIGNED BY J.M.R. | DRAWN BY R.W.T. | CHECKED BY K.B.K.
CONST. REVIEW BY | DATE DECEMBER 2009 | SCALE AS SHOWN

CONTRACT NO. FT 928-000-006

DRAWING NO. PS-3 of 7

SHEET NO. 14 OF 188

TO FORT McHENRY TUNNEL

TO WHITE MARSH

CURVE NO. 2

P.I. N 596,152.9143
E 1,445,461.6530
△ = 24°-02'-05.52"
Dc = 0°-30'-00.65"
R = 11,455.00'
L = 4,805.23'
T = 2,438.48'
E = 256.67'
S/E = SEE SUPERELEVATION CHART

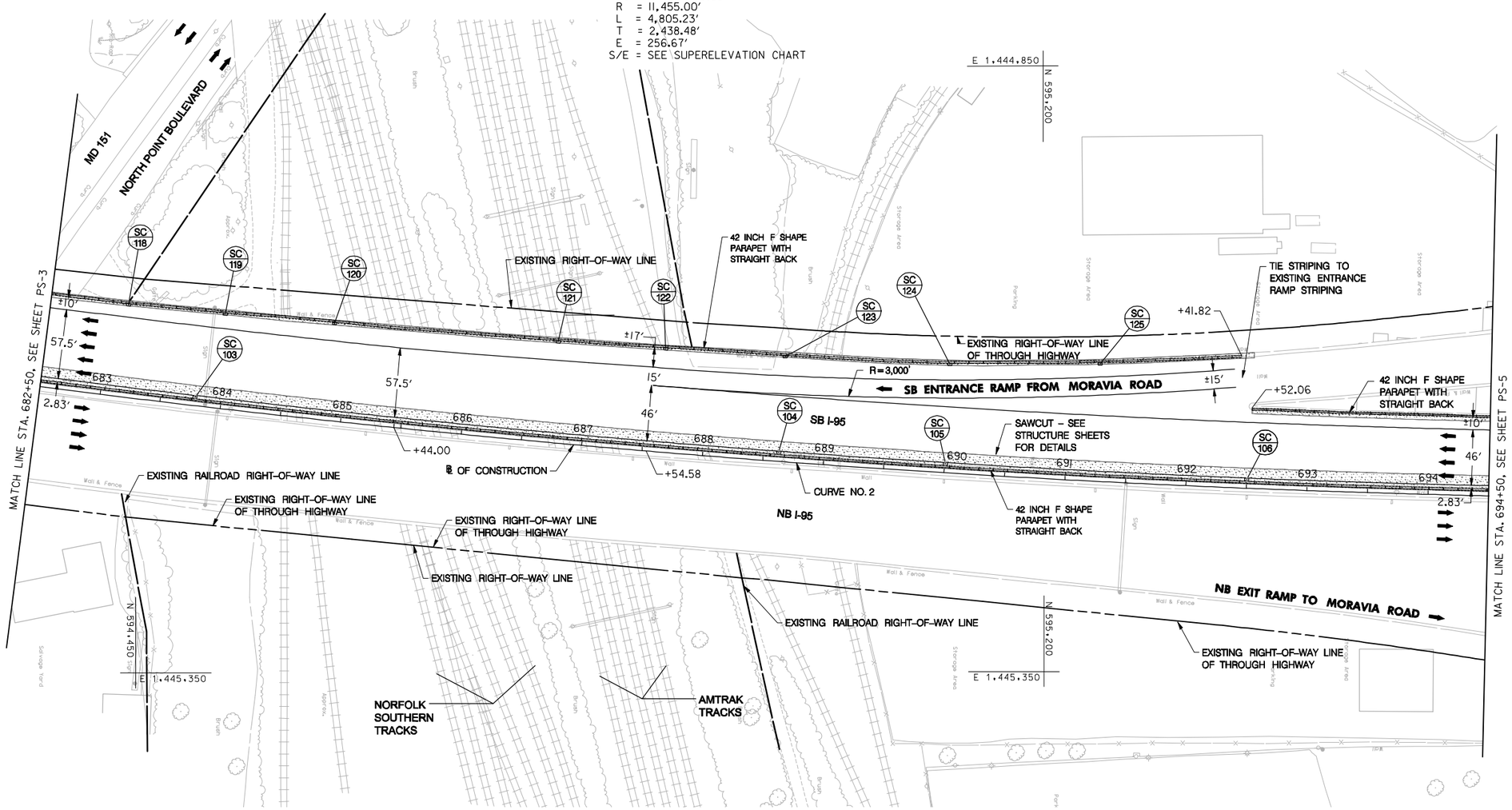

CONCRETE TRAFFIC BARRIER REFLECTIVE DELINEATORS

STA. 682+50 TO STA. 694+50, LT MEDIAN	12 EA
STA. 682+50 TO STA. 694+50, LT OUTSIDE	12 EA

CROSS REFERENCE	DWG. NO.
TYPICAL SECTION	TS-1, TS-2
GEOMETRIC LAYOUT	GS-1
SUPERELEVATION TABLE	SE-02
TRAFFIC CONTROL	MT-5, MT-13, MT-19, MT-23
EROSION AND SEDIMENT CONTROL	ES-4, ES-10, ES-14, ES-18
STRUCTURES	S-2, S-3, S-5 - S-29
SIGNING AND MARKING	SN2.3, SN3.1
ELECTRICAL / UTILITIES / LIGHTING	E-4

STORM DRAIN STRUCTURE SCHEDULE

STRUCTURE	STATION	OFFSET	TYPE	STD. NO.	REMARKS
SC-103	683+78	5.8' LT	MOD TYPE IV BRIDGE SCUPPER	SEE SHEET S-16	NEW
SC-104	688+63	6.5' LT	MOD TYPE IV BRIDGE SCUPPER	SEE SHEET S-16	NEW
SC-105	690+01	6.4' LT	MOD TYPE IV BRIDGE SCUPPER	SEE SHEET S-16	NEW
SC-106	692+50	6.2' LT	MOD TYPE IV BRIDGE SCUPPER	SEE SHEET S-16	NEW
SC-118	683+14	77.2' LT	MOD TYPE IV BRIDGE SCUPPER	SEE SHEET S-16	NEW
SC-119	683+95	79.1' LT	MOD TYPE IV BRIDGE SCUPPER	SEE SHEET S-16	NEW
SC-120	684+86	81.4' LT	MOD TYPE IV BRIDGE SCUPPER	SEE SHEET S-16	NEW
SC-121	686+73	84.5' LT	MOD TYPE IV BRIDGE SCUPPER	SEE SHEET S-16	NEW
SC-122	687+62	86.4' LT	MOD TYPE IV BRIDGE SCUPPER	SEE SHEET S-16	NEW
SC-123	688+62	87.7' LT	MOD TYPE IV BRIDGE SCUPPER	SEE SHEET S-16	NEW
SC-124	689+99	90.6' LT	MOD TYPE IV BRIDGE SCUPPER	SEE SHEET S-16	NEW
SC-125	691+24	100' LT	MOD TYPE IV BRIDGE SCUPPER	SEE SHEET S-16	NEW

STATIONING AND OFFSETS ARE MEASURED TO THE CENTER OF THE INLET/SCUPPER ALONG THE FACE OF THE CONCRETE BARRIER/PARAPET, AND TO THE INVERTS OF THE PIPE

SCALE IN FEET
50 0 50 100

LEGEND

- FULL DEPTH PAVEMENT
- CONCRETE OVERLAY
- GRIND AND RESURFACE
- WEDGE AND LEVEL
- SWM ACCESS ROAD
- I/201 - PROPOSED INLET/SCUPPER
- EX-I/8 - EXISTING INLET

RK&K
81 MOSHER STREET | BALTIMORE, MD 21217
PH: (410) 728-2900 FAX: (410) 728-3160
Engineers Construction Managers Planners Scientists
www.rkk.com

MARYLAND TRANSPORTATION AUTHORITY
Engineering Division

ADDENDUMS & REVISIONS

NO.	DESCRIPTION	BY	DATE

I-95 FROM MORAVIA ROAD TO THE FORT McHENRY TUNNEL - PHASE 1 - SOUTHBOUND

I-95 (BALTIMORE CITY)

ROADWAY PLAN

DESIGNED BY J.M.R. | DRAWN BY R.W.T. | CHECKED BY K.B.K.
CONST. REVIEW BY | DATE DECEMBER 2009 | SCALE AS SHOWN

CONTRACT NO. FT 928-000-006
DRAWING NO. **PS-4 of 7**
SHEET NO. 15 OF 188

TO FORT McHENRY TUNNEL

TO WHITE MARSH

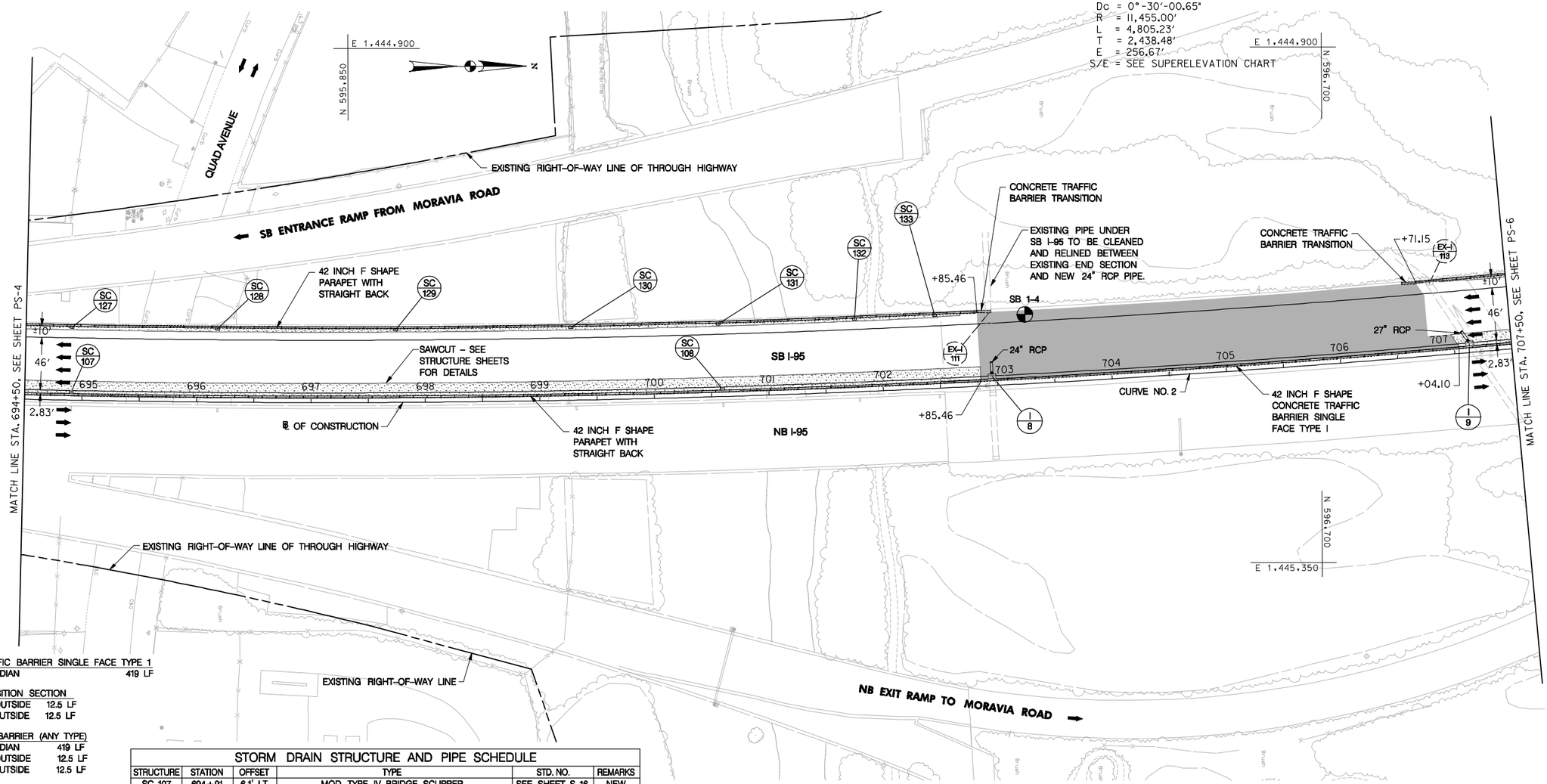

42 INCH F SHAPE CONCRETE TRAFFIC BARRIER SINGLE FACE TYPE 1
STA. 702+85 TO STA. 707+04, LT MEDIAN 419 LF

CONCRETE TRAFFIC BARRIER TRANSITION SECTION
STA. 702+85.5 TO STA. 702+98, LT OUTSIDE 12.5 LF
STA. 706+58.5 TO STA. 706+71, LT OUTSIDE 12.5 LF

REMOVAL OF EXISTING CONCRETE BARRIER (ANY TYPE)
STA. 702+85 TO STA. 707+04, LT MEDIAN 419 LF
STA. 702+85.5 TO STA. 702+98, LT OUTSIDE 12.5 LF
STA. 706+58.5 TO STA. 706+71, LT OUTSIDE 12.5 LF

CONCRETE TRAFFIC BARRIER REFLECTIVE DELINEATORS
STA. 694+50 TO STA. 707+50, LT MEDIAN 13 EA
STA. 694+50 TO STA. 702+97.5, LT OUTSIDE 8 EA
STA. 706+58.5 TO STA. 707+50, LT OUTSIDE 1 EA

CROSS REFERENCE	DWG. NO.
TYPICAL SECTION	TS-2
GEOMETRIC LAYOUT	GS-1
SUPERELVATION TABLE	SE-02, SE-03
TRAFFIC CONTROL	MT-6, MT-14, MT-20, MT-24
PIPE PROFILES	PP-3
EROSION AND SEDIMENT CONTROL	ES-5, ES-11, ES-15, ES-19
STRUCTURES	S-3 - S-29,S-30 - S-42
SIGNING AND MARKING	SN2.4
ELECTRICAL / UTILITIES / LIGHTING	E-5
BORING LOGS	SO-1

STORM DRAIN STRUCTURE AND PIPE SCHEDULE

STRUCTURE	STATION	OFFSET	TYPE	STD. NO.	REMARKS
SC-107	694+91	6.1' LT	MOD TYPE IV BRIDGE SCUPPER	SEE SHEET S-16	NEW
SC-108	700+60	5.8' LT	MOD TYPE IV BRIDGE SCUPPER	SEE SHEET S-16	NEW
SC-127	694+90	64.7' LT	MOD TYPE IV BRIDGE SCUPPER	SEE SHEET S-16	NEW
SC-128	696+18	64.9' LT	MOD TYPE IV BRIDGE SCUPPER	SEE SHEET S-16	NEW
SC-129	697+74	64.6' LT	MOD TYPE IV BRIDGE SCUPPER	SEE SHEET S-16	NEW
SC-130	699+28	64.6' LT	MOD TYPE IV BRIDGE SCUPPER	SEE SHEET S-16	NEW
SC-131	700+57	64.4' LT	MOD TYPE IV BRIDGE SCUPPER	SEE SHEET S-16	NEW
SC-132	701+77	64.6' LT	MOD TYPE IV BRIDGE SCUPPER	SEE SHEET S-16	NEW
SC-133	702+48	64.7' LT	MOD TYPE IV BRIDGE SCUPPER	SEE SHEET S-16	NEW
I-8	702+95	6' LT	MOD. TYPE "S-1" COMB. DOUBLE GRATE INLET	SEE PP-3	NEW
I-9	707+13	5.7' LT	MOD. TYPE "S-1" COMB. DOUBLE GRATE INLET	SEE PP-3	NEW

PIPE	FROM	TO	LENGTH (LF)	INV. IN	INV. OUT
24" RCP	702+95	702+95	8	I-8 – 44.70	TIE TO EX. PIPE
27" RCP	707+07	707+13	8	I-9 – 48.20	TIE TO EX. PIPE

STATIONING AND OFFSETS ARE MEASURED TO THE CENTER OF THE INLET/SCUPPER ALONG THE FACE OF THE CONCRETE BARRIER/PARAPET, AND TO THE INVERTS OF THE PIPE

PIPE LENGTH IS BASED ON ASSUMED FIELD CONDITIONS. SEE PP-1 TO PP-3 FOR ADDITIONAL DETAILS ON PIPE REMOVAL AND REPLACEMENT. CONTRACTOR SHALL PIPE REPLACEMENT BASED ON NOTES AND PLANS SHOWN ON PP-1 TO PP-3

SCALE IN FEET
50 0 50 100

LEGEND
- FULL DEPTH PAVEMENT
- CONCRETE OVERLAY
- GRIND AND RESURFACE
- WEDGE AND LEVEL
- SWM ACCESS ROAD
- I/201 – PROPOSED INLET/SCUPPER
- EX-I/8 – EXISTING INLET

RK&K
81 MOSHER STREET | BALTIMORE, MD 21217
PH: (410) 728-2900 FAX: (410) 728-3160
Engineers Construction Managers Planners Scientists
www.rkk.com

MARYLAND TRANSPORTATION AUTHORITY
Engineering Division

ADDENDUMS & REVISIONS

NO.	DESCRIPTION	BY	DATE

I-95 FROM MORAVIA ROAD TO THE FORT McHENRY TUNNEL - PHASE 1 - SOUTHBOUND

I-95 (BALTIMORE CITY)

ROADWAY PLAN

DESIGNED BY J.M.R. | DRAWN BY R.W.T. | CHECKED BY K.B.K.
CONST. REVIEW BY | DATE DECEMBER 2009 | SCALE AS SHOWN

CONTRACT NO. FT 928-000-006
DRAWING NO. **PS-5 of 7**
SHEET NO. 16 OF 188

TO FORT McHENRY TUNNEL

TO WHITE MARSH

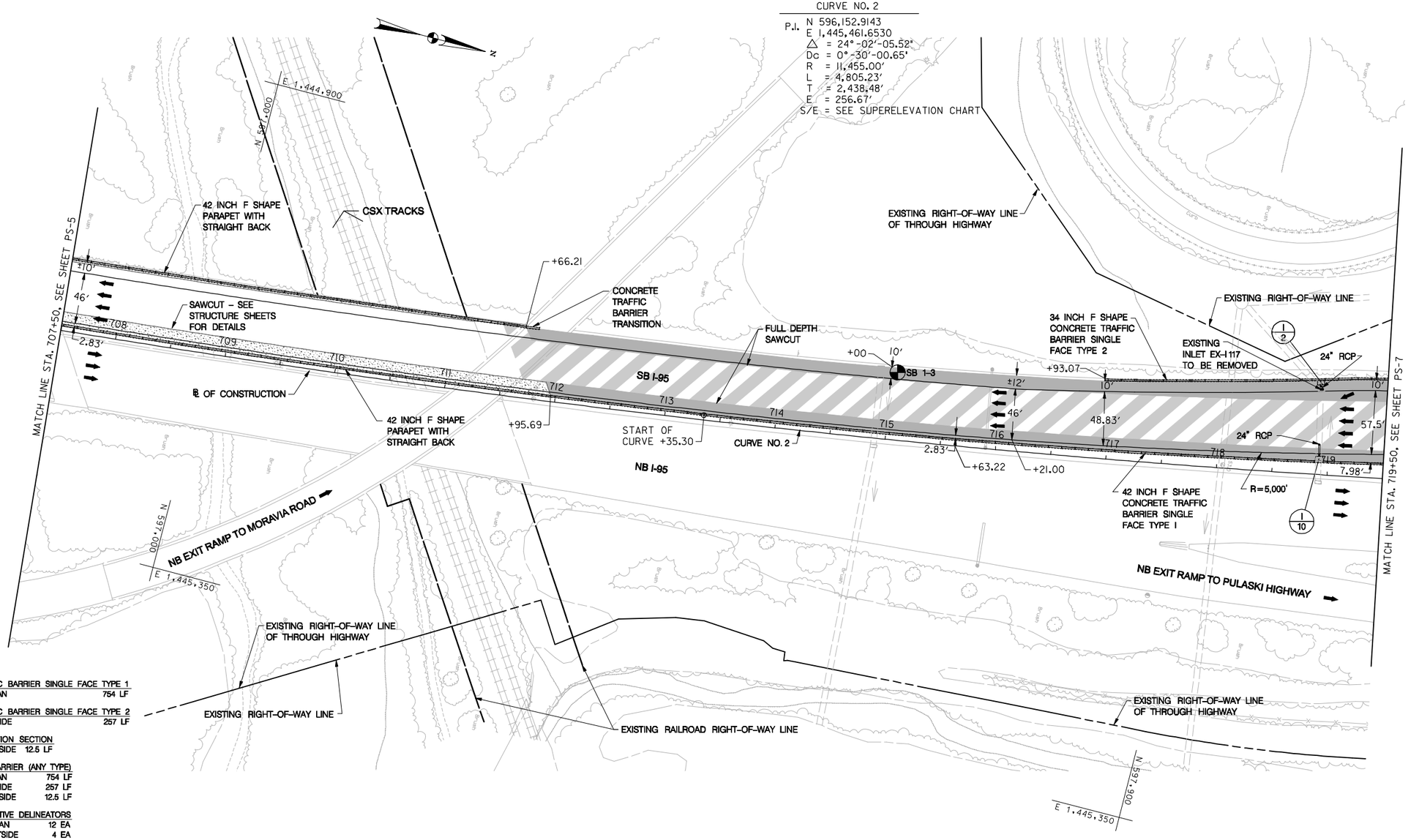

REMOVAL OF EXISTING MASONRY
STA. 718+90, LT LS

42 INCH F SHAPE CONCRETE TRAFFIC BARRIER SINGLE FACE TYPE 1
STA. 711+96 TO STA. 719+50, LT MEDIAN 754 LF

34 INCH F SHAPE CONCRETE TRAFFIC BARRIER SINGLE FACE TYPE 2
STA. 716+93 TO STA. 719+50, LT OUTSIDE 257 LF

CONCRETE TRAFFIC BARRIER TRANSITION SECTION
STA. 711+66 TO STA. 711+78.5, LT OUTSIDE 12.5 LF

REMOVAL OF EXISTING CONCRETE BARRIER (ANY TYPE)
STA. 711+96 TO STA. 719+50, LT MEDIAN 754 LF
STA. 716+93 TO STA. 719+50, LT OUTSIDE 257 LF
STA. 711+66 TO STA. 711+78.5, LT OUTSIDE 12.5 LF

CONCRETE TRAFFIC BARRIER REFLECTIVE DELINEATORS
STA. 707+50 TO STA. 719+50, LT MEDIAN 12 EA
STA. 707+50 TO STA. 711+78.5, LT OUTSIDE 4 EA
STA. 716+93 TO STA. 719+50, LT OUTSIDE 3 EA

NOTES:

1. SEE NOTE 3 ON TS-3 AND GENERAL NOTE 17 ON SHEET GN-01 FOR FULL DEPTH SHOULDER REPLACEMENT.

CROSS REFERENCE	DWG. NO.
TYPICAL SECTION	TS-2, TS-3
GEOMETRIC LAYOUT	GS-1
SUPERELVATION TABLE	SE-03
TRAFFIC CONTROL	MT-7, MT-15, MT-21, MT-25
PIPE PROFILES	PP-1
EROSION AND SEDIMENT CONTROL	ES-6, ES-12, ES-16, ES-20
STRUCTURES	S-30 - S-42
SIGNING AND MARKING	SN2.5, SN3.1, SN8
ELECTRICAL / UTILITIES / LIGHTING	E-6
BORING LOGS	SO-1

STORM DRAIN STRUCTURE AND PIPE SCHEDULE

STRUCTURE	STATION	OFFSET	TYPE	STD. NO.	REMARKS
I-10	718+92	12.3' LT	TYPE "S-1" COMB. DOUBLE GRATE INLET	SEE PP-3	NEW
I-2	718+89	85.2' LT	TYPE "S-1" COMB. DOUBLE GRATE INLET	SEE PP-3	NEW

PIPE	FROM	TO	LENGTH (LF)	INV. IN	INV. OUT
24" RCP	718+92	718+92	8	I-10 - 43.41	TIE TO EX. PIPE
24" RCP	718+89	718+89	8	TIE TO EX. PIPE	I-2 - 42.98

STATIONING AND OFFSETS ARE MEASURED TO THE CENTER OF THE INLET/SCUPPER ALONG THE FACE OF THE CONCRETE BARRIER/PARAPET, AND TO THE INVERTS OF THE PIPE

PIPE LENGTH IS BASED ON ASSUMED FIELD CONDITIONS. SEE PP-1 TO PP-3 FOR ADDITIONAL DETAILS ON PIPE REMOVAL AND REPLACEMENT. CONTRACTOR SHALL PIPE REPLACEMENT BASED ON NOTES AND PLANS SHOWN ON PP-1 TO PP-3

SCALE IN FEET
50 0 50 100

LEGEND

- FULL DEPTH PAVEMENT
- CONCRETE OVERLAY
- GRIND AND RESURFACE
- WEDGE AND LEVEL
- SWM ACCESS ROAD
- 1/201 - PROPOSED INLET/SCUPPER
- EX-I/8 - EXISTING INLET

RK&K
81 MOSHER STREET | BALTIMORE, MD 21217
PH: (410) 728-2900 FAX: (410) 728-5160
Engineers Construction Managers Planners Scientists
www.rkk.com

MARYLAND TRANSPORTATION AUTHORITY
Engineering Division

ADDENDUMS & REVISIONS

NO.	DESCRIPTION	BY	DATE

I-95 FROM MORAVIA ROAD TO THE FORT McHENRY TUNNEL - PHASE 1 - SOUTHBOUND

I-95 (BALTIMORE CITY)

ROADWAY PLAN

DESIGNED BY J.M.R. | DRAWN BY R.W.T. | CHECKED BY K.B.K.
CONST. REVIEW BY ____ | DATE DECEMBER 2009 | SCALE AS SHOWN

CONTRACT NO. FT 928-000-006
DRAWING NO. PS-6 of 7
SHEET NO. 17 OF 188

TO FORT McHENRY TUNNEL

TO WHITE MARSH

CURVE NO. 2

P.I. N 596,152.9143
E 1,445,461.6530
△ = 24°-02'-05.52"
Dc = 0°-30'-00.65"
R = 11,455.00'
L = 4,805.23'
T = 2,438.48'
E = 256.67'
S/E = SEE SUPERELEVATION CHART

CURVE NO. 3

P.I. N 598,706.4107
E 1,444,848.0284
△ = 0°-56'-18.75"
Dc = 0°-15'-00.00"
R = 22,918.3118'
L = 375.42'
T = 187.71'
E = 0.77'
S/E = SEE SUPERELEVATION CHART

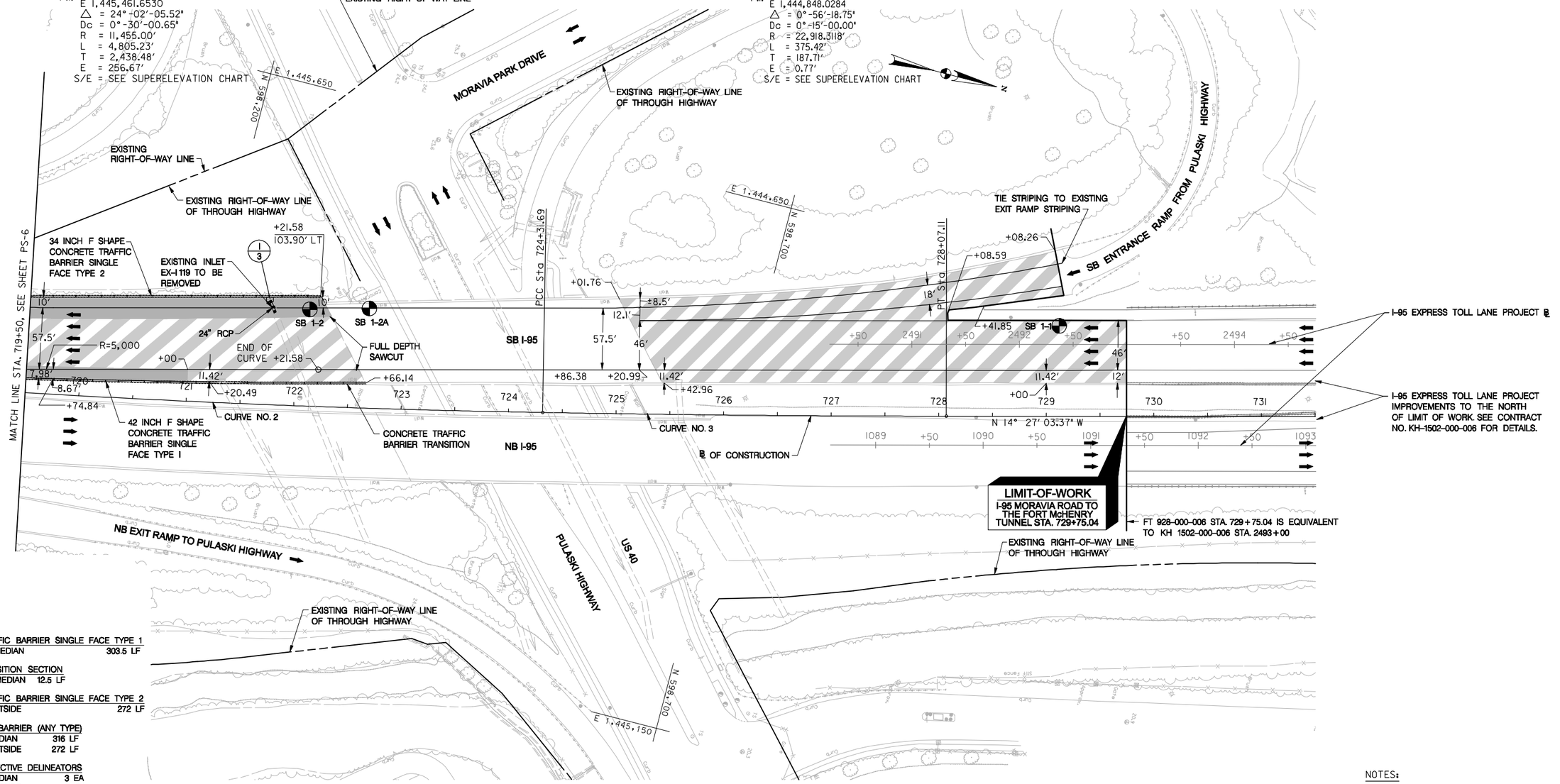

REMOVAL OF EXISTING MASONRY
STA. 721+77, LT LS

42 INCH F SHAPE CONCRETE TRAFFIC BARRIER SINGLE FACE TYPE 1
STA. 719+50 TO STA. 722+53.5, LT MEDIAN 303.5 LF

CONCRETE TRAFFIC BARRIER TRANSITION SECTION
STA. 722+53.5 TO STA. 722+66, LT MEDIAN 12.5 LF

34 INCH F SHAPE CONCRETE TRAFFIC BARRIER SINGLE FACE TYPE 2
STA. 719+50 TO STA. 722+22, LT OUTSIDE 272 LF

REMOVAL OF EXISTING CONCRETE BARRIER (ANY TYPE)
STA. 719+50 TO STA. 722+66, LT MEDIAN 316 LF
STA. 719+50 TO STA. 722+22, LT OUTSIDE 272 LF

CONCRETE TRAFFIC BARRIER REFLECTIVE DELINEATORS
STA. 719+50 TO STA. 722+66, LT MEDIAN 3 EA
STA. 719+50 TO STA. 722+22, LT OUTSIDE 3 EA

NOTES:

1. SEE NOTE 3 ON TS-3 AND GENERAL NOTE 17 ON SHEET GN-01 FOR FULL DEPTH SHOULDER REPLACEMENT.

CROSS REFERENCE	DWG. NO.
TYPICAL SECTION	TS-3, TS-4
GEOMETRIC LAYOUT	GS-1
SUPERELVATION TABLE	SE-03
TRAFFIC CONTROL	MT-8, MT-9, MT-16, MT-22, MT-26
PIPE PROFILES	PP-1
EROSION AND SEDIMENT CONTROL	ES-7, ES-13, ES-17, ES-21
SIGNING AND MARKING	SN2.6
ELECTRICAL / UTILITIES / LIGHTING	E-7
BORING LOGS	SO-1, SO-2

STORM DRAIN STRUCTURE AND PIPE SCHEDULE

STRUCTURE	STATION	OFFSET	TYPE	STD. NO.	REMARKS
I-3	721+74	100' LT	TYPE "S-1" COMB. DOUBLE GRATE INLET	SEE PP-3	NEW

PIPE	FROM	TO	LENGTH (LF)	INV. IN	INV. OUT
24" RCP	721+74	721+79	8	TIE TO EX. PIPE	I-3 - 40.82

STATIONING AND OFFSETS ARE MEASURED TO THE CENTER OF THE INLET/SCUPPER ALONG THE FACE OF THE CONCRETE BARRIER/PARAPET, AND TO THE INVERTS OF THE PIPE

PIPE LENGTH IS BASED ON ASSUMED FIELD CONDITIONS. SEE PP-1 TO PP-3 FOR ADDITIONAL DETAILS ON PIPE REMOVAL AND REPLACEMENT. CONTRACTOR SHALL PIPE REPLACEMENT BASED ON NOTES AND PLANS SHOWN ON PP-1 TO PP-3

SCALE IN FEET
50 0 50 100

LEGEND

- FULL DEPTH PAVEMENT
- CONCRETE OVERLAY
- GRIND AND RESURFACE
- WEDGE AND LEVEL
- SWM ACCESS ROAD
- (I/201) - PROPOSED INLET/SCUPPER
- (EX-I/8) - EXISTING INLET

RK&K
81 MOSHER STREET | BALTIMORE, MD 21217
PH: (410) 728-2900 FAX: (410) 728-3160
Engineers Construction Managers Planners Scientists
www.rkk.com

MARYLAND TRANSPORTATION AUTHORITY
Engineering Division

ADDENDUMS & REVISIONS			
NO.	DESCRIPTION	BY	DATE

I-95 FROM MORAVIA ROAD TO THE FORT McHENRY TUNNEL - PHASE 1 - SOUTHBOUND

I-95 (BALTIMORE CITY)

ROADWAY PLAN

DESIGNED BY J.M.R.	DRAWN BY R.W.T.	CHECKED BY K.B.K.
CONST. REVIEW BY	DATE DECEMBER 2009	SCALE AS SHOWN

CONTRACT NO. FT 928-000-006

DRAWING NO. PS-7 of 7

SHEET NO. 18 OF 188

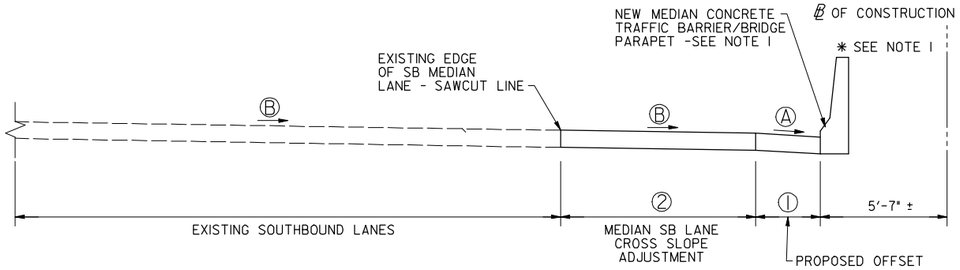

I-95 SOUTHBOUND - CROSS SLOPE ADJUSTMENT (SEE CHART A)

STA. 658+50.00 TO STA. 729+75.04

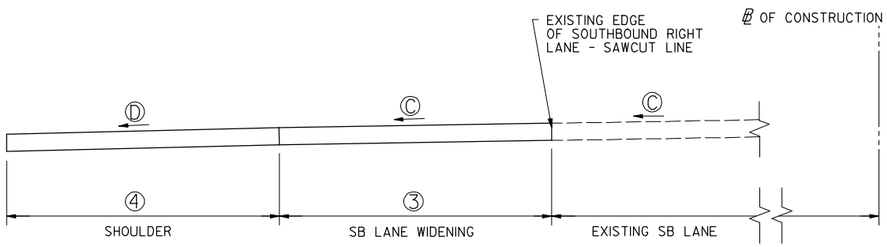

I-95 SOUTHBOUND - OUTSIDE WIDENING (SEE CHART A)

STA. 716+75.00 TO STA. 722+25.28

CHART A

SHOULDER WIDENING		LANE WIDENING		LANE CROSS SLOPE ADJUSTMENT		MEDIAN OFFSET		℄ CONSTRUCTION STATION
Ⓓ X-SLOPE	④ WIDTH	Ⓒ SEE NOTE 3 X-SLOPE	③ WIDTH	Ⓑ SEE NOTE 2 X-SLOPE	② SEE NOTE 4 WIDTH	Ⓐ X-SLOPE	① WIDTH	
N/A	N/A	N/A	N/A	MATCH EXISTING X-SLOPE	MATCH EXISTING WIDTH	MATCH EXISTING X-SLOPE	MATCH EXISTING WIDTH	658+50
								658+75
								659+00
								659+25
								659+50
								659+75
								660+00
				1.98%	0.67'	4.80%	10.75'	660+25
				2.17%	1.09'	5.00%	10.33'	660+50
				2.69%	1.50'	5.20%	9.92'	660+75
				2.22%	1.92'	5.40%	9.50'	661+00
				2.38%	2.34'	5.60%	9.08'	661+25
				2.34%	2.75'	5.80%	8.67'	661+50
				2.12%	3.17'		8.25'	661+75
				1.88%	3.59'		7.83'	662+00
				1.94%	4.00'		7.42'	662+25
				2.16%	4.42'		7.00'	662+50
				2.32%	4.84'		6.58'	662+75
				2.46%	5.25'		6.17'	663+00
				2.44%	5.67'		5.75'	663+25
				2.46%	6.09'		5.33'	663+50
				2.70%	6.50'		4.92'	663+75
				2.56%	6.92'		4.50'	664+00
				2.61%	7.34'		4.08'	664+25
				2.61%	7.75'	6.00%	3.67'	664+50
				2.40%	8.17'		3.25'	664+75
				2.75%				665+00
				2.47%				665+25
				2.54%				665+50
				2.64%				665+75
				2.43%				666+00
				2.33%	8.59'		2.83'	666+25
				2.18%				666+50
				2.08%				666+75
				2.09%				667+00
				1.89%				667+25
				1.87%				667+50
				2.03%				667+75

CHART B

RIGHT LANES CROSS SLOPE ADJUSTMENT WIDTH	CROWN ADJUSTMENT WIDTH	℄ CONSTRUCTION STATION
⑥	⑤	
71.71'	0.00'	659+50
69.27'	0.42'	659+75
67.08'	0.96'	660+00
64.87'	1.50'	660+25
62.50'	2.04'	660+50
60.16'	2.60'	660+75
57.92'	3.17'	661+00
55.68'	3.76'	661+25
53.42'	4.31'	661+50
51.28'	4.83'	661+75
49.15'	5.42'	662+00
47.01'	5.99'	662+25
44.95'	6.56'	662+50
43.91'	6.20'	662+75
42.99'	5.85'	663+00
42.05'	5.52'	663+25
41.21'	5.14'	663+50
40.54'	4.71'	663+75
39.93'	4.33'	664+00
39.33'	3.94'	664+25
38.76'	3.51'	664+50
38.30'	3.04'	664+75
37.88'	2.54'	665+00
37.22'	2.57'	665+25
36.65'	2.54'	665+50
36.18'	2.46'	665+75
35.82'	2.46'	666+00
35.54'	2.48'	666+25
35.12'	2.50'	666+50
34.79'	2.50'	666+75
34.45'	2.48'	667+00
34.05'	2.45'	667+25
33.85'	2.43'	667+50
33.85'	2.42'	667+75
33.85'	2.40'	668+00
33.85'	2.38'	668+25
33.91'	2.39'	668+50
33.97'	2.36'	668+75
33.96'	2.32'	669+00
33.99'	2.26'	669+25
34.24'	2.21'	669+50
34.40'	2.17'	669+75
TO EXISTING BRIDGE ABUTMENT	2.36'	670+00

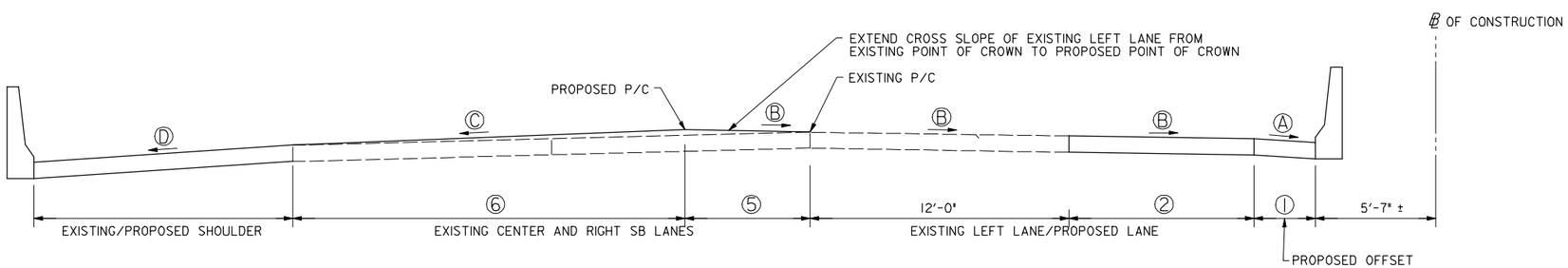

I-95 SOUTHBOUND - CROWN POINT ADJUSTMENT (SEE CHART B)

STA. 659+50.00 TO STA. 670+00

NOTES:

1. OFFSET FROM I-95 ℄ TO MATCH EXISTING MEDIAN CONCRETE TRAFFIC BARRIER/ BRIDGE PARAPET POSITION. CONTRACTOR SHALL FIELD VERIFY EXISTING OFFSET.
2. EXISTING LANE CROSS SLOPE TO BE FIELD VERIFIED BY THE CONTRACTOR. THE FIELD VERIFIED CROSS SLOPE SHALL BE UTILIZED.
3. CROSS SLOPE Ⓒ SHALL BE DETERMINED BY CONTRACTOR BASED ON THE ELEVATION OF THE PROPOSED CROWN AND ELEVATION OF THE EXISTING RIGHT EDGE OF THE RIGHT LANE.
4. WIDTH ② MAY BE MODIFIED BASED ON EXISTING SHOULDER WIDTH. SEE NOTE 3 ON SHEET TS-1 AND GENERAL NOTE 17 ON SHEET GN-01. SEE STRUCTURAL NOTES ON S-1 FOR MODIFICATIONS ON BRIDGE DECKS.

RK&K
81 MOSHER STREET | BALTIMORE, MD 21217
PH: (410) 728-2900 FAX: (410) 728-3160
Engineers Construction Managers Planners Scientists
www.rkk.com

MARYLAND TRANSPORTATION AUTHORITY
Engineering Division

ADDENDUMS & REVISIONS			
NO.	DESCRIPTION	BY	DATE

I-95 FROM MORAVIA ROAD TO THE FORT McHENRY TUNNEL - PHASE 1 - SOUTHBOUND

I-95 (BALTIMORE CITY)

SUPERELEVATION TABLE

CONTRACT NO. FT 928-000-006

DRAWING NO. SE-01

DESIGNED BY J.M.R.	DRAWN BY R.W.T.	CHECKED BY K.B.K.
CONST. REVIEW BY	DATE DECEMBER 2009	SCALE AS SHOWN

SHEET NO. 19 OF 188

CHART A (CONT)

SHOULDER WIDENING		LANE WIDENING		LANE CROSS SLOPE ADJUSTMENT		MEDIAN OFFSET		℄ CONSTRUCTION STATION
Ⓓ X-SLOPE	④ WIDTH	Ⓒ SEE NOTE 3 X-SLOPE	③ WIDTH	Ⓑ SEE NOTE 2 X-SLOPE	② SEE NOTE 4 WIDTH	Ⓐ X-SLOPE	① WIDTH	
N/A	N/A	TO BE DETERMINED BY CONTRACTOR	N/A	1.98%	8.59′	6.00%	2.83′	668+00
				1.87%				668+25
				1.85%				668+50
				1.66%				668+75
				1.72%				669+00
				2.27%				669+25
				2.49%				669+50
				2.09%				669+75
				1.20%				670+00
				1.57%				670+25
				1.80%				670+50
				1.36%				670+75
				1.49%				671+00
				1.61%				671+25
				1.46%				671+50
				1.70%				671+75
				1.60%				672+00
				1.37%				672+25
				1.21%		5.94%		672+50
				0.96%		5.88%		672+75
				0.84%		5.83%		673+00
				0.68%		5.77%		673+25
				0.31%		5.71%		673+50
				0.47%		5.65%		673+75
				0.51%		5.59%		674+00
				0.75%		5.53%		674+25
				-0.18%		5.48%		674+50
				-0.94%		5.42%		674+75
				-1.15%		5.36%		675+00
				-1.07%		5.30%		675+25
				-1.18%				675+50
				-1.34%				675+75
				-1.32%				676+00
				-1.21%				676+25
				-1.21%				676+50
				-0.95%				676+75
				-0.93%				677+00
				-1.29%				677+25
				-1.31%				677+50
				-1.31%				677+75
				-1.30%				678+00
				-1.37%				678+25
				-1.52%				678+50
				-1.39%				678+75
				-1.27%				679+00
				-1.25%				679+25
				-1.04%				679+50
				-1.33%				679+75
				-1.53%				680+00
				-1.32%				680+25
				-1.25%				680+50
				-1.42%				680+75
				-1.41%				681+00
				-1.43%				681+25
				-1.40%				681+50
				-1.26%				681+75

NOTES:

2. EXISTING LANE CROSS SLOPE TO BE FIELD VERIFIED BY THE CONTRACTOR. THE FIELD VERIFIED CROSS SLOPE SHALL BE UTILIZED.
3. CROSS SLOPE Ⓒ SHALL BE DETERMINED BY CONTRACTOR BASED ON THE ELEVATION OF THE PROPOSED CROWN AND ELEVATION OF THE EXISTING RIGHT EDGE OF THE RIGHT LANE.
4. WIDTH ② MAY BE MODIFIED BASED ON EXISTING SHOULDER WIDTH. SEE NOTE 3 ON SHEET TS-1 AND GENERAL NOTE 17 ON SHEET GN-01. SEE STRUCTURAL NOTES ON S-1 FOR MODIFICATIONS ON BRIDGE DECKS.

CHART A (CONT)

SHOULDER WIDENING		LANE WIDENING		LANE CROSS SLOPE ADJUSTMENT		MEDIAN OFFSET		℄ CONSTRUCTION STATION
Ⓓ X-SLOPE	④ WIDTH	Ⓒ SEE NOTE 3 X-SLOPE	③ WIDTH	Ⓑ SEE NOTE 2 X-SLOPE	② SEE NOTE 4 WIDTH	Ⓐ X-SLOPE	① WIDTH	
N/A	N/A	N/A	N/A	-1.39%	8.59′	5.30%	2.83′	682+00
				-1.18%				682+25
				-1.42%				682+50
				-1.24%				682+75
				-1.45%				683+00
				-1.42%				683+25
				-1.30%				683+50
				-1.41%				683+75
				-1.65%				684+00
				-1.14%				684+25
				-1.01%				684+50
				-0.83%				684+75
				-0.46%				685+00
				-0.51%				685+25
				-0.83%				685+50
				-1.06%				685+75
				-1.06%				686+00
				-1.15%				686+25
				-1.28%				686+50
				-1.02%				686+75
				-0.88%				687+00
				-0.92%				687+25
				-0.76%				687+50
				-0.93%				687+75
				-0.97%				688+00
				-0.93%				688+25
				-1.17%				688+50
				-1.45%				688+75
				-1.25%				689+00
				-1.09%				689+25
				-1.02%				689+50
				-1.40%				689+75
				-1.63%				690+00
				-1.39%				690+25
				-1.35%				690+50
				-1.36%				690+75
				-1.46%				691+00
				-1.40%				691+25
				-1.53%				691+50
				-1.54%				691+75
				-1.31%				692+00
				-1.36%				692+25
				-1.44%				692+50
				-1.49%				692+75
				-1.46%				693+00
				-1.55%				693+25
				-1.75%				693+50
				-1.56%				693+75
				-1.59%				694+00
				-1.52%				694+25
				-1.46%				694+50
				-1.48%				694+75
				-1.37%				695+00
				-1.56%				695+25
				-1.51%				695+50
				-1.40%				695+75

RK&K
81 MOSHER STREET | BALTIMORE, MD 21217
PH: (410) 728-2900 FAX: (410) 728-5160
Engineers Construction Managers Planners Scientists
www.rkk.com

MARYLAND TRANSPORTATION AUTHORITY
Engineering Division

ADDENDUMS & REVISIONS

NO.	DESCRIPTION	BY	DATE

I-95 FROM MORAVIA ROAD TO THE FORT McHENRY TUNNEL - PHASE 1 - SOUTHBOUND
I-95 (BALTIMORE CITY)
SUPERELEVATION TABLE

DESIGNED BY J.M.R. | DRAWN BY R.W.T. | CHECKED BY K.B.K.
CONST. REVIEW BY | DATE DECEMBER 2009 | SCALE AS SHOWN

CONTRACT NO. FT 928-000-006
DRAWING NO. SE-02
SHEET NO. 20 OF 188

CHART A (CONT)

SHOULDER WIDENING		LANE WIDENING		LANE CROSS SLOPE ADJUSTMENT		MEDIAN OFFSET		℄ CONSTRUCTION STATION
Ⓓ X-SLOPE	④ WIDTH	Ⓒ SEE NOTE 3 X-SLOPE	③ WIDTH	Ⓑ SEE NOTE 2 X-SLOPE	② SEE NOTE 4 WIDTH	Ⓐ X-SLOPE	Ⓘ WIDTH	
				-1.43%				696+00
				-1.43%				696+25
				-1.47%				696+50
				-1.47%				696+75
				-1.39%				697+00
				-1.47%				697+25
				-1.44%				697+50
				-1.44%				697+75
				-1.44%				698+00
				-1.46%				698+25
				-1.61%				698+50
				-1.70%				698+75
				-1.92%				699+00
				-1.58%				699+25
				-1.76%				699+50
				-1.83%				699+75
				-1.76%				700+00
				-1.51%				700+25
				-1.45%				700+50
				-1.41%				700+75
				-1.38%				701+00
				-1.50%				701+25
				-1.31%				701+50
				-1.21%				701+75
				-1.52%				702+00
				-1.34%				702+25
				-1.58%				702+50
				-1.40%				702+75
N/A	N/A	N/A	N/A	-0.93%	8.59′	5.30%	2.83′	703+00
				-1.71%				703+25
				-1.97%				703+50
				-1.65%				703+75
				-1.69%				704+00
				-1.61%				704+25
				-1.43%				704+50
				-1.66%				704+75
				-1.48%				705+00
				-1.63%				705+25
				-1.80%				705+50
				-1.57%				705+75
				-1.48%				706+00
				-1.40%				706+25
				-1.33%				706+50
				-1.16%				706+75
				-1.32%				707+00
				-1.25%				707+25
				-1.11%				707+50
				-1.53%				707+75
				-1.72%				708+00
				-1.36%				708+25
				-1.24%				708+50
				-1.31%				708+75
				-1.29%				709+00
				-1.21%				709+25
				-1.18%				709+50
				-1.23%				709+75

NOTES:

2. EXISTING LANE CROSS SLOPE TO BE FIELD VERIFIED BY THE CONTRACTOR. THE FIELD VERIFIED CROSS SLOPE SHALL BE UTILIZED.

3. CROSS SLOPE Ⓒ SHALL BE DETERMINED BY CONTRACTOR BASED ON THE ELEVATION OF THE PROPOSED CROWN AND ELEVATION OF THE EXISTING RIGHT EDGE OF THE RIGHT LANE.

4. WIDTH ② MAY BE MODIFIED BASED ON EXISTING SHOULDER WIDTH. SEE NOTE 3 ON SHEET TS-3 AND GENERAL NOTE 17 ON SHEET GN-01. SEE STRUCTURAL NOTES ON S-1 AND S-30 FOR MODIFICATIONS ON BRIDGE DECKS.

CHART A (CONT)

SHOULDER WIDENING		LANE WIDENING		LANE CROSS SLOPE ADJUSTMENT		MEDIAN OFFSET		℄ CONSTRUCTION STATION
Ⓓ X-SLOPE	④ WIDTH	Ⓒ SEE NOTE 3 X-SLOPE	③ WIDTH	Ⓑ SEE NOTE 2 X-SLOPE	② SEE NOTE 4 WIDTH	Ⓐ X-SLOPE	Ⓘ WIDTH	
				-1.20%		5.30%		710+00
				-1.31%				710+25
				-1.37%				710+50
				-1.22%				710+75
				-1.24%				711+00
				-1.65%				711+25
				-1.35%				711+50
				-1.17%				711+75
				-1.06%				712+00
				-1.10%				712+25
				-1.12%	8.59′			712+50
				-0.85%			2.83′	712+75
N/A	N/A	N/A	N/A	-0.72%				713+00
				-0.89%				713+25
				-1.17%				713+50
				-1.06%				713+75
				-0.95%				714+00
				-1.04%				714+25
				-1.30%		5.30%		714+50
				-1.15%				714+75
				-1.14%				715+00
				-1.03%				715+25
				-1.04%				715+50
				-0.98%	8.58′		2.84′	715+75
				-0.96%	8.54′		2.88′	716+00
				-0.94%	8.45′		2.97′	716+25
				-0.82%	8.33′		3.09′	716+50
			0.88′	-0.85%	8.16′		3.26′	716+75
-6.00%	10.00′		1.59′	-0.83%	7.94′		3.48′	717+00
-6.00%	10.00′		2.30′	-0.92%	7.68′		3.74′	717+25
-6.00%	10.00′		3.19′	-1.01%	7.38′		4.04′	717+50
-6.00%	10.00′		3.81′	-1.22%	7.04′		4.38′	717+75
-6.00%	10.00′		4.75′	-1.28%	6.65′		4.77′	718+00
-6.00%	10.00′		5.82′	-0.93%	6.22′		5.20′	718+25
-6.00%	10.00′		6.84′	-0.95%	5.75′		5.67′	718+50
-6.00%	10.00′		7.76′	-1.12%	5.23′		6.19′	718+75
-6.00%	10.00′		8.77′	-1.02%	4.67′	5.00%	6.75′	719+00
-6.00%	10.00′		9.52′	-0.86%	4.07′	4.70%	7.35′	719+25
-6.00%	10.00′	MATCH EXISTING X-SLOPE	9.80′	-0.76%	3.43′	4.40%	7.99′	719+50
-6.00%	10.00′		10.12′	-0.91%	2.74′	4.10%	8.68′	719+75
-6.00%	10.00′		10.26′	-1.06%	2.07′	3.80%	9.35′	720+00
-6.00%	10.00′		10.30′	-1.10%	1.49′	3.50%	9.93′	720+25
-6.00%	10.00′		10.15′	-1.02%	0.98′	3.20%	10.44′	720+50
-6.00%	10.00′		10.17′	-0.93%	0.56′	2.90%	10.86′	720+75
-6.00%	10.00′		10.00′	-0.73%	0.22′	2.60%	11.20′	721+00
-6.00%	10.00′		9.65′	MATCH EXISTING X-SLOPE	MATCH EXISTING WIDTH	MATCH EXISTING X-SLOPE	MATCH EXISTING WIDTH	721+25
-6.00%	10.00′		9.64′					721+50
-6.00%	10.00′		9.25′					721+75
-6.00%	10.00′		8.84′					722+00
N/A	N/A	N/A	N/A	MATCH EXISTING X-SLOPE	MATCH EXISTING WIDTH	MATCH EXISTING X-SLOPE	MATCH EXISTING WIDTH	722+25 to 729+50

RK&K
81 MOSHER STREET | BALTIMORE, MD 21217
PH: (410) 728-2900 FAX: (410) 728-2160
Engineers Construction Managers Planners Scientists
www.rkk.com

MARYLAND TRANSPORTATION AUTHORITY
Engineering Division

ADDENDUMS & REVISIONS

NO.	DESCRIPTION	BY	DATE

I-95 FROM MORAVIA ROAD TO THE FORT McHENRY TUNNEL - PHASE 1 - SOUTHBOUND

I-95 (BALTIMORE CITY)

SUPERELEVATION TABLE

CONTRACT NO. FT 928-000-006

DRAWING NO. **SE-03**

SHEET NO. 21 OF 188

DESIGNED BY J.M.R. | DRAWN BY R.W.T. | CHECKED BY K.B.K.

CONST. REVIEW BY _____ | DATE DECEMBER 2009 | SCALE AS SHOWN

TRAFFIC CONTROL - GENERAL NOTES

1. PRIOR TO BEGINNING ANY CONSTRUCTION WORK, THE CONTRACTOR SHALL MEET ALL THE REQUIREMENTS FOR EROSION AND SEDIMENT CONTROL FOR THE PROJECT.

2. ALL TEMPORARY TRAFFIC CONTROL DEVICES SHALL CONFORM TO THE GENERAL NOTES AS DIRECTED IN MARYLAND STANDARD NUMBERS MD 104.00-01 THROUGH 104.00-18; 104.01-17; 104.01-22 THROUGH 104.01-25; 104.01-32; 104.01-70; 104.01-72; 104.01-73; 104.05-07; AND 104.05-08 AND SHALL BE IN CONFORMANCE WITH THE 2006 MARYLAND MUTCD.

   INSTALLATION OF PROPOSED OVERHEAD AND CANTILEVER SIGNS THAT ARE LOCATED OUTSIDE THE LIMITS OF THE TRAFFIC CONTROL PLANS SHALL USE THE MDSHA TEMPORARY TRAFFIC CONTROL TYPICAL APPLICATION STANDARDS.

   THE CONTRACTOR SHALL COMPLY WITH MDSHA TEMPORARY TRAFFIC CONTROL TYPICAL APPLICATION STANDARDS 104.06-11 THROUGH 104.06-15 FOR PAVEMENT DROP OFF.

3. ALL CONSTRUCTION ON THIS PROJECT SHALL CONFORM TO THE CONTRACT SPECIAL PROVISIONS AND APPLICABLE MDSHA AND AUTHORITY SPECIFICATIONS.

4. EXISTING PAVEMENT MARKINGS NO LONGER APPLICABLE SHALL BE REMOVED AS NOTED ON THE PLANS AND AS DIRECTED BY THE ENGINEER. TEMPORARY MARKINGS SHALL BE USED AS SHOWN ON THE PLANS.

5. ALL WARNING AND REGULATORY SIGNING IN PLACE PRIOR TO CONSTRUCTION SHALL BE MAINTAINED THROUGHOUT THE DURATION OF CONSTRUCTION EXCEPT AS SHOWN ON THE PLANS OR AS DIRECTED BY THE ENGINEER. IF, IN THE OPINION OF THE ENGINEER, ANY SIGNS ARE DAMAGED BY THE CONTRACTOR'S OPERATION, THEY ARE TO BE REPLACED AT THE CONTRACTOR'S EXPENSE.

6. THE CONTRACTOR MAY UTILIZE SUB-STAGES TO COMPLETE THE CONSTRUCTION OF EACH STAGE SHOWN IN THE TRAFFIC CONTROL PLANS. THE CONTRACTOR SHALL ENSURE THAT THE SUB-STAGING FOLLOWS THE MDSHA TEMPORARY TRAFFIC CONTROL TYPICAL APPLICATION STANDARDS, INCLUDING PROTECTING THE APPROACH ENDS OF ALL TEMPORARY CONCRETE BARRIERS. GAPS BETWEEN INDIVIDUAL SUB-STAGE WORK ZONES SHALL MAINTAIN A MINIMUM OF 500 FEET BETWEEN TEMPORARY CONCRETE BARRIERS.

7. THE CONTRACTOR IS PROHIBITED FROM HAVING TRUCKS OR OTHER EQUIPMENT ENTER OR EXIT A WORK ZONE ALONG I-95 WHEN THE ADJACENT TRAVEL LANE IS OPEN TO TRAFFIC. THE CONTRACTOR SHALL UTILIZE LANE(S) THAT ARE CLOSED AS PART OF TEMPORARY LANE CLOSURES FOR ACCESS TO WORK ZONES, INCLUDING ACCELERATING INTO OR DECELERATING OUT OF THE OPEN I-95 LANES. THE CONTRACTOR SHALL PROVIDE TRUCK CROSSING SIGNS (W11-10(I)) ALONG I-95 AND INTERCHANGE RAMPS 500 FEET IN ADVANCE OF ANY WORK ZONE ACCESS LOCATIONS. THE TRUCK CROSSING SIGNS SHALL BE PROVIDED ALONG THE SAME SIDE OF I-95 OR INTERCHANGE RAMPS AS THE CONSTRUCTION ACCESS.

8. THE CONTRACTOR SHALL REMOVE AT THE BEGINNING OF CONSTRUCTION THE LENSES OF ALL RAISED PAVEMENT MARKERS ON I-95 SOUTHBOUND THAT ARE WITHIN THE LIMITS OF THE TRAFFIC CONTROL PLANS BUT OUTSIDE THE LIMITS OF RESURFACING AS SHOWN ON THE PLANS. THESE LENSES SHALL BE RESET AT THE END OF CONSTRUCTION. SEE STAGE 1 SEQUENCE OF CONSTRUCTION NOTE 2 AND STAGE 4 SEQUENCE OF CONSTRUCTION NOTE 6.

   WITHIN THE LIMITS OF RESURFACING THE CONTRACTOR SHALL REMOVE ALL RAISED PAVEMENT MARKER LENSES AND HOUSINGS.

   REFER TO SPECIAL PROVISION SECTION 557 (SNOWPLOWABLE RAISED PAVEMENT MARKERS) FOR ADDITIONAL DETAILS.

9. THE CONTRACTOR SHALL INSTALL TEMPORARY RAISED PAVEMENT MARKERS FOR EACH STAGE OF CONSTRUCTION WITHIN THE LIMITS OF TEMPORARY PAVEMENT MARKINGS. THE TEMPORARY RAISED PAVEMENT MARKERS WILL BE PLACED ACCORDING TO FIGURE 3B-7C, FIGURE 3B-8, FIGURE 3B-9, AND FIGURE 3B-9B IN THE MARYLAND MUTCD. NEW TEMPORARY RAISED PAVEMENT MARKERS SHALL BE FURNISHED IN EACH STAGE. TEMPORARY RAISED PAVEMENT MARKERS SHALL NOT BE REUSED.

10. NO PAINTED TEMPORARY PAVEMENT MARKINGS SHALL BE PLACED ON FINAL PAVEMENT SURFACES.

11. PORTABLE VARIABLE MESSAGE SIGN MESSAGES SHALL BE APPROVED BY THE AUTHORITY TRAFFIC MANAGER.

12. THE CONTRACTOR SHALL ENSURE THAT DEVICES, VEHICLES, EQUIPMENT, AND OTHER MISCELLANEOUS FEATURES WITHIN THE WORK ZONE, BEYOND WHAT IS SHOWN ON THE TRAFFIC CONTROL PLANS, DO NOT INTERFERE WITH APPROPRIATE SIGHT DISTANCES FOR MOTORISTS. REFER TO THE LATEST VERSION OF THE AASHTO 'A POLICY ON GEOMETRIC DESIGN OF HIGHWAYS AND STREETS,' THE MARYLAND MUTCD, AND THE FHWA MUTCD WITH ALL ADDENDUMS OR SUPPLEMENTS.

13. THE CONTRACTOR SHALL COORDINATE ALL TEMPORARY MAINLINE LANE CLOSURES, INCLUDING LANE CLOSURE TRAFFIC CONTROL SET-UP, WITH THE AUTHORITY AS PER THE CONTRACT SPECIAL PROVISIONS.

14. THE CONTRACTOR SHALL COORDINATE PLACEMENT OF TRAFFIC CONTROL DEVICES, INCLUDING INITIAL PLACEMENT OF TRAFFIC CONTROL DEVICES AND SHIFTS FROM ONE STAGE OF TRAFFIC CONTROL TO THE NEXT STAGE, WITH THE CONTRACTOR PROVIDING TRAFFIC CONTROL FOR THE ON-GOING KH-1502-000-006 CONSTRUCTION TO THE NORTH. THE CONTRACTOR MAY ADJUST CONSTRUCTION SEQUENCING, CONSTRUCTION TIMING, AND PLACEMENT OF TRAFFIC CONTROL DEVICES TO COORDINATE WITH THE KH-1502-000-006 CONSTRUCTION UPON APPROVAL OF THE ENGINEER. THE CONTRACTOR SHALL SUBMIT ALL REVISIONS TO THE TRAFFIC CONTROL PLAN TO THE ENGINEER FOR APPROVAL.

15. THE CURRENT SCHEDULE (AS OF THE DATE OF ADVERTISEMENT FOR THIS SET OF PLANS) FOR THE KH-1502-000-006 CONSTRUCTION PROVIDES FOR THE FOLLOWING TRAFFIC CONTROL PHASING:
    - PHASE 3 AND PHASE 4 (KH-1502-000-006 CONTRACT) - JULY 2009 THROUGH MID-SEPTEMBER 2010
    - PHASE 5 (KH-1502-000-006 CONTRACT) - FROM COMPLETION OF PHASE 4 UNTIL MID-NOVEMBER 2011

    THE CONTRACTOR SHALL VERIFY THE SCHEDULE OF THE KH-1502-000-006 CONSTRUCTION AND ATTEMPT TO COMPLETE STAGE 1 CONSTRUCTION FOR THIS CONTRACT (FT-928-000-006) BY THE COMPLETION OF PHASE 4 OF THE KH-1502-000-006 CONSTRUCTION.

16. THE TRAFFIC CONTROL PLANS SHOW THAT THE TRAFFIC CONTROL SET-UP MATCHES THE KH-1502-000-006 CONTRACT TRAFFIC CONTROL PLANS IN THE FOLLOWING MANNER:
    - STAGE 1 (FT-928-000-006 CONTRACT) - MATCHES PHASES 3 AND 4 (KH-1502-000-006 CONTRACT) AT THE NORTHERN LIMIT OF THE TRAFFIC CONTROL PLANS
    - STAGES 2 THROUGH 4 (FT-928-000-006 CONTRACT) - MATCH PHASE 5 (KH-1502-000-006 CONTRACT) AT THE NORTHERN LIMIT OF THE TRAFFIC CONTROL PLANS

    THE CONTRACTOR SHALL COORDINATE AS DIRECTED IN NOTE 13 TO ENSURE THAT THE KH-1502-000-006 CONTRACT TRAFFIC CONTROL PLANS HAVE NOT BEEN MODIFIED. THE CONTRACTOR SHALL MAKE ANY NECESSARY REVISIONS TO THE TRAFFIC CONTROL PLAN FOR THIS CONTRACT (FT-928-000-006) AS DIRECTED IN NOTE 13.

17. THE CONTRACTOR SHALL COORDINATE CONSTRUCTION ACTIVITIES, INCLUDING PLACEMENT OF TRAFFIC CONTROL DEVICES, WITH THE CONTRACTOR PROVIDING TRAFFIC CONTROL FOR THE FT-710-000-002R CONSTRUCTION BETWEEN THE FORT MCHENRY TUNNEL AND THE I-95 ETL PROJECT. CONSTRUCTION FOR THE FT-710-000-002R CONTRACT MAY OR MAY NOT BE OCCURRING DURING AND/OR WITHIN THE VICINITY OF THIS CONTRACT (FT-928-000-006) AFTER NOTICE TO PROCEED HAS BEEN GRANTED. THE CONTRACTOR MAY ADJUST CONSTRUCTION SEQUENCING, CONSTRUCTION TIMING, AND PLACEMENT OF TRAFFIC CONTROL DEVICES TO COORDINATE WITH THE FT-710-000-002R CONSTRUCTION UPON APPROVAL OF THE ENGINEER. THE CONTRACTOR SHALL SUBMIT ALL REVISIONS TO THE TRAFFIC CONTROL PLAN TO THE ENGINEER.

18. THE 'EXIT ONLY' PANELS ON THE NEW C-48 CANTILEVER SIGN AND OH-52 OVERHEAD SIGN SHALL BE COVERED UNTIL THE FINAL PAVEMENT SURFACE AND MARKINGS ARE PROVIDED AT THE COMPLETION OF STAGE 4.

19. THE CONTRACTOR SHALL BE REQUIRED TO MAINTAIN ROADWAY LIGHTING AS DIRECTED IN THE ELECTRICAL PLANS AND SPECIAL PROVISION 'TEMPORARY ELECTRICAL LIGHTING SYSTEM'. ANY DEVIATION FROM THESE PLANS OR SPECIAL PROVISION SHALL BE SUBMITTED TO THE ENGINEER FOR APPROVAL.

20. ROLL-UP SIGNS ARE NOT PERMITTED FOR USE AS TEMPORARY TRAFFIC CONTROL SIGNS.

SEQUENCE OF CONSTRUCTION NOTES STAGE 1:
WHILE MAINTAINING TRAFFIC ON I-95, PERFORM THE FOLLOWING:

1. PLACE ADVANCE WARNING SIGNS, INFORMATION SIGNS, CHANNELIZATION DEVICES, AND PAVEMENT MARKINGS AS SHOWN ON THE PLANS AND TYPICAL SECTIONS TO SHIFT TRAFFIC.
2. CONCURRENT WITH #1, ERADICATE EXISTING PAVEMENT MARKINGS OR COVER WITH BLACK MASK TAPE AS NOTED ON THE PLANS. REMOVE THE LENSES OF ALL RAISED PAVEMENT MARKERS AS PER GENERAL NOTE 8.
3. RECONSTRUCT THE RIGHT SHOULDERS WITH FULL DEPTH PAVEMENT.
4. CONCURRENT WITH #3, REMOVE THE EXISTING OUTSIDE CONCRETE TRAFFIC BARRIER AND CONSTRUCT NEW CONCRETE TRAFFIC BARRIER AS NOTED ON THE PLANS ALONG ALL AT-GRADE SECTIONS.
5. CONCURRENT WITH #3 AND #4, REMOVE BRIDGE DECK AND OUTSIDE PARAPET AND RECONSTRUCT DECK AND PARAPET AS SHOWN ON THE PLANS, INCLUDING THE OUTSIDE COLUMN SUPPORTS FOR SIGN STRUCTURE OH-52.
6. CONCURRENT WITH #3 THROUGH #5, CONSTRUCT DRAINAGE FEATURES AS SHOWN ON THE PLANS.
7. CONCURRENT WITH #3 THROUGH #6, CONSTRUCT THE OUTSIDE FOUNDATIONS AND STRUCTURAL COLUMNS FOR SIGN STRUCTURES C-48 AND OH-45. CONSTRUCT ALL OTHER SIGN FEATURES TO BE MOUNTED ON THE OUTSIDE CONCRETE TRAFFIC BARRIER OR BRIDGE PARAPETS.
8. CONCURRENT WITH #3 THROUGH #7, CONSTRUCT THE BIORETENTION FACILITY AND ASSOCIATED DRAINAGE FEATURES AS SHOWN ON THE PLANS.
9. CONCURRENT WITH #3 THROUGH #8, DEMOLISH THE PEDESTRIAN RAMP AS SHOWN ON THE PLANS.

SEQUENCE OF CONSTRUCTION NOTES STAGE 2:
WHILE MAINTAINING TRAFFIC ON I-95, PERFORM THE FOLLOWING:

1. REMOVE STAGE 1 AND PLACE STAGE 2 ADVANCE WARNING SIGNS, INFORMATION SIGNS, CHANNELIZATION DEVICES, AND PAVEMENT MARKINGS AS NOTED ON THE PLANS AND TYPICAL SECTIONS.
2. RECONSTRUCT THE MEDIAN SHOULDERS WITH FULL DEPTH PAVEMENT.
3. CONCURRENT WITH #2, REMOVE THE EXISTING MEDIAN CONCRETE TRAFFIC BARRIER AND CONSTRUCT NEW CONCRETE TRAFFIC BARRIER AS NOTED ON THE PLANS ALONG ALL AT-GRADE SECTIONS.
4. CONCURRENT WITH #2 AND #3, REMOVE BRIDGE DECK AND MEDIAN PARAPET AND RECONSTRUCT DECK AND PARAPET AS SHOWN ON THE PLANS, INCLUDING THE MEDIAN COLUMN SUPPORTS FOR SIGN STRUCTURE OH-52.
5. CONCURRENT WITH #2 THROUGH #4, ADJUST BRIDGE DECK SURFACE AS SHOWN ON THE PLANS.
6. CONCURRENT WITH #2 THROUGH #5, CONSTRUCT DRAINAGE FEATURES AS SHOWN ON THE PLANS.
7. CONCURRENT WITH #2 THROUGH #6, CONSTRUCT THE MEDIAN FOUNDATIONS AND STRUCTURAL COLUMNS FOR SIGN STRUCTURES C-48 AND OH-45. CONSTRUCT ALL OTHER SIGN FEATURES TO BE MOUNTED ON THE MEDIAN CONCRETE TRAFFIC BARRIER OR BRIDGE PARAPETS.
8. CONSTRUCT THE OVERHEAD PORTIONS OF SIGN STRUCTURES C-48, OH-45, AND OH-52.

SEQUENCE OF CONSTRUCTION NOTES STAGE 3:
WHILE MAINTAINING TRAFFIC ON I-95, PERFORM THE FOLLOWING:

1. REMOVE STAGE 2 AND PLACE STAGE 3 ADVANCE WARNING SIGNS, INFORMATION SIGNS, CHANNELIZATION DEVICES, AND PAVEMENT MARKINGS AS NOTED ON THE PLANS AND TYPICAL SECTIONS.
2. RECONSTRUCT THE MAINLINE PAVEMENT.

SEQUENCE OF CONSTRUCTION NOTES STAGE 4:
WHILE MAINTAINING TRAFFIC ON I-95, PERFORM THE FOLLOWING:

1. REMOVE STAGE 3 AND PLACE STAGE 4 ADVANCE WARNING SIGNS, INFORMATION SIGNS, AND CHANNELIZATION DEVICES AS NOTED ON THE PLANS AND TYPICAL SECTIONS.
2. MAINTAIN THE TEMPORARY PAVEMENT MARKINGS AND DRUMS FOR MOT FROM STAGE 3 EXCEPT BETWEEN STA. 693+50 AND STA. 724+50 WHERE PAVEMENT MARKINGS SHOULD BE PLACED AS SHOWN ON THE PLANS. MAINTAIN TEMPORARY SIGNS FROM STAGE 3 UNLESS OTHERWISE NOTED ON THE PLANS.
3. RECONSTRUCT THE MAINLINE PAVEMENT.
4. UPON COMPLETION OF CONSTRUCTION, GRIND AND RESURFACE THE ENTIRE ROAD WITHIN THE LIMITS OF WORK AS SHOWN ON THE ROADWAY PLANS. NOTE THAT TEMPORARY MARKING PAINT SHALL BE USED TO DELINEATE LANES AND SHOULDERS DURING RESURFACING OPERATIONS.
5. CONCURRENT WITH #4, REMOVE TRAFFIC CONTROL DEVICES AND TEMPORARY PAVEMENT MARKINGS ESTABLISHED AT THE BEGINNING OF STAGE 3 AND/OR STAGE 4.
6. CONCURRENT WITH #4 AND #5, PLACE FINAL PAVEMENT MARKINGS, RAISED PAVEMENT MARKERS, AND RESET ALL RAISED PAVEMENT MARKERS LENSES REMOVED DURING STAGE 1.

RK&K
81 MOSHER STREET | BALTIMORE, MD 21217
PH: (410) 728-2900 FAX: (410) 728-3160
Engineers Construction Managers Planners Scientists
www.rkk.com

MARYLAND TRANSPORTATION AUTHORITY
Engineering Division

ADDENDUMS & REVISIONS			
NO.	DESCRIPTION	BY	DATE

I-95 FROM MORAVIA ROAD TO THE FORT McHENRY TUNNEL - PHASE 1 - SOUTHBOUND

I-95 (BALTIMORE CITY)

TRAFFIC CONTROL GENERAL NOTES AND SEQUENCE OF CONSTRUCTION NOTES

DESIGNED BY A.J.G.	DRAWN BY R.W.T.	CHECKED BY J.M.R.	SHEET NO. 22 OF 188
CONST. REVIEW BY	DATE DECEMBER 2009	SCALE AS SHOWN	

CONTRACT NO. FT 928-000-006

DRAWING NO. **MT-1 of 27**

TO FORT McHENRY TUNNEL

TO WHITE MARSH

BIORETENTION FACILITY (BMP NO. :FT0004

MAINTENANCE ACCESS ROAD

SCE

SB ENTRANCE RAMP FROM EASTERN AVENUE

SB EXIT RAMP TO EASTERN AVENUE

DIVERSION INLET SEE DETAIL SHT.

PLACE TEMPORARY BARRIER AT OUTSIDE EDGE OF SHOULDER

EW 1

EX-MH 15

EX-MH 16

EX-MH 17

I/1

ST Sta 644+95.51

SB I-95

NB I-95

643 644 645 646 647 648 649 650 651 652 653 654 655 656

① SIGNS TO BE PLACED IN THE MEDIAN AND ON THE OUTSIDE OF SB I-95

G20-2 (1) END ROAD WORK 48"x 24"

STA. 643+50

EASTERN AVENUE

NB ENTRANCE RAMP FROM EASTERN AVENUE

QUINTON STREET

MATCH LINE STA. 656+50, SEE SHEET MT-3

LEGEND

- TEMPORARY CONCRETE TRAFFIC BARRIER FOR MAINTENANCE OF TRAFFIC
- CONSTRUCTION FROM PREVIOUS STAGE
- TEMPORARY SAND FILLED CRASH CUSHION BARRELS
- DRUM PLACEMENT
- TRAFFIC CONTROL SIGN
- PVMS — PORTABLE VARIABLE MESSAGE SIGN
- TEMPORARY STRIPING, TYPE AS NOTED ON PLAN
- PAVEMENT WORK – CURRENT STAGE
- PAVEMENT CONSTRUCTED IN PREVIOUS STAGE

SCALE IN FEET

50 0 50 100

STAGE 1

RK&K

81 MOSHER STREET | BALTIMORE, MD 21217

PH: (410) 728-2900 FAX: (410) 728-3160

Engineers Construction Managers Planners Scientists

www.rkk.com

MARYLAND TRANSPORTATION AUTHORITY

Engineering Division

ADDENDUMS & REVISIONS			
NO.	DESCRIPTION	BY	DATE

I-95 FROM MORAVIA ROAD TO THE FORT McHENRY TUNNEL - PHASE 1 - SOUTHBOUND

I-95 (BALTIMORE CITY)

TRAFFIC CONTROL PLAN

DESIGNED BY A.J.G.	DRAWN BY R.W.T.	CHECKED BY J.M.R.	
CONST. REVIEW BY	DATE DECEMBER 2009	SCALE AS SHOWN	

CONTRACT NO. FT 928-000-006

DRAWING NO. **MT-2 of 27**

SHEET NO. 23 OF 188

M:\projects\2005\05041_mdta\Task 13 - Moravia to FMT Design\CADD\Phase I - SB\Plans\PMT-P101_plsb_195.dgn

Thursday, December 03, 2009 AT 12:22 PM

TO FORT McHENRY TUNNEL

TO WHITE MARSH

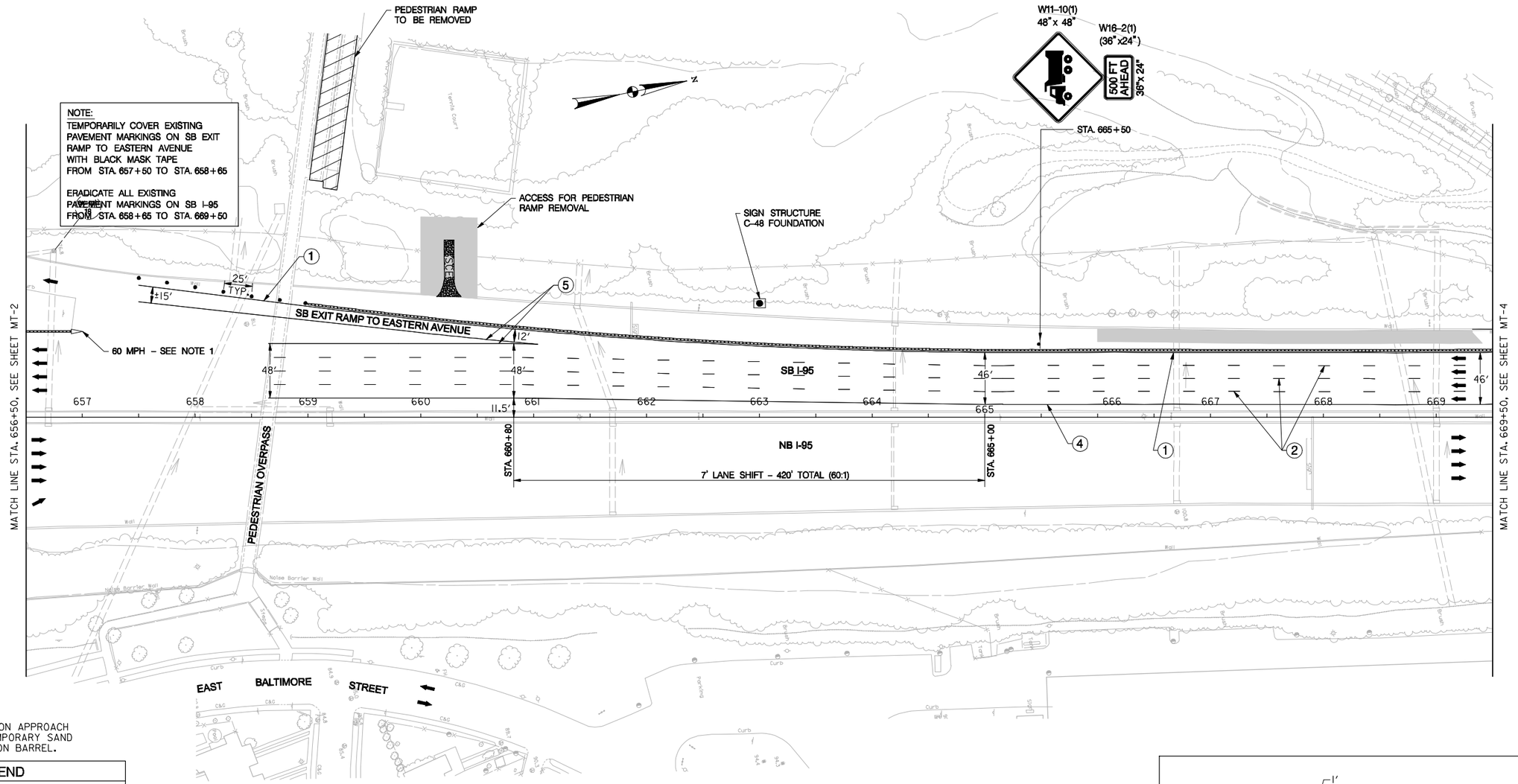

NOTES:

1. PLACE OM-3(3) SIGN ON APPROACH END OF LEADING TEMPORARY SAND FILLED CRASH CUSHION BARREL.

LEGEND

- TEMPORARY CONCRETE TRAFFIC BARRIER FOR MAINTENANCE OF TRAFFIC
- CONSTRUCTION FROM PREVIOUS STAGE
- TEMPORARY SAND FILLED CRASH CUSHION BARRELS
- DRUM PLACEMENT
- TRAFFIC CONTROL SIGN
- PVMS — PORTABLE VARIABLE MESSAGE SIGN
- TEMPORARY STRIPING, TYPE AS NOTED ON PLAN
- PAVEMENT WORK – CURRENT STAGE
- PAVEMENT CONSTRUCTED IN PREVIOUS STAGE

PAVEMENT MARKINGS LEGEND

1. – 5 IN. WHITE REMOVABLE PREFORMED PAVEMENT LINE MARKINGS.
2. – 5 IN. WHITE SKIP REMOVABLE PREFORMED PAVEMENT LINE MARKINGS (10 FT. LINE, 30 FT. GAP).
3. – 5 IN. WHITE SKIP REMOVABLE PREFORMED PAVEMENT LINE MARKINGS (3 FT. LINE, 9 FT. GAP).
4. – 5 IN. YELLOW REMOVABLE PREFORMED PAVEMENT LINE MARKINGS.
5. – 10 IN. WHITE REMOVABLE PREFORMED PAVEMENT LINE MARKINGS.

SCALE IN FEET

50 0 50 100

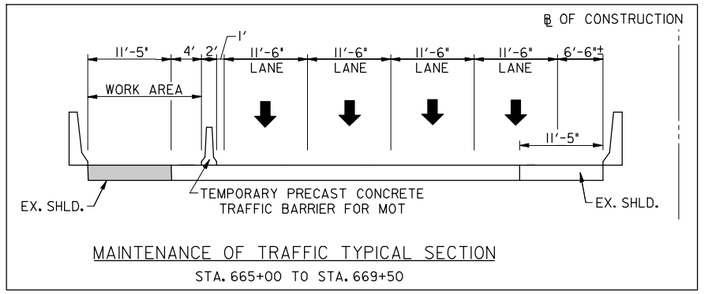

MAINTENANCE OF TRAFFIC TYPICAL SECTION

STA. 665+00 TO STA. 669+50

STAGE 1

RK&K

81 MOSHER STREET | BALTIMORE, MD 21217

PH: (410) 728-2900 FAX: (410) 728-3160

Engineers Construction Managers Planners Scientists

www.rkk.com

MARYLAND TRANSPORTATION AUTHORITY

Engineering Division

ADDENDUMS & REVISIONS			
NO.	DESCRIPTION	BY	DATE

I-95 FROM MORAVIA ROAD TO THE FORT McHENRY TUNNEL - PHASE 1 - SOUTHBOUND

I-95 (BALTIMORE CITY)

TRAFFIC CONTROL PLAN

DESIGNED BY A.J.G.	DRAWN BY R.W.T.	CHECKED BY J.M.R.
CONST. REVIEW BY	DATE DECEMBER 2009	SCALE AS SHOWN

CONTRACT NO. FT 928-000-006

DRAWING NO. **MT-3 OF 27**

SHEET NO. 24 OF 168

TO FORT McHENRY TUNNEL

TO WHITE MARSH

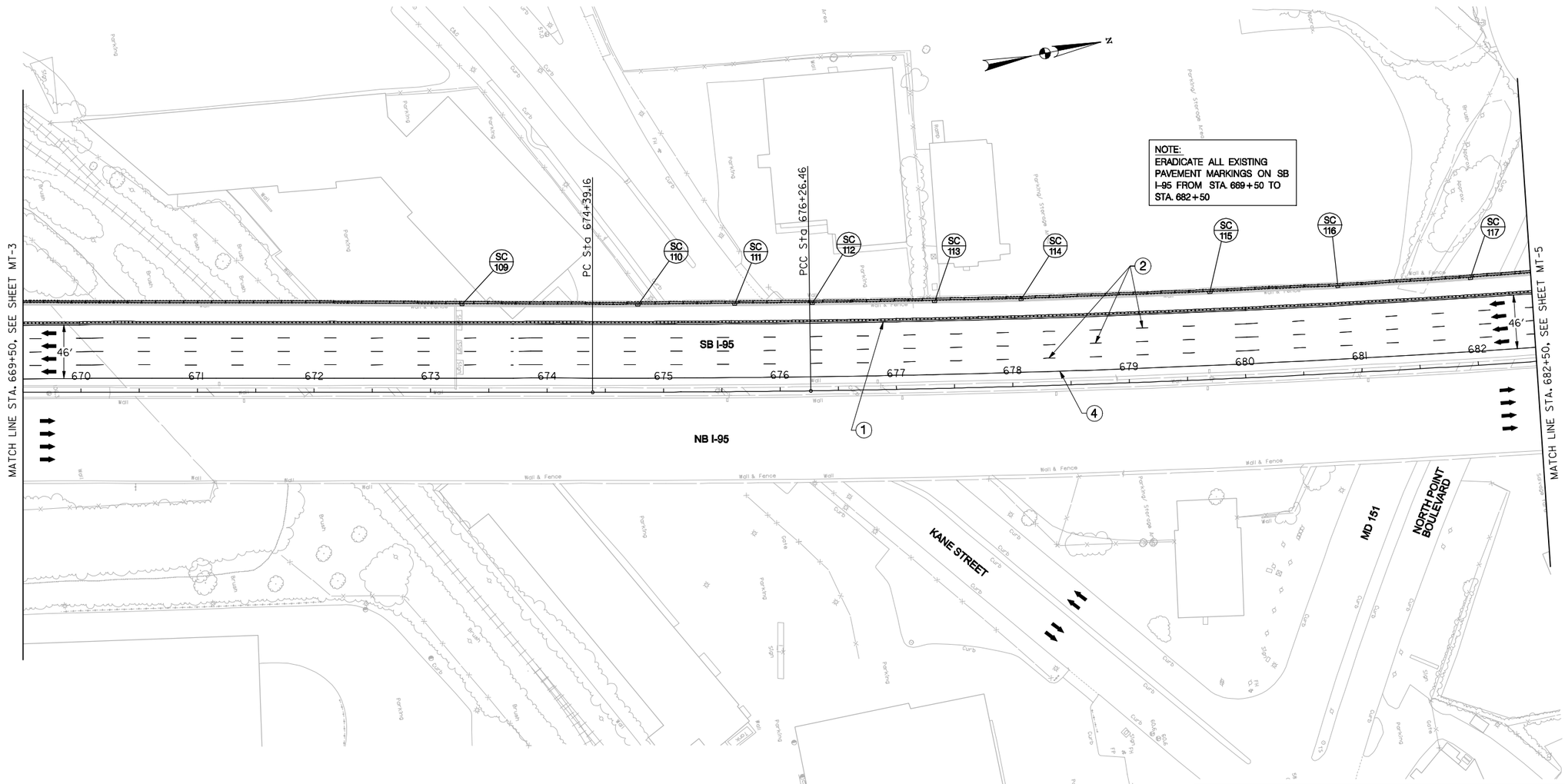

NOTE:
ERADICATE ALL EXISTING PAVEMENT MARKINGS ON SB I-95 FROM STA. 669+50 TO STA. 682+50

LEGEND

- TEMPORARY CONCRETE TRAFFIC BARRIER FOR MAINTENANCE OF TRAFFIC
- CONSTRUCTION FROM PREVIOUS STAGE
- TEMPORARY SAND FILLED CRASH CUSHION BARRELS
- DRUM PLACEMENT
- TRAFFIC CONTROL SIGN
- PVMS — PORTABLE VARIABLE MESSAGE SIGN
- TEMPORARY STRIPING, TYPE AS NOTED ON PLAN
- PAVEMENT WORK – CURRENT STAGE
- PAVEMENT CONSTRUCTED IN PREVIOUS STAGE

PAVEMENT MARKINGS LEGEND

1. – 5 IN. WHITE REMOVABLE PREFORMED PAVEMENT LINE MARKINGS.
2. – 5 IN. WHITE SKIP REMOVABLE PREFORMED PAVEMENT LINE MARKINGS (10 FT. LIN, 30 FT. GAP).
3. – 5 IN. WHITE SKIP REMOVABLE PREFORMED PAVEMENT LINE MARKINGS (3 FT. LIN, 9 FT. GAP).
4. – 5 IN. YELLOW REMOVABLE PREFORMED PAVEMENT LINE MARKINGS.
5. – 10 IN. WHITE REMOVABLE PREFORMED PAVEMENT LINE MARKINGS.

SCALE IN FEET
50 0 50 100

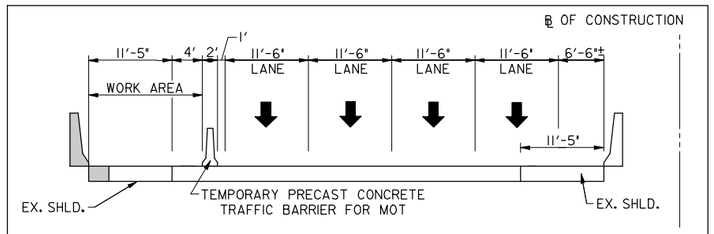

MAINTENANCE OF TRAFFIC TYPICAL SECTION
STA. 669+50 TO STA. 682+50

STAGE 1

RK&K
81 MOSHER STREET | BALTIMORE, MD 21217
PH: (410) 728-2900 FAX: (410) 728-3160
Engineers Construction Managers Planners Scientists
www.rkk.com

MARYLAND TRANSPORTATION AUTHORITY
Engineering Division

ADDENDUMS & REVISIONS			
NO.	DESCRIPTION	BY	DATE

I-95 FROM MORAVIA ROAD TO THE FORT McHENRY TUNNEL - PHASE 1 - SOUTHBOUND

I-95 (BALTIMORE CITY)

TRAFFIC CONTROL PLAN

DESIGNED BY A.J.G.	DRAWN BY R.W.T.	CHECKED BY J.M.R.	
CONST. REVIEW BY	DATE DECEMBER 2009	SCALE AS SHOWN	

CONTRACT NO. FT 928-000-006

DRAWING NO. **MT-4 OF 27**

SHEET NO. 25 OF 188

M:\projects\2005\0504l_mdta\Task 13 - Moravia to FMT Design\CADD\Phase 1 - SB\Plans\PMT-P103_plsb_195.dgn

Thursday, December 03, 2009 AT 12:23 PM

TO FORT McHENRY TUNNEL

TO WHITE MARSH

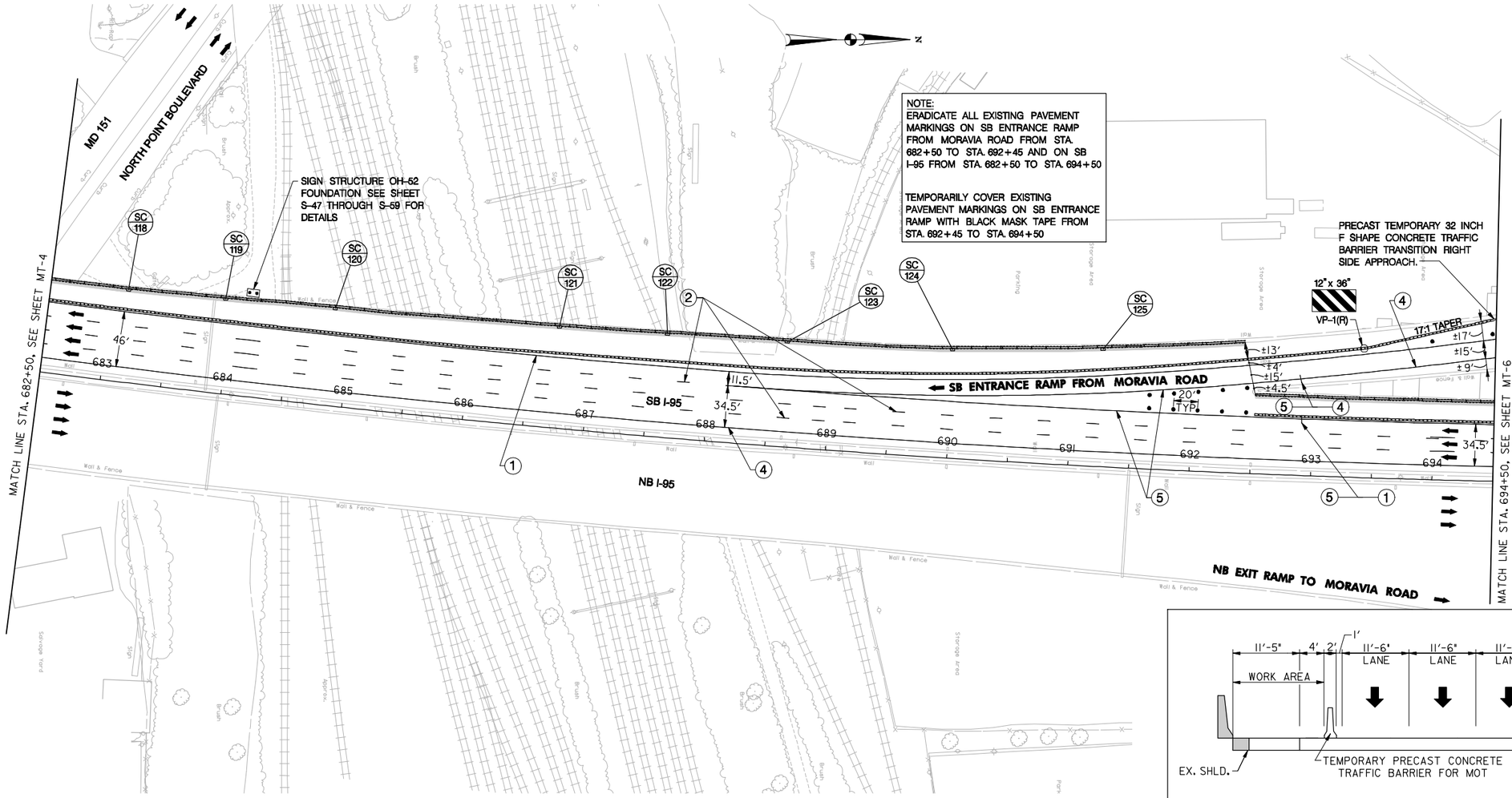

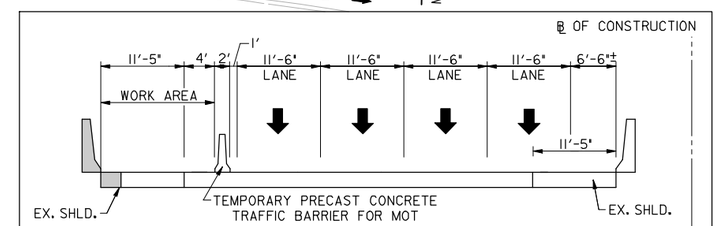

MAINTENANCE OF TRAFFIC TYPICAL SECTION

STA. 682+50 TO STA. 687+00

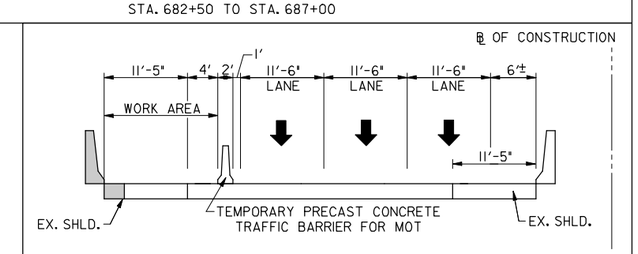

MAINTENANCE OF TRAFFIC TYPICAL SECTION

STA. 687+00 TO STA. 694+50

STAGE 1

LEGEND

- TEMPORARY CONCRETE TRAFFIC BARRIER FOR MAINTENANCE OF TRAFFIC
- CONSTRUCTION FROM PREVIOUS STAGE
- TEMPORARY SAND FILLED CRASH CUSHION BARRELS
- DRUM PLACEMENT
- TRAFFIC CONTROL SIGN
- PVMS — PORTABLE VARIABLE MESSAGE SIGN
- TEMPORARY STRIPING, TYPE AS NOTED ON PLAN
- PAVEMENT WORK – CURRENT STAGE
- PAVEMENT CONSTRUCTED IN PREVIOUS STAGE

PAVEMENT MARKINGS LEGEND

1. – 5 IN. WHITE REMOVABLE PREFORMED PAVEMENT LINE MARKINGS.
2. – 5 IN. WHITE SKIP REMOVABLE PREFORMED PAVEMENT LINE MARKINGS (10 FT. LINE, 30 FT. GAP).
3. – 5 IN. WHITE SKIP REMOVABLE PREFORMED PAVEMENT LINE MARKINGS (3 FT. LINE, 9 FT. GAP).
4. – 5 IN. YELLOW REMOVABLE PREFORMED PAVEMENT LINE MARKINGS.
5. – 10 IN. WHITE REMOVABLE PREFORMED PAVEMENT LINE MARKINGS.

SCALE IN FEET

50 0 50 100

RK&K

81 MOSHER STREET | BALTIMORE, MD 21217

PH: (410) 728-2900 FAX: (410) 728-3160

Engineers Construction Managers Planners Scientists

www.rkk.com

MARYLAND TRANSPORTATION AUTHORITY

Engineering Division

ADDENDUMS & REVISIONS

NO.	DESCRIPTION	BY	DATE

I-95 FROM MORAVIA ROAD TO THE FORT McHENRY TUNNEL - PHASE 1 - SOUTHBOUND

I-95 (BALTIMORE CITY)

TRAFFIC CONTROL PLAN

DESIGNED BY A.J.G.	DRAWN BY R.W.T.	CHECKED BY J.M.R.
CONST. REVIEW BY	DATE DECEMBER 2009	SCALE AS SHOWN

CONTRACT NO. FT 928-000-006

DRAWING NO. **MT-5 OF 27**

SHEET NO. 26 OF 188

TO FORT McHENRY TUNNEL

TO WHITE MARSH

① SIGNS TO BE PLACED ON RIGHT SIDE OF RAMP ONLY.
ALL SIGNS 48"X48".

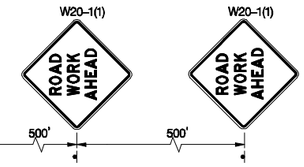

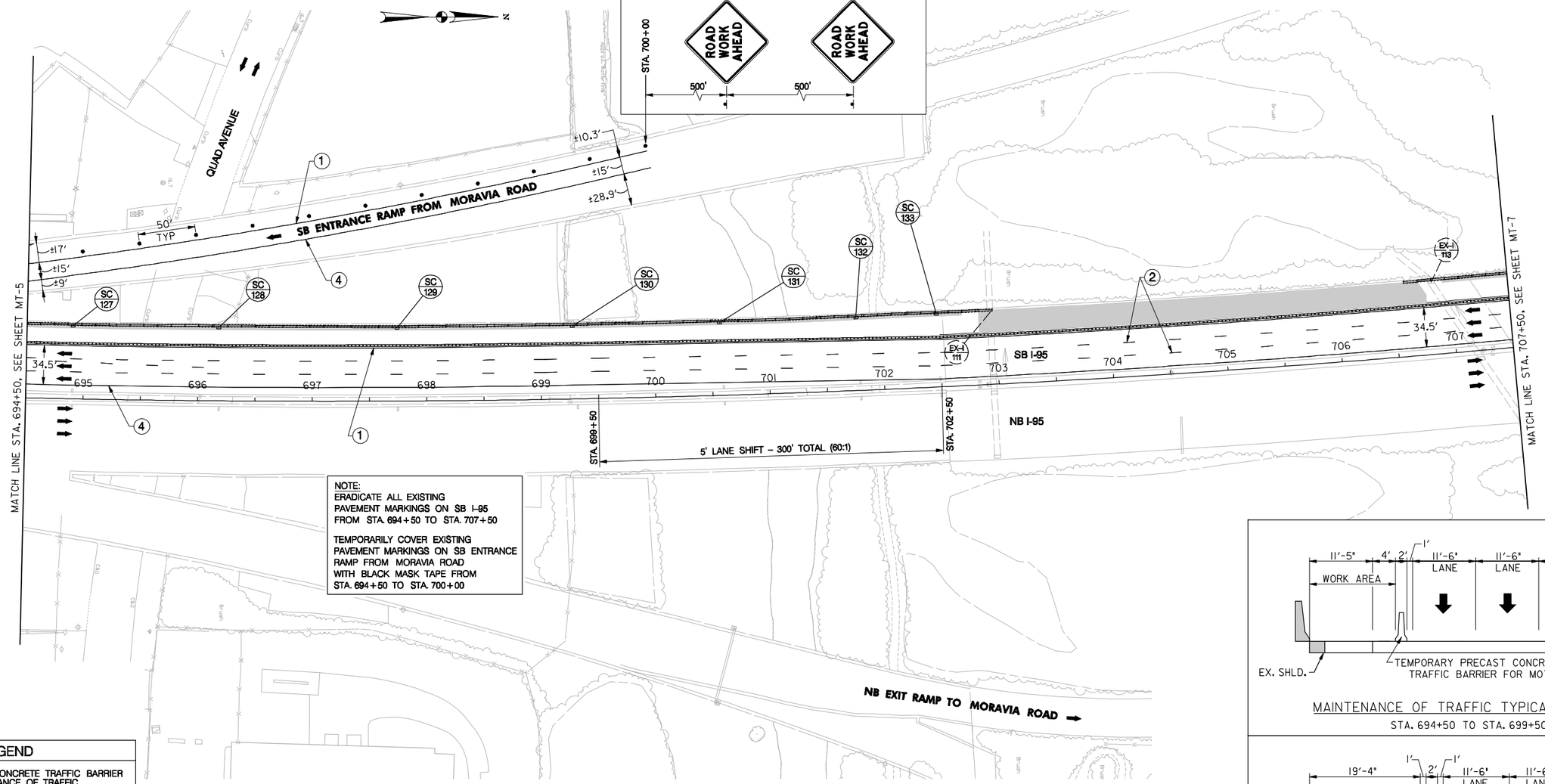

NOTE:
ERADICATE ALL EXISTING PAVEMENT MARKINGS ON SB I-95 FROM STA. 694+50 TO STA. 707+50

TEMPORARILY COVER EXISTING PAVEMENT MARKINGS ON SB ENTRANCE RAMP FROM MORAVIA ROAD WITH BLACK MASK TAPE FROM STA. 694+50 TO STA. 700+00

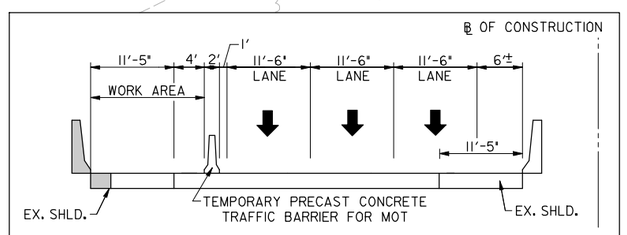

MAINTENANCE OF TRAFFIC TYPICAL SECTION
STA. 694+50 TO STA. 699+50

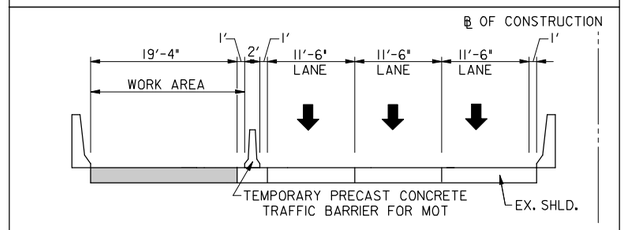

MAINTENANCE OF TRAFFIC TYPICAL SECTION
STA. 702+50 TO STA. 707+50

LEGEND

- TEMPORARY CONCRETE TRAFFIC BARRIER FOR MAINTENANCE OF TRAFFIC
- CONSTRUCTION FROM PREVIOUS STAGE
- TEMPORARY SAND FILLED CRASH CUSHION BARRELS
- DRUM PLACEMENT
- TRAFFIC CONTROL SIGN
- PVMS — PORTABLE VARIABLE MESSAGE SIGN
- TEMPORARY STRIPING, TYPE AS NOTED ON PLAN
- PAVEMENT WORK – CURRENT STAGE
- PAVEMENT CONSTRUCTED IN PREVIOUS STAGE

PAVEMENT MARKINGS LEGEND

1. – 5 IN. WHITE REMOVABLE PREFORMED PAVEMENT LINE MARKINGS.
2. – 5 IN. WHITE SKIP REMOVABLE PREFORMED PAVEMENT LINE MARKINGS (10 FT. LINE, 30 FT. GAP).
3. – 5 IN. WHITE SKIP REMOVABLE PREFORMED PAVEMENT LINE MARKINGS (3 FT. LINE, 9 FT. GAP).
4. – 5 IN. YELLOW REMOVABLE PREFORMED PAVEMENT LINE MARKINGS.
5. – 10 IN. WHITE REMOVABLE PREFORMED PAVEMENT LINE MARKINGS.

SCALE IN FEET
50 0 50 100

STAGE 1

RK&K
81 MOSHER STREET | BALTIMORE, MD 21217
PH: (410) 728-2900 FAX: (410) 728-3160
Engineers Construction Managers Planners Scientists
www.rkk.com

MARYLAND TRANSPORTATION AUTHORITY
Engineering Division

ADDENDUMS & REVISIONS			
NO.	DESCRIPTION	BY	DATE

I-95 FROM MORAVIA ROAD TO THE FORT McHENRY TUNNEL - PHASE 1 - SOUTHBOUND
I-95 (BALTIMORE CITY)
TRAFFIC CONTROL PLAN

DESIGNED BY A.J.G.	DRAWN BY R.W.T.	CHECKED BY J.M.R.	
CONST. REVIEW BY	DATE DECEMBER 2009	SCALE AS SHOWN	

CONTRACT NO. FT 928-000-006
DRAWING NO. **MT-6 OF 27**
SHEET NO. 27 OF 188

TO FORT McHENRY TUNNEL

TO WHITE MARSH

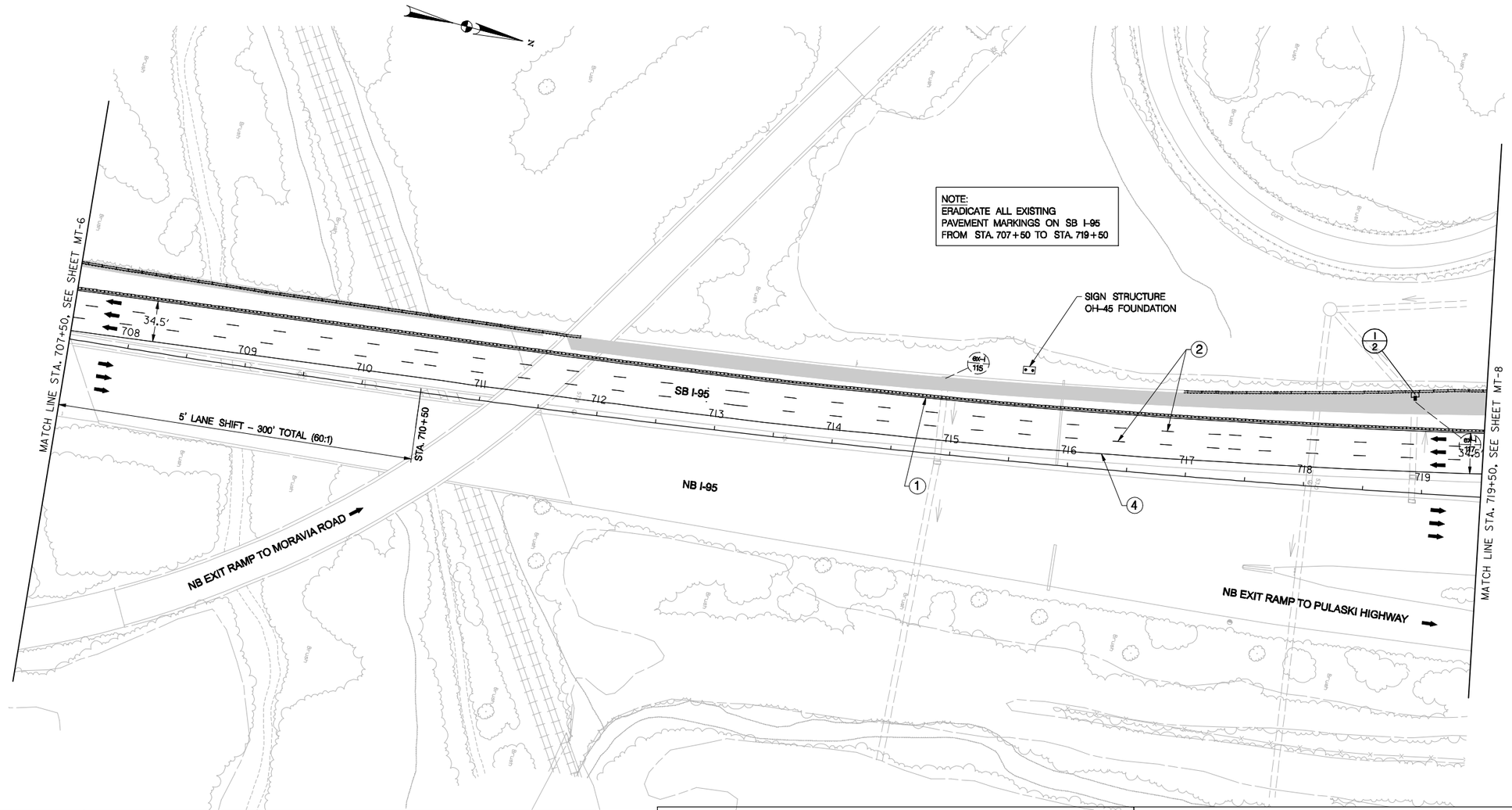

LEGEND

- TEMPORARY CONCRETE TRAFFIC BARRIER FOR MAINTENANCE OF TRAFFIC
- CONSTRUCTION FROM PREVIOUS STAGE
- TEMPORARY SAND FILLED CRASH CUSHION BARRELS
- DRUM PLACEMENT
- TRAFFIC CONTROL SIGN
- PVMS — PORTABLE VARIABLE MESSAGE SIGN
- TEMPORARY STRIPING, TYPE AS NOTED ON PLAN
- PAVEMENT WORK - CURRENT STAGE
- PAVEMENT CONSTRUCTED IN PREVIOUS STAGE

PAVEMENT MARKINGS LEGEND

1. – 5 IN. WHITE REMOVABLE PREFORMED PAVEMENT LINE MARKINGS.
2. – 5 IN. WHITE SKIP REMOVABLE PREFORMED PAVEMENT LINE MARKINGS (10 FT. LINE, 30 FT. GAP).
3. – 5 IN. WHITE SKIP REMOVABLE PREFORMED PAVEMENT LINE MARKINGS (3 FT. LINE, 9 FT. GAP).
4. – 5 IN. YELLOW REMOVABLE PREFORMED PAVEMENT LINE MARKINGS.
5. – 10 IN. WHITE REMOVABLE PREFORMED PAVEMENT LINE MARKINGS.

SCALE IN FEET

50 0 50 100

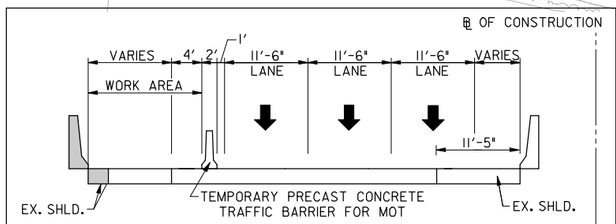

MAINTENANCE OF TRAFFIC TYPICAL SECTION

STA. 707+50 TO STA. 711+25

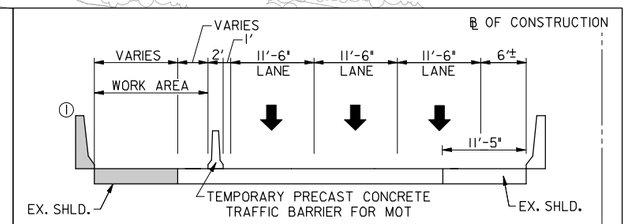

MAINTENANCE OF TRAFFIC TYPICAL SECTION

STA. 711+25 TO STA. 719+50

1 NEW BARRIER INSTALLED FROM STA. 717+00 TO STA. 719+50

STAGE 1

RK&K

81 MOSHER STREET | BALTIMORE, MD 21217

PH: (410) 728-2900 FAX: (410) 728-3160

Engineers Construction Managers Planners Scientists

www.rkk.com

MARYLAND TRANSPORTATION AUTHORITY

Engineering Division

ADDENDUMS & REVISIONS

NO.	DESCRIPTION	BY	DATE

I-95 FROM MORAVIA ROAD TO THE FORT McHENRY TUNNEL - PHASE 1 - SOUTHBOUND

I-95 (BALTIMORE CITY)

TRAFFIC CONTROL PLAN

DESIGNED BY A.J.G.	DRAWN BY R.W.T.	CHECKED BY J.M.R.	
CONST. REVIEW BY	DATE DECEMBER 2009	SCALE AS SHOWN	

CONTRACT NO. FT 928-000-006

DRAWING NO. **MT-7 OF 27**

SHEET NO. 28 OF 188

TO FORT McHENRY TUNNEL

TO WHITE MARSH

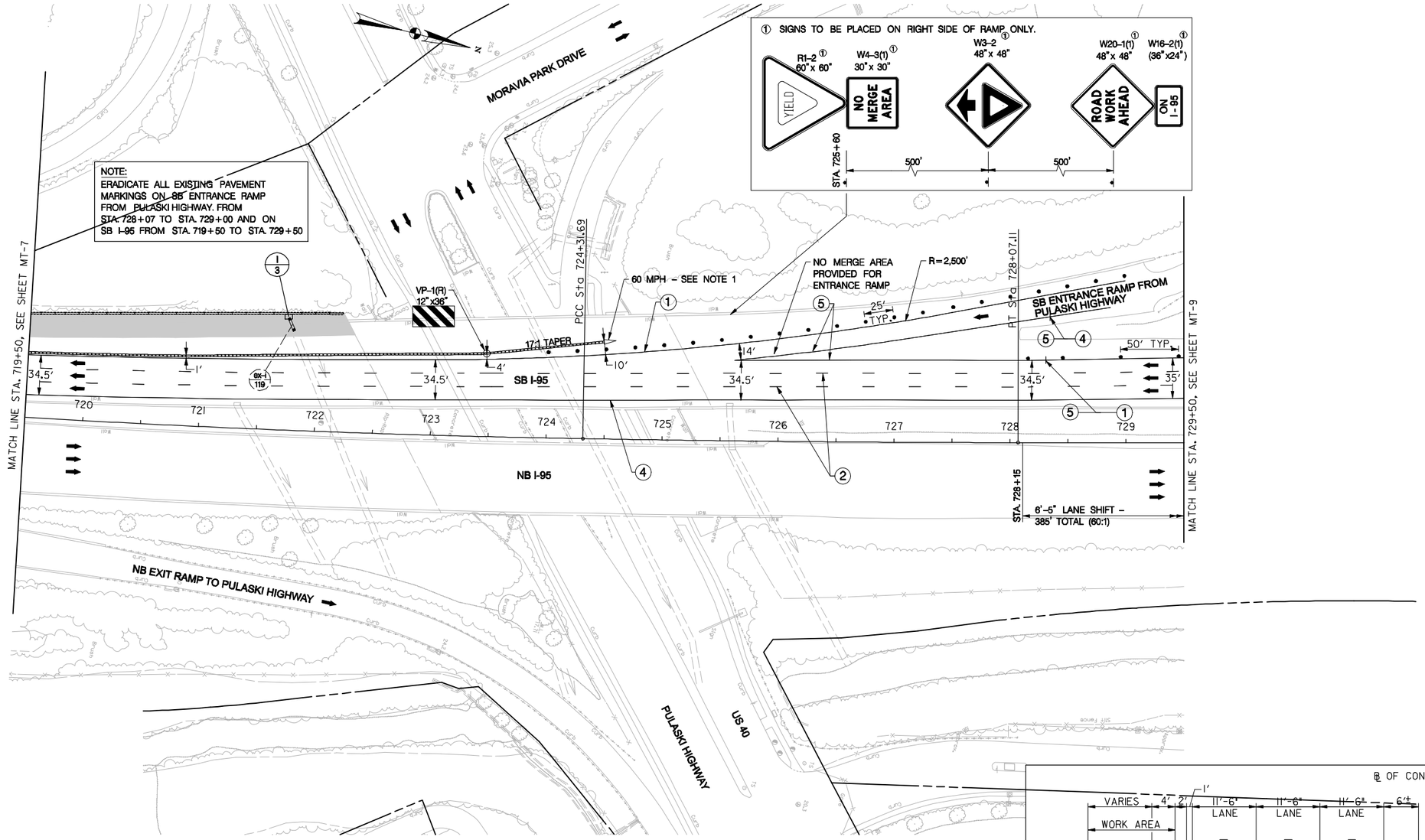

NOTES:

1. PLACE OM-3(3) SIGN ON APPROACH END OF LEADING TEMPORARY SAND FILLED CRASH CUSHION BARREL.
2. THE EXISTING YIELD SIGN LOCATED ALONG THE PULASKI HIGHWAY ENTRANCE RAMP SHALL BE COVERED THROUGHOUT STAGE I CONSTRUCTION.

LEGEND

- TEMPORARY CONCRETE TRAFFIC BARRIER FOR MAINTENANCE OF TRAFFIC
- CONSTRUCTION FROM PREVIOUS STAGE
- TEMPORARY SAND FILLED CRASH CUSHION BARRELS
- DRUM PLACEMENT
- TRAFFIC CONTROL SIGN
- PVMS — PORTABLE VARIABLE MESSAGE SIGN
- TEMPORARY STRIPING, TYPE AS NOTED ON PLAN
- PAVEMENT WORK – CURRENT STAGE
- PAVEMENT CONSTRUCTED IN PREVIOUS STAGE

PAVEMENT MARKINGS LEGEND

1. – 5 IN. WHITE REMOVABLE PREFORMED PAVEMENT LINE MARKINGS.
2. – 5 IN. WHITE SKIP REMOVABLE PREFORMED PAVEMENT LINE MARKINGS (10 FT. LINE, 30 FT. GAP).
3. – 5 IN. WHITE SKIP REMOVABLE PREFORMED PAVEMENT LINE MARKINGS (3 FT. LINE, 9 FT. GAP).
4. – 5 IN. YELLOW REMOVABLE PREFORMED PAVEMENT LINE MARKINGS.
5. – 10 IN. WHITE REMOVABLE PREFORMED PAVEMENT LINE MARKINGS.

SCALE IN FEET

50 0 50 100

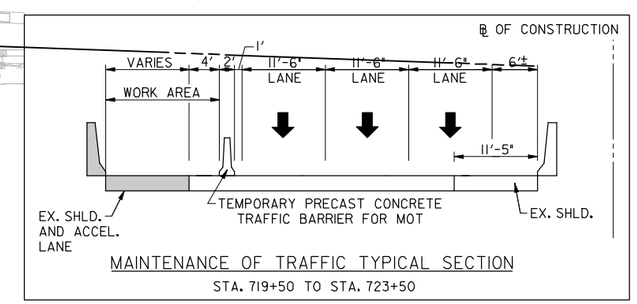

MAINTENANCE OF TRAFFIC TYPICAL SECTION

STA. 719+50 TO STA. 723+50

STAGE 1

RK&K
81 MOSHER STREET | BALTIMORE, MD 21217
PH: (410) 728-2900 FAX: (410) 728-3160
Engineers Construction Managers Planners Scientists
www.rkk.com

MARYLAND TRANSPORTATION AUTHORITY
Engineering Division

ADDENDUMS & REVISIONS			
NO.	DESCRIPTION	BY	DATE

I-95 FROM MORAVIA ROAD TO THE FORT McHENRY TUNNEL - PHASE 1 - SOUTHBOUND

I-95 (BALTIMORE CITY)

TRAFFIC CONTROL PLAN

DESIGNED BY A.J.G.	DRAWN BY R.W.T.	CHECKED BY J.M.R.	
CONST. REVIEW BY	DATE DECEMBER 2009	SCALE AS SHOWN	

CONTRACT NO. FT 928-000-006

DRAWING NO. **MT-8 OF 27**

SHEET NO. 29 OF 188

TO FORT McHENRY TUNNEL

TO WHITE MARSH

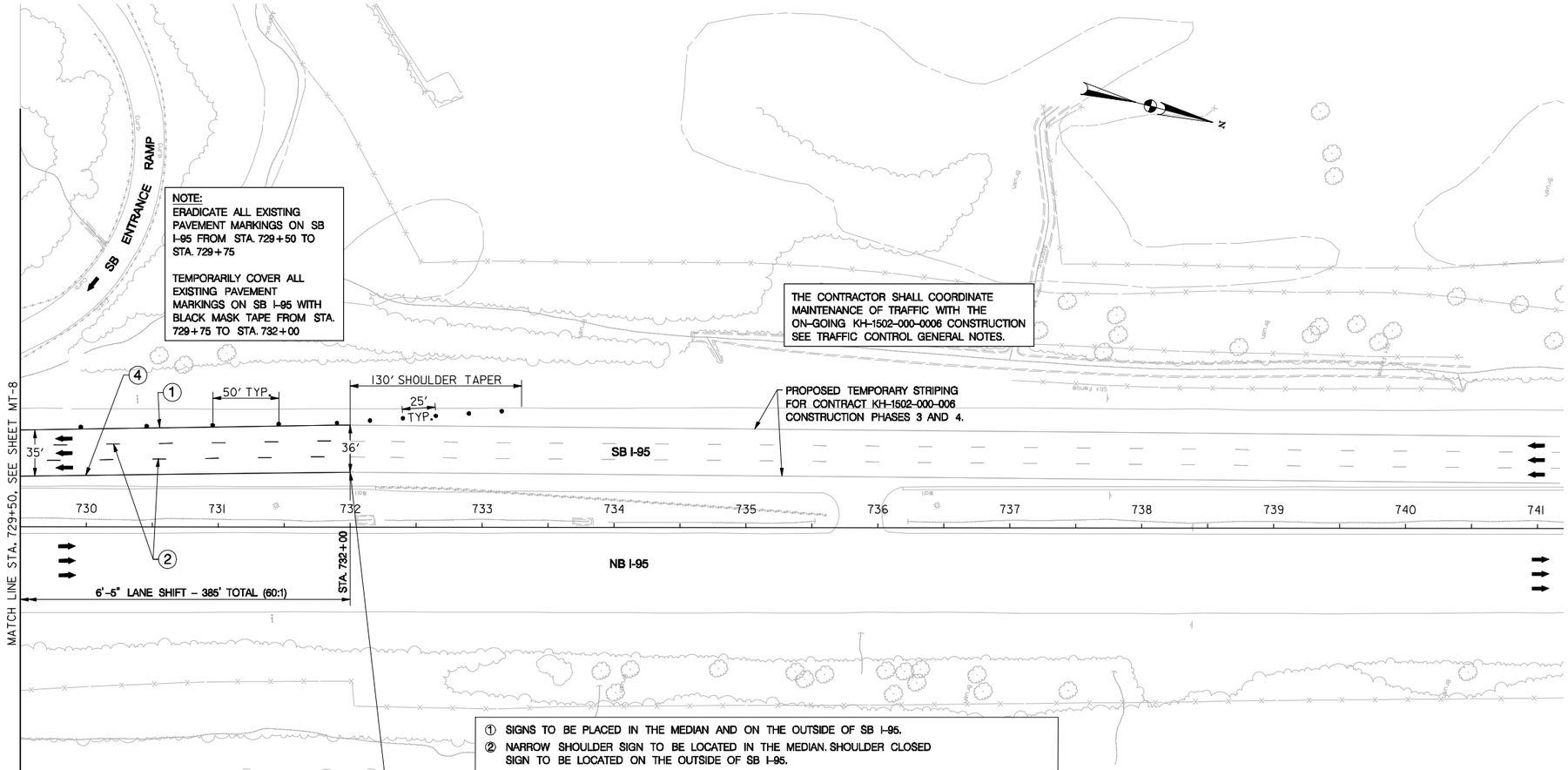

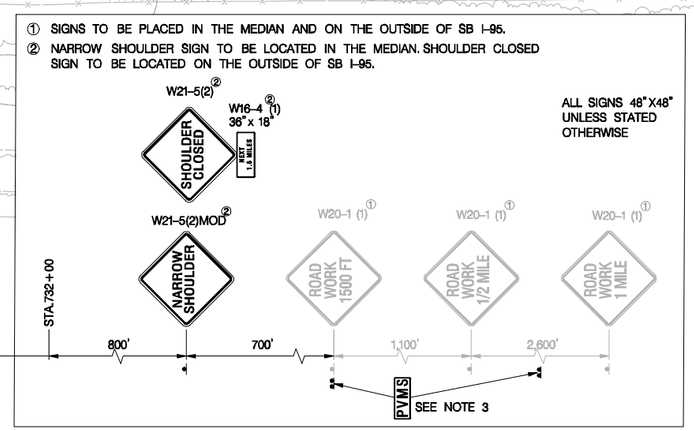

NOTES:

1. ROAD WORK SIGNS (W20-1) TO BE USED ONLY IF I-95 EXPRESS TOLL LANE PROJECT (KH-1502-000-006) HAS COMPLETED CONSTRUCTION AND REMOVED MOT SIGNING.
2. CHANNELIZING DEVICES TO BE TAPERED APPROPRIATELY IF I-95 EXPRESS TOLL LANE PROJECT (KH-1502-000-006) HAS COMPLETED CONSTRUCTION. SEE TRAFFIC CONTROL GENERAL NOTES.
3. PVMS TO BE LOCATED 800 FEET IN ADVANCE OF NARROW SHOULDER (W21-5(1) MOD) AND SHOULDER CLOSED (W21-5(1)) SIGNS IF I-95 EXPRESS TOLL LANE PROJECT (KH-1502-000-006) IS ONGOING OR BETWEEN THE ROAD WORK 1/2 MILE (W20-1) AND ROAD WORK 1 MILE (W20-1) SIGNS IF THE KH-1502-000-006 CONSTRUCTION IS COMPLETED. PVMS TO BE PLACED IN THE MEDIAN AND ON THE OUTSIDE OF SB I-95. SEE DETAIL ON THIS SHEET FOR PVMS MESSAGE DETAILS. SEE TRAFFIC CONTROL GENERAL NOTE 11 FOR PVMS MESSAGE APPROVAL.

PVMS MEASSAGE DETAILS:

PROVIDE THE FOLLOWING MESSAGE FOR ONE WEEK AFTER IMPLEMENTATION OF STAGE 1 TRAFFIC CONTROL SETUP.

SCREEN 1

	R	I	G	H	T		
S	H	O	U	L	D	E	R
	C	L	O	S	E	D	

SCREEN 2

M	E	R	G	I	N	G	
T	R	A	F	F	I	C	
O	N		R	I	G	H	T

LEGEND

- TEMPORARY CONCRETE TRAFFIC BARRIER FOR MAINTENANCE OF TRAFFIC
- CONSTRUCTION FROM PREVIOUS STAGE
- TEMPORARY SAND FILLED CRASH CUSHION BARRELS
- DRUM PLACEMENT
- TRAFFIC CONTROL SIGN
- PVMS — PORTABLE VARIABLE MESSAGE SIGN
- TEMPORARY STRIPING, TYPE AS NOTED ON PLAN
- PAVEMENT WORK - CURRENT STAGE
- PAVEMENT CONSTRUCTED IN PREVIOUS STAGE

SCALE IN FEET

50 0 50 100

PAVEMENT MARKINGS LEGEND

1. – 5 IN. WHITE REMOVABLE PREFORMED PAVEMENT LINE MARKINGS.
2. – 5 IN. WHITE SKIP REMOVABLE PREFORMED PAVEMENT LINE MARKINGS (10 FT. LINE, 30 FT. GAP).
3. – 5 IN. WHITE SKIP REMOVABLE PREFORMED PAVEMENT LINE MARKINGS (3 FT. LINE, 9 FT. GAP).
4. – 5 IN. YELLOW REMOVABLE PREFORMED PAVEMENT LINE MARKINGS.
5. – 10 IN. WHITE REMOVABLE PREFORMED PAVEMENT LINE MARKINGS.

STAGE 1

RK&K
81 MOSHER STREET | BALTIMORE, MD 21217
PH: (410) 728-2900 FAX: (410) 728-3160
Engineers Construction Managers Planners Scientists
www.rkk.com

MARYLAND TRANSPORTATION AUTHORITY
Engineering Division

ADDENDUMS & REVISIONS

NO.	DESCRIPTION	BY	DATE

I-95 FROM MORAVIA ROAD TO THE FORT McHENRY TUNNEL - PHASE 1 - SOUTHBOUND

I-95 (BALTIMORE CITY)

TRAFFIC CONTROL PLAN

DESIGNED BY A.J.G. | DRAWN BY R.W.T. | CHECKED BY J.M.R.

CONST. REVIEW BY | DATE DECEMBER 2009 | SCALE AS SHOWN

CONTRACT NO. FT 928-000-006

DRAWING NO. **MT-9 OF 27**

SHEET NO. 30 OF 188

TO FORT McHENRY TUNNEL

TO WHITE MARSH

NOTE:
TEMPORARILY COVER ALL EXISTING PAVEMENT MARKINGS ON SB I-95 WITH BLACK MASK TAPE FROM STA. 653+45 TO STA. 656+50

SB ENTRANCE RAMP FROM EASTERN AVENUE

MAINTENANCE ACCESS ROAD

SCE

SB EXIT RAMP TO EASTERN AVENUE

DIVERSION INLET SEE DETAIL SHT.

18" RCP

EX. 36"

EX. 24"

EX. 18"

ST Sta 644+95.51

SB I-95

NB I-95

643 644 645 646 647 648 649 650 651 652 653 654 655 656

48'

46.5'

25' TYP.

50' TYP.

STA. 653+45

7' LANE SHIFT - 420' TOTAL (60:1)

MATCH LINE STA. 656+50, SEE SHEET MT-11

G20-2 (1)
END ROAD WORK
48"x 24"

STA. 643+50
SIGNS TO REMAIN FROM STAGE 1

EASTERN AVENUE

NB ENTRANCE RAMP FROM EASTERN AVENUE

QUINTON STREET

LEGEND

- TEMPORARY CONCRETE TRAFFIC BARRIER FOR MAINTENANCE OF TRAFFIC
- CONSTRUCTION FROM PREVIOUS STAGE
- TEMPORARY SAND FILLED CRASH CUSHION BARRELS
- DRUM PLACEMENT
- TRAFFIC CONTROL SIGN
- PVMS — PORTABLE VARIABLE MESSAGE SIGN
- TEMPORARY STRIPING, TYPE AS NOTED ON PLAN
- PAVEMENT WORK - CURRENT STAGE
- PAVEMENT CONSTRUCTED IN PREVIOUS STAGE

PAVEMENT MARKINGS LEGEND

1 – 5 IN. WHITE REMOVABLE PREFORMED PAVEMENT LINE MARKINGS.

2 – 5 IN. WHITE SKIP REMOVABLE PREFORMED PAVEMENT LINE MARKINGS (10 FT. LINE, 30 FT. GAP).

3 – 5 IN. WHITE SKIP REMOVABLE PREFORMED PAVEMENT LINE MARKINGS (3 FT. LINE, 9 FT. GAP).

4 – 5 IN. YELLOW REMOVABLE PREFORMED PAVEMENT LINE MARKINGS.

5 – 10 IN. WHITE REMOVABLE PREFORMED PAVEMENT LINE MARKINGS.

SCALE IN FEET
50 0 50 100

STAGE 2

RK&K
81 MOSHER STREET | BALTIMORE, MD 21217
PH: (410) 728-2900 FAX: (410) 728-3160
Engineers Construction Managers Planners Scientists
www.rkk.com

MARYLAND TRANSPORTATION AUTHORITY
Engineering Division

ADDENDUMS & REVISIONS			
NO.	DESCRIPTION	BY	DATE

I-95 FROM MORAVIA ROAD TO THE FORT McHENRY TUNNEL - PHASE 1 - SOUTHBOUND

I-95 (BALTIMORE CITY)

TRAFFIC CONTROL PLAN

DESIGNED BY A.J.G.	DRAWN BY R.W.T.	CHECKED BY J.M.R.
CONST. REVIEW BY	DATE DECEMBER 2009	SCALE AS SHOWN

CONTRACT NO. FT 928-000-006

DRAWING NO. **MT-10 of 27**

SHEET NO. 31 OF 188

TO FORT McHENRY TUNNEL

TO WHITE MARSH

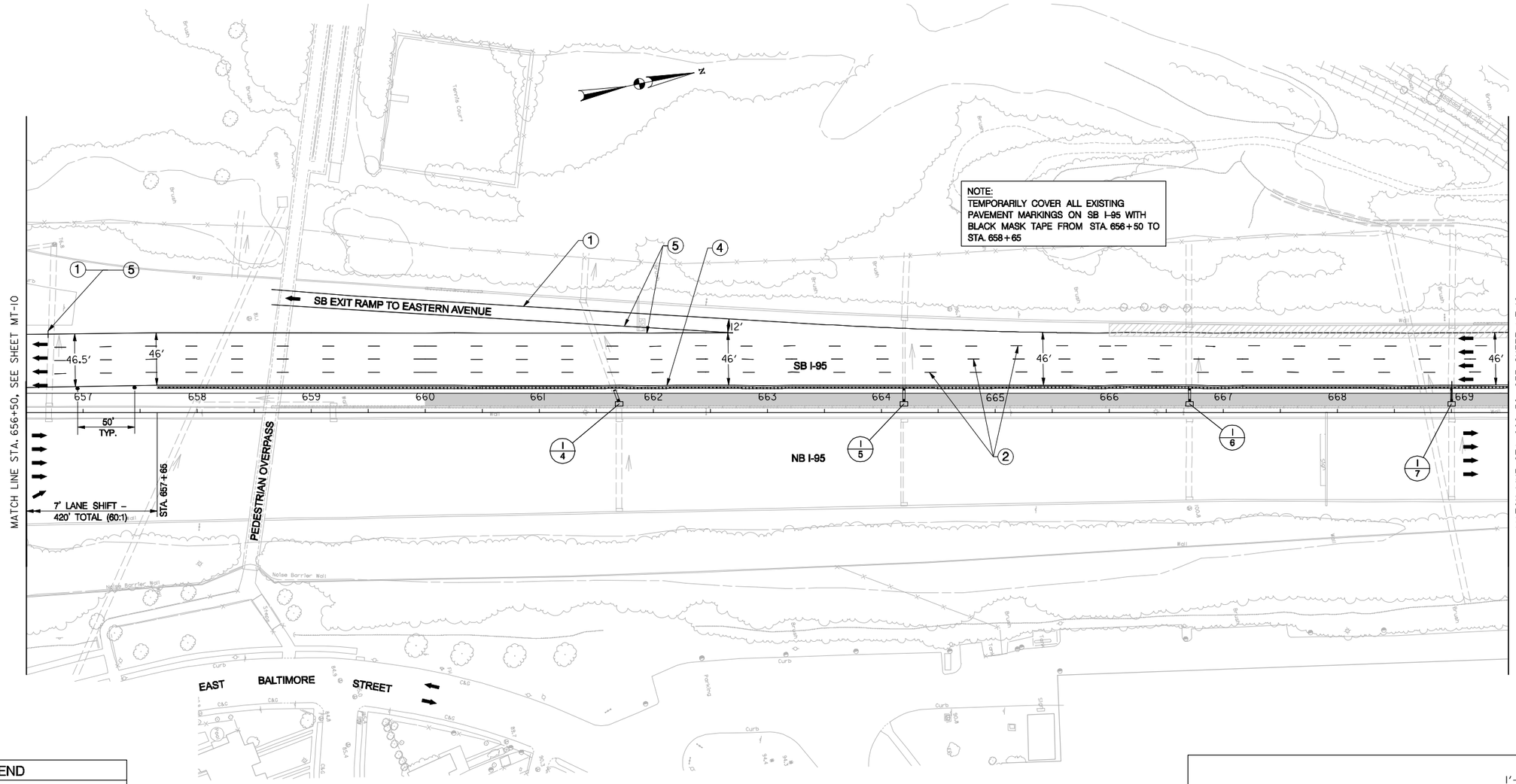

LEGEND

- TEMPORARY CONCRETE TRAFFIC BARRIER FOR MAINTENANCE OF TRAFFIC
- CONSTRUCTION FROM PREVIOUS STAGE
- TEMPORARY SAND FILLED CRASH CUSHION BARRELS
- DRUM PLACEMENT
- TRAFFIC CONTROL SIGN
- PVMS — PORTABLE VARIABLE MESSAGE SIGN
- TEMPORARY STRIPING, TYPE AS NOTED ON PLAN
- PAVEMENT WORK – CURRENT STAGE
- PAVEMENT CONSTRUCTED IN PREVIOUS STAGE

PAVEMENT MARKINGS LEGEND

1. – 5 IN. WHITE REMOVABLE PREFORMED PAVEMENT LINE MARKINGS.
2. – 5 IN. WHITE SKIP REMOVABLE PREFORMED PAVEMENT LINE MARKINGS (10 FT. LINE, 30 FT. GAP).
3. – 5 IN. WHITE SKIP REMOVABLE PREFORMED PAVEMENT LINE MARKINGS (3 FT. LINE, 9 FT. GAP).
4. – 5 IN. YELLOW REMOVABLE PREFORMED PAVEMENT LINE MARKINGS.
5. – 10 IN. WHITE REMOVABLE PREFORMED PAVEMENT LINE MARKINGS.

SCALE IN FEET

50 0 50 100

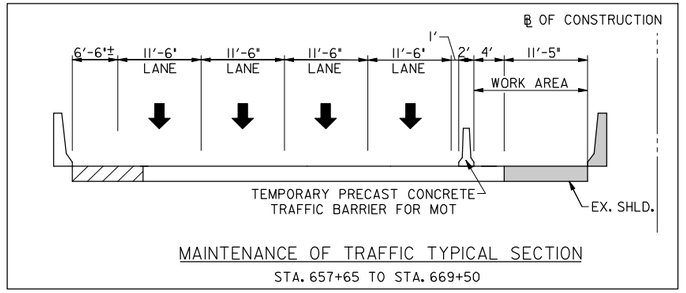

MAINTENANCE OF TRAFFIC TYPICAL SECTION

STA. 657+65 TO STA. 669+50

STAGE 2

RK&K

81 MOSHER STREET | BALTIMORE, MD 21217

PH: (410) 728-2900 FAX: (410) 728-3160

Engineers Construction Managers Planners Scientists

www.rkk.com

MARYLAND TRANSPORTATION AUTHORITY

Engineering Division

ADDENDUMS & REVISIONS			
NO.	DESCRIPTION	BY	DATE

I-95 FROM MORAVIA ROAD TO THE FORT McHENRY TUNNEL - PHASE 1 - SOUTHBOUND

I-95 (BALTIMORE CITY)

TRAFFIC CONTROL PLAN

DESIGNED BY A.J.G.	DRAWN BY R.W.T.	CHECKED BY J.M.R.
CONST. REVIEW BY	DATE DECEMBER 2009	SCALE AS SHOWN

CONTRACT NO. FT 928-000-006

DRAWING NO. **MT-11 OF 27**

SHEET NO. 32 OF 188

TO FORT McHENRY TUNNEL

TO WHITE MARSH

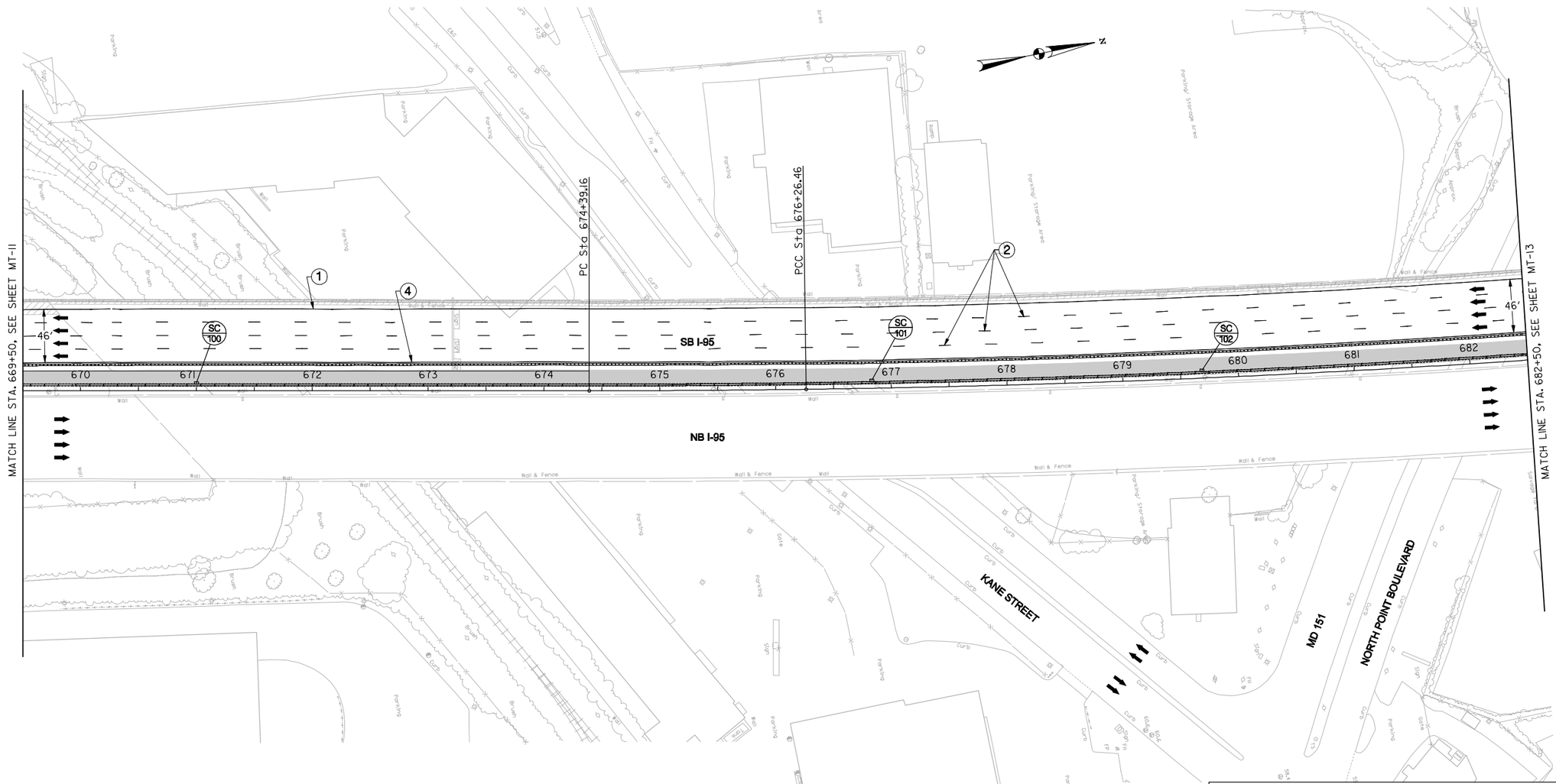

LEGEND

- TEMPORARY CONCRETE TRAFFIC BARRIER FOR MAINTENANCE OF TRAFFIC
- CONSTRUCTION FROM PREVIOUS STAGE
- TEMPORARY SAND FILLED CRASH CUSHION BARRELS
- DRUM PLACEMENT
- TRAFFIC CONTROL SIGN
- PVMS — PORTABLE VARIABLE MESSAGE SIGN
- TEMPORARY STRIPING, TYPE AS NOTED ON PLAN
- PAVEMENT WORK – CURRENT STAGE
- PAVEMENT CONSTRUCTED IN PREVIOUS STAGE

PAVEMENT MARKINGS LEGEND

1. – 5 IN. WHITE REMOVABLE PREFORMED PAVEMENT LINE MARKINGS.
2. – 5 IN. WHITE SKIP REMOVABLE PREFORMED PAVEMENT LINE MARKINGS (10 FT. LINE, 30 FT. GAP).
3. – 5 IN. WHITE SKIP REMOVABLE PREFORMED PAVEMENT LINE MARKINGS (3 FT. LINE, 9 FT. GAP).
4. – 5 IN. YELLOW REMOVABLE PREFORMED PAVEMENT LINE MARKINGS.
5. – 10 IN. WHITE REMOVABLE PREFORMED PAVEMENT LINE MARKINGS.

SCALE IN FEET

50 0 50 100

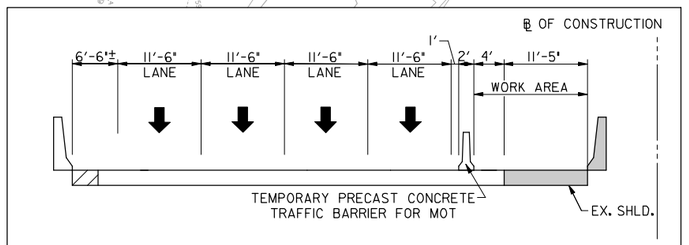

MAINTENANCE OF TRAFFIC TYPICAL SECTION

STA. 669+50 TO STA. 682+50

STAGE 2

RK&K

81 MOSHER STREET | BALTIMORE, MD 21217

PH: (410) 728-2900 FAX: (410) 728-3160

Engineers Construction Managers Planners Scientists

www.rkk.com

MARYLAND TRANSPORTATION AUTHORITY

Engineering Division

ADDENDUMS & REVISIONS

NO.	DESCRIPTION	BY	DATE

I-95 FROM MORAVIA ROAD TO THE FORT McHENRY TUNNEL - PHASE 1 - SOUTHBOUND

I-95 (BALTIMORE CITY)

TRAFFIC CONTROL PLAN

DESIGNED BY A.J.G. | DRAWN BY R.W.T. | CHECKED BY J.M.R.

CONST. REVIEW BY | DATE DECEMBER 2009 | SCALE AS SHOWN

CONTRACT NO. FT 928-000-006

DRAWING NO. **MT-12 OF 27**

SHEET NO. 33 OF 188

TO FORT McHENRY TUNNEL

TO WHITE MARSH

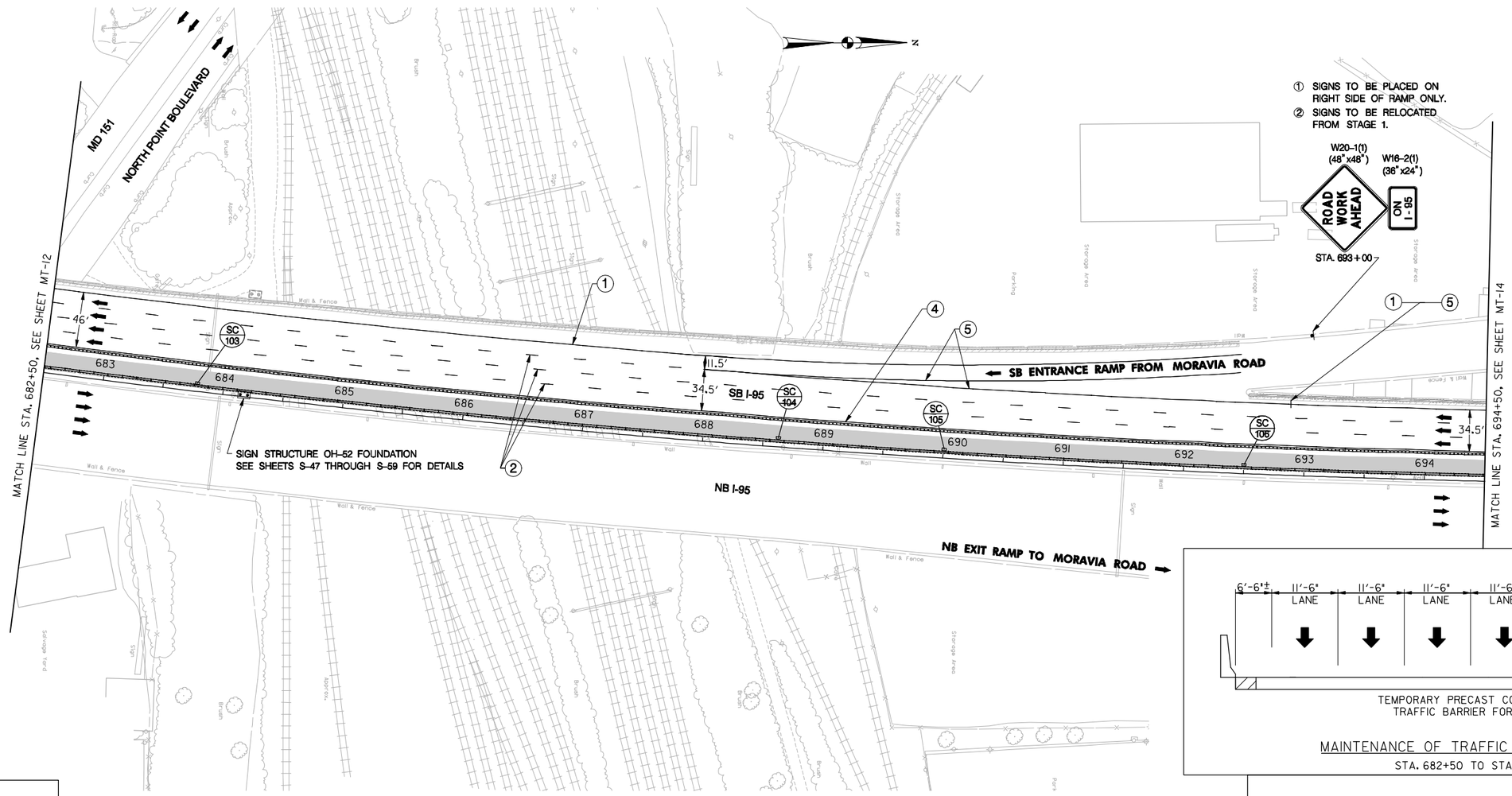

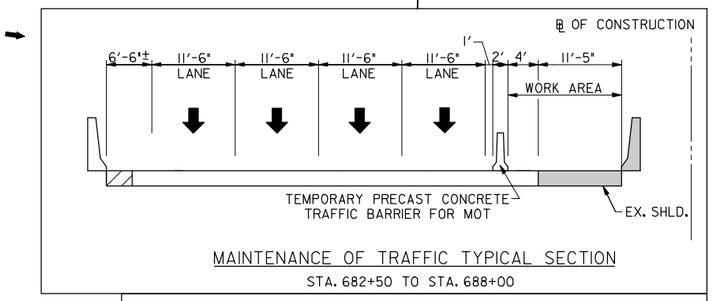

MAINTENANCE OF TRAFFIC TYPICAL SECTION

STA. 682+50 TO STA. 688+00

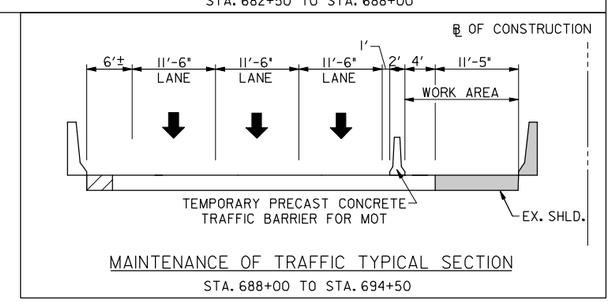

MAINTENANCE OF TRAFFIC TYPICAL SECTION

STA. 688+00 TO STA. 694+50

LEGEND

- TEMPORARY CONCRETE TRAFFIC BARRIER FOR MAINTENANCE OF TRAFFIC
- CONSTRUCTION FROM PREVIOUS STAGE
- TEMPORARY SAND FILLED CRASH CUSHION BARRELS
- DRUM PLACEMENT
- TRAFFIC CONTROL SIGN
- PVMS — PORTABLE VARIABLE MESSAGE SIGN
- TEMPORARY STRIPING, TYPE AS NOTED ON PLAN
- PAVEMENT WORK – CURRENT STAGE
- PAVEMENT CONSTRUCTED IN PREVIOUS STAGE

PAVEMENT MARKINGS LEGEND

1. – 5 IN. WHITE REMOVABLE PREFORMED PAVEMENT LINE MARKINGS.
2. – 5 IN. WHITE SKIP REMOVABLE PREFORMED PAVEMENT LINE MARKINGS (10 FT. LINE, 30 FT. GAP).
3. – 5 IN. WHITE SKIP REMOVABLE PREFORMED PAVEMENT LINE MARKINGS (3 FT. LINE, 9 FT. GAP).
4. – 5 IN. YELLOW REMOVABLE PREFORMED PAVEMENT LINE MARKINGS.
5. – 10 IN. WHITE REMOVABLE PREFORMED PAVEMENT LINE MARKINGS.

SCALE IN FEET

50 0 50 100

STAGE 2

RK&K

81 MOSHER STREET | BALTIMORE, MD 21217

PH: (410) 728-2900 FAX: (410) 728-3160

Engineers Construction Managers Planners Scientists

www.rkk.com

MARYLAND TRANSPORTATION AUTHORITY

Engineering Division

ADDENDUMS & REVISIONS

NO.	DESCRIPTION	BY	DATE

I-95 FROM MORAVIA ROAD TO THE FORT McHENRY TUNNEL - PHASE 1 - SOUTHBOUND

I-95 (BALTIMORE CITY)

TRAFFIC CONTROL PLAN

DESIGNED BY A.J.G.	DRAWN BY R.W.T.	CHECKED BY J.M.R.
CONST. REVIEW BY	DATE DECEMBER 2009	SCALE AS SHOWN

CONTRACT NO. FT 928-000-006

DRAWING NO. **MT-13 OF 27**

SHEET NO. 34 OF 188

M:\projects\2005\05041_mdta\Task 13 - Moravia to FMT Design\CADD\Phase I - SB\Plans\PMT-P212_plsb_195.dgn

Thursday, December 03, 2009 AT 12:30 PM

TO FORT McHENRY TUNNEL

TO WHITE MARSH

① SIGNS TO BE PLACED ON RIGHT SIDE OF RAMP ONLY.

② SIGNS TO BE RELOCATED FROM STAGE 1.

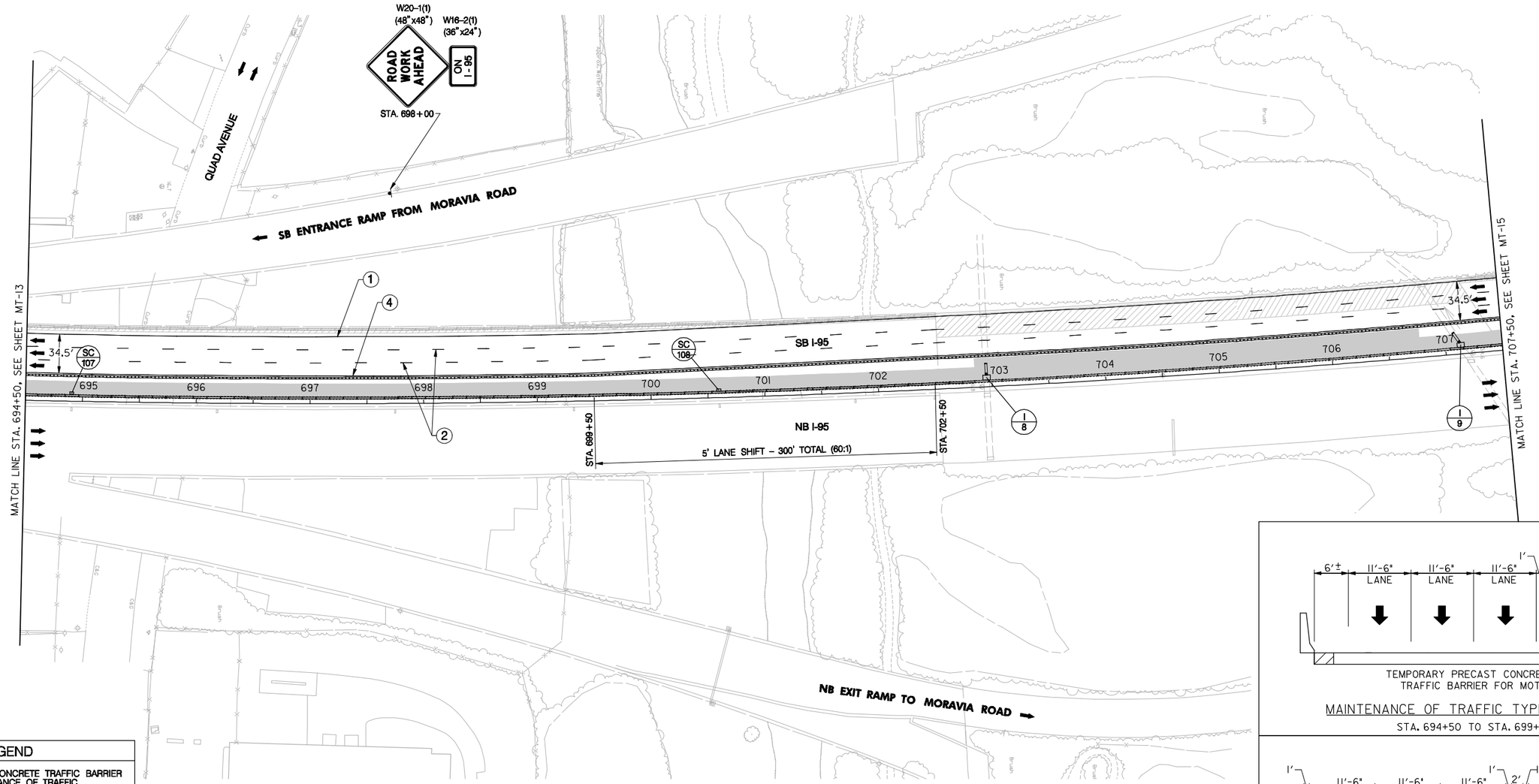

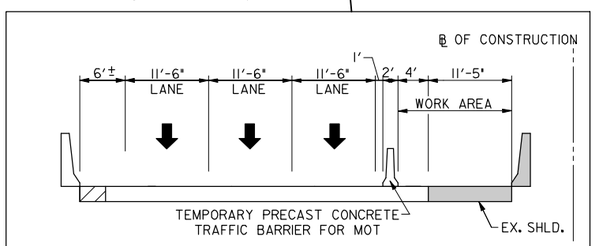

MAINTENANCE OF TRAFFIC TYPICAL SECTION

STA. 694+50 TO STA. 699+50

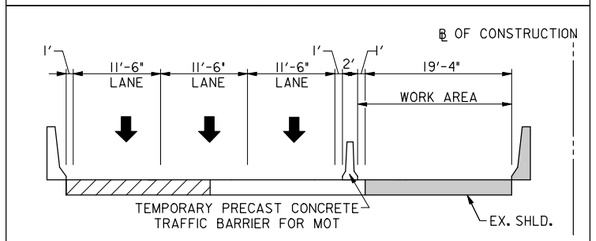

MAINTENANCE OF TRAFFIC TYPICAL SECTION

STA. 702+50 TO STA. 707+50

LEGEND

- TEMPORARY CONCRETE TRAFFIC BARRIER FOR MAINTENANCE OF TRAFFIC
- CONSTRUCTION FROM PREVIOUS STAGE
- TEMPORARY SAND FILLED CRASH CUSHION BARRELS
- DRUM PLACEMENT
- TRAFFIC CONTROL SIGN
- PVMS — PORTABLE VARIABLE MESSAGE SIGN
- TEMPORARY STRIPING, TYPE AS NOTED ON PLAN
- PAVEMENT WORK – CURRENT STAGE
- PAVEMENT CONSTRUCTED IN PREVIOUS STAGE

PAVEMENT MARKINGS LEGEND

1. – 5 IN. WHITE REMOVABLE PREFORMED PAVEMENT LINE MARKINGS.
2. – 5 IN. WHITE SKIP REMOVABLE PREFORMED PAVEMENT LINE MARKINGS (10 FT. LINE, 30 FT. GAP).
3. – 5 IN. WHITE SKIP REMOVABLE PREFORMED PAVEMENT LINE MARKINGS (3 FT. LINE, 9 FT. GAP).
4. – 5 IN. YELLOW REMOVABLE PREFORMED PAVEMENT LINE MARKINGS.
5. – 10 IN. WHITE REMOVABLE PREFORMED PAVEMENT LINE MARKINGS.

SCALE IN FEET

50 0 50 100

STAGE 2

RK&K

81 MOSHER STREET | BALTIMORE, MD 21217

PH: (410) 728-2900 FAX: (410) 728-3160

Engineers Construction Managers Planners Scientists

www.rkk.com

MARYLAND TRANSPORTATION AUTHORITY

Engineering Division

ADDENDUMS & REVISIONS			
NO.	DESCRIPTION	BY	DATE

I-95 FROM MORAVIA ROAD TO THE FORT McHENRY TUNNEL - PHASE 1 - SOUTHBOUND

I-95 (BALTIMORE CITY)

TRAFFIC CONTROL PLAN

DESIGNED BY A.J.G.	DRAWN BY R.W.T.	CHECKED BY J.M.R.
CONST. REVIEW BY	DATE DECEMBER 2009	SCALE AS SHOWN

CONTRACT NO. FT 928-000-006

DRAWING NO. **MT-14 OF 27**

SHEET NO. 35 OF 188

TO FORT McHENRY TUNNEL

TO WHITE MARSH

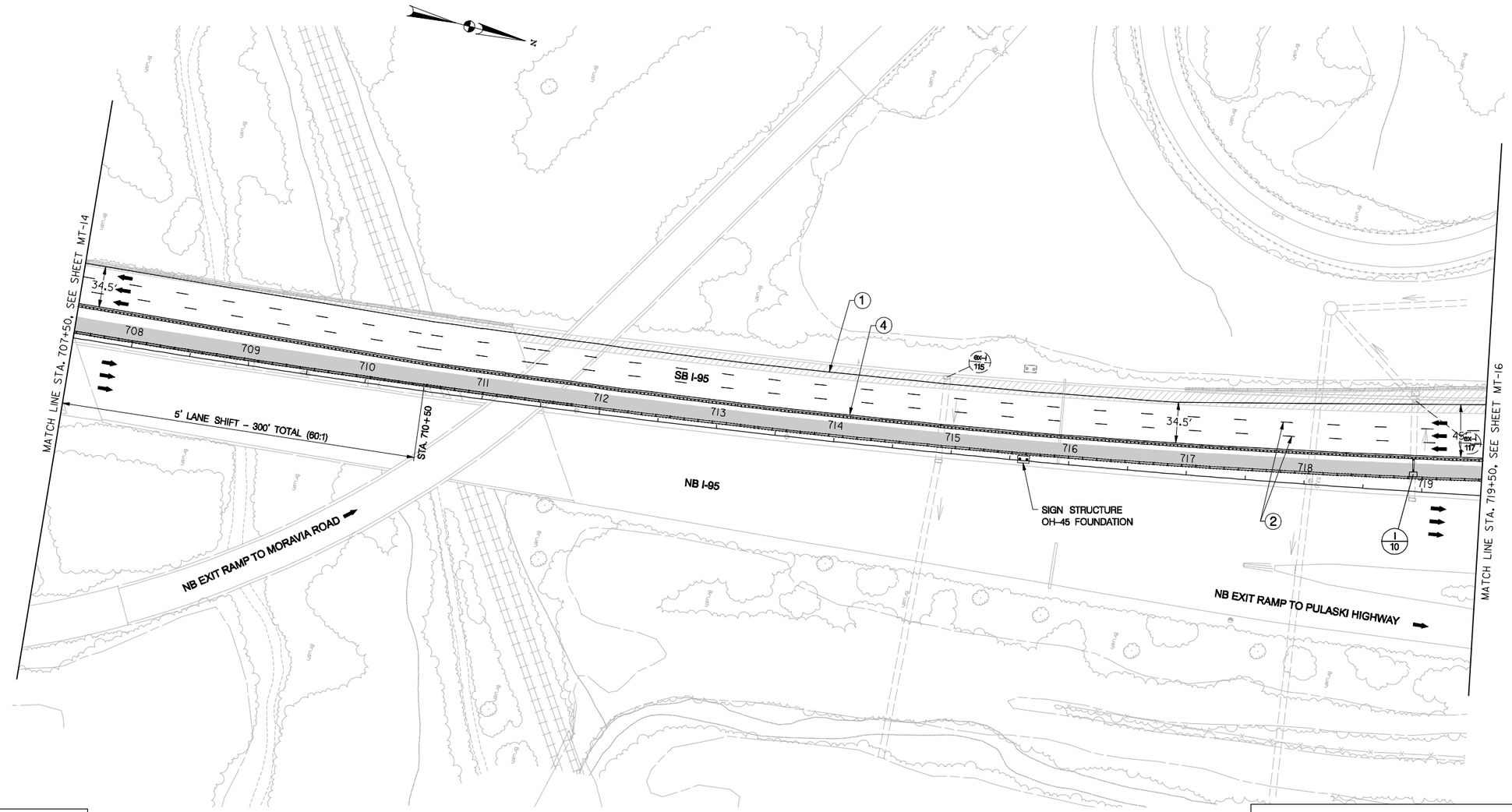

LEGEND

- TEMPORARY CONCRETE TRAFFIC BARRIER FOR MAINTENANCE OF TRAFFIC
- CONSTRUCTION FROM PREVIOUS STAGE
- TEMPORARY SAND FILLED CRASH CUSHION BARRELS
- DRUM PLACEMENT
- TRAFFIC CONTROL SIGN
- PVMS — PORTABLE VARIABLE MESSAGE SIGN
- TEMPORARY STRIPING, TYPE AS NOTED ON PLAN
- PAVEMENT WORK – CURRENT STAGE
- PAVEMENT CONSTRUCTED IN PREVIOUS STAGE

PAVEMENT MARKINGS LEGEND

1. – 5 IN. WHITE REMOVABLE PREFORMED PAVEMENT LINE MARKINGS.
2. – 5 IN. WHITE SKIP REMOVABLE PREFORMED PAVEMENT LINE MARKINGS (10 FT. LINE, 30 FT. GAP).
3. – 5 IN. WHITE SKIP REMOVABLE PREFORMED PAVEMENT LINE MARKINGS (3 FT. LINE, 9 FT. GAP).
4. – 5 IN. YELLOW REMOVABLE PREFORMED PAVEMENT LINE MARKINGS.
5. – 10 IN. WHITE REMOVABLE PREFORMED PAVEMENT LINE MARKINGS.

SCALE IN FEET

50 0 50 100

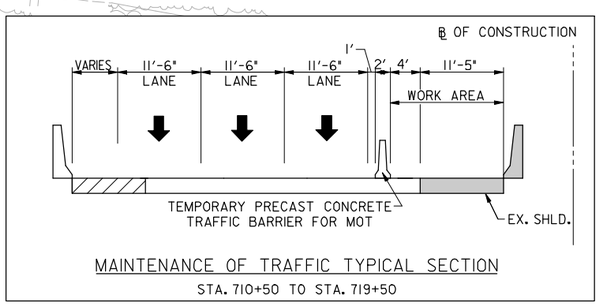

MAINTENANCE OF TRAFFIC TYPICAL SECTION

STA. 710+50 TO STA. 719+50

STAGE 2

RK&K

81 MOSHER STREET | BALTIMORE, MD 21217

PH: (410) 728-2900 FAX: (410) 728-3160

Engineers Construction Managers Planners Scientists

www.rkk.com

MARYLAND TRANSPORTATION AUTHORITY

Engineering Division

ADDENDUMS & REVISIONS			
NO.	DESCRIPTION	BY	DATE

I-95 FROM MORAVIA ROAD TO THE FORT McHENRY TUNNEL - PHASE 1 - SOUTHBOUND

I-95 (BALTIMORE CITY)

TRAFFIC CONTROL PLAN

DESIGNED BY A.J.G.	DRAWN BY R.W.T.	CHECKED BY J.M.R.
CONST. REVIEW BY	DATE DECEMBER 2009	SCALE AS SHOWN

CONTRACT NO. FT 928-000-006

DRAWING NO. **MT-15 OF 27**

SHEET NO. 36 OF 188

TO FORT McHENRY TUNNEL

TO WHITE MARSH

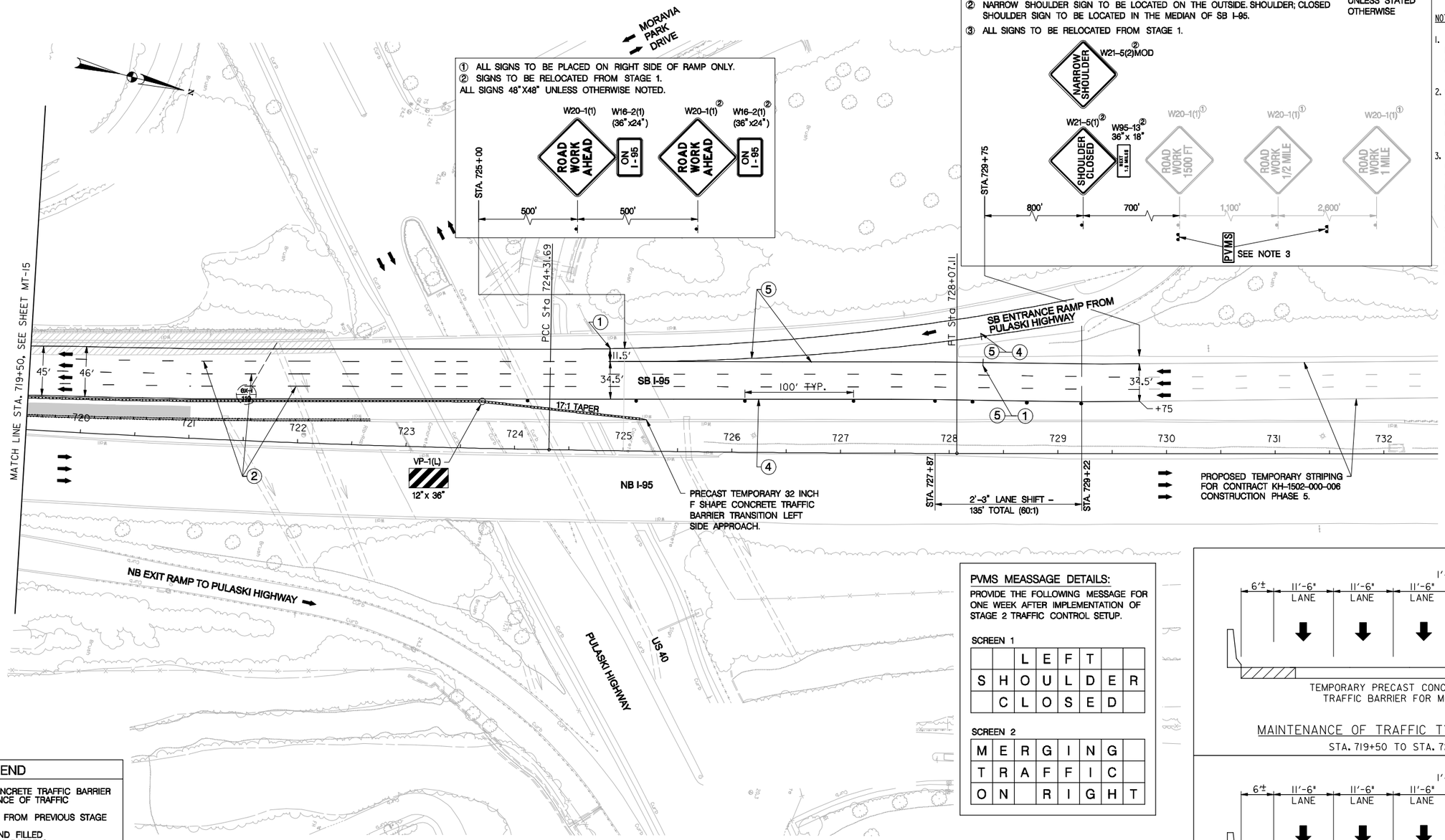

NOTES:

1. ROAD WORK SIGNS (W20-1) TO BE USED IF I-95 EXPRESS TOLL LANE PROJECT ONLY (KH-1502-000-006) HAS COMPLETED CONSTRUCTION AND REMOVED MOT SIGNING.
2. CHANNELIZING DEVICES TO BE TAPERED APPROPRIATELY IF I-95 EXPRESS TOLL LANE PROJECT (KH-1502-000-006) HAS COMPLETED CONSTRUCTION. SEE TRAFFIC CONTROL GENERAL NOTES.
3. PVMS TO BE LOCATED 800 FEET IN ADVANCE OF NARROW SHOULDER (W21-5(1) MOD) AND SHOULDER CLOSED (W21-5(1)) SIGNS IF I-95 EXPRESS TOLL LANE PROJECT (KH-1502-000-006) IS ONGOING OR BETWEEN THE ROAD WORK 1/2 MILE (W20-1) AND ROAD WORK 1 MILE (W20-1) SIGNS IF THE KH-1502-000-006 CONSTRUCTION IS COMPLETED. PVMS TO BE PLACED IN THE MEDIAN AND ON THE OUTSIDE OF SB I-95. SEE DETAIL ON THIS SHEET FOR PVMS MESSAGE DETAILS. SEE TRAFFIC CONTROL GENERAL NOTE 11 FOR PVMS MESSAGE APPROVAL.

THE CONTRACTOR SHALL COORDINATE MAINTENANCE OF TRAFFIC WITH THE ON-GOING KH-1502-000-006 CONSTRUCTION. SEE TRAFFIC CONTROL GENERAL NOTES.

PVMS MEASSAGE DETAILS:

PROVIDE THE FOLLOWING MESSAGE FOR ONE WEEK AFTER IMPLEMENTATION OF STAGE 2 TRAFFIC CONTROL SETUP.

SCREEN 1

		L	E	F	T	
S	H	O	U	L	D	E	R
	C	L	O	S	E	D	

SCREEN 2

M	E	R	G	I	N	G	
T	R	A	F	F	I	C	
O	N		R	I	G	H	T

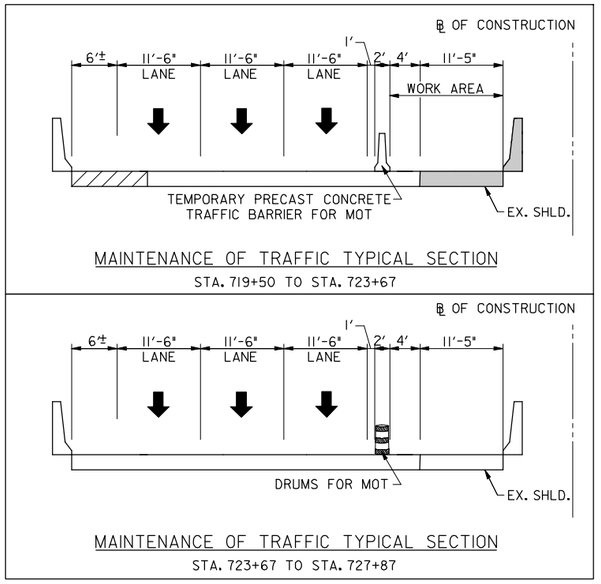

LEGEND

- TEMPORARY CONCRETE TRAFFIC BARRIER FOR MAINTENANCE OF TRAFFIC
- CONSTRUCTION FROM PREVIOUS STAGE
- TEMPORARY SAND FILLED CRASH CUSHION BARRELS
- DRUM PLACEMENT
- TRAFFIC CONTROL SIGN
- PVMS — PORTABLE VARIABLE MESSAGE SIGN
- TEMPORARY STRIPING, TYPE AS NOTED ON PLAN
- PAVEMENT WORK – CURRENT STAGE
- PAVEMENT CONSTRUCTED IN PREVIOUS STAGE

PAVEMENT MARKINGS LEGEND

1. – 5 IN. WHITE REMOVABLE PREFORMED PAVEMENT LINE MARKINGS.
2. – 5 IN. WHITE SKIP REMOVABLE PREFORMED PAVEMENT LINE MARKINGS (10 FT. LINE, 30 FT. GAP).
3. – 5 IN. WHITE SKIP REMOVABLE PREFORMED PAVEMENT LINE MARKINGS (3 FT. LINE, 9 FT. GAP).
4. – 5 IN. YELLOW REMOVABLE PREFORMED PAVEMENT LINE MARKINGS.
5. – 10 IN. WHITE REMOVABLE PREFORMED PAVEMENT LINE MARKINGS.

SCALE IN FEET
50 0 50 100

STAGE 2

RK&K
81 MOSHER STREET | BALTIMORE, MD 21217
PH: (410) 728-2900 FAX: (410) 728-3160
Engineers Construction Managers Planners Scientists
www.rkk.com

MARYLAND TRANSPORTATION AUTHORITY
Engineering Division

ADDENDUMS & REVISIONS

NO.	DESCRIPTION	BY	DATE

I-95 FROM MORAVIA ROAD TO THE FORT McHENRY TUNNEL - PHASE 1 - SOUTHBOUND
I-95 (BALTIMORE CITY)
TRAFFIC CONTROL PLAN

DESIGNED BY A.J.G. | DRAWN BY R.W.T. | CHECKED BY J.M.R.
CONST. REVIEW BY | DATE DECEMBER 2009 | SCALE AS SHOWN

CONTRACT NO. FT 928-000-006
DRAWING NO. MT-16 OF 27
SHEET NO. 37 OF 188

TO FORT McHENRY TUNNEL

TO WHITE MARSH

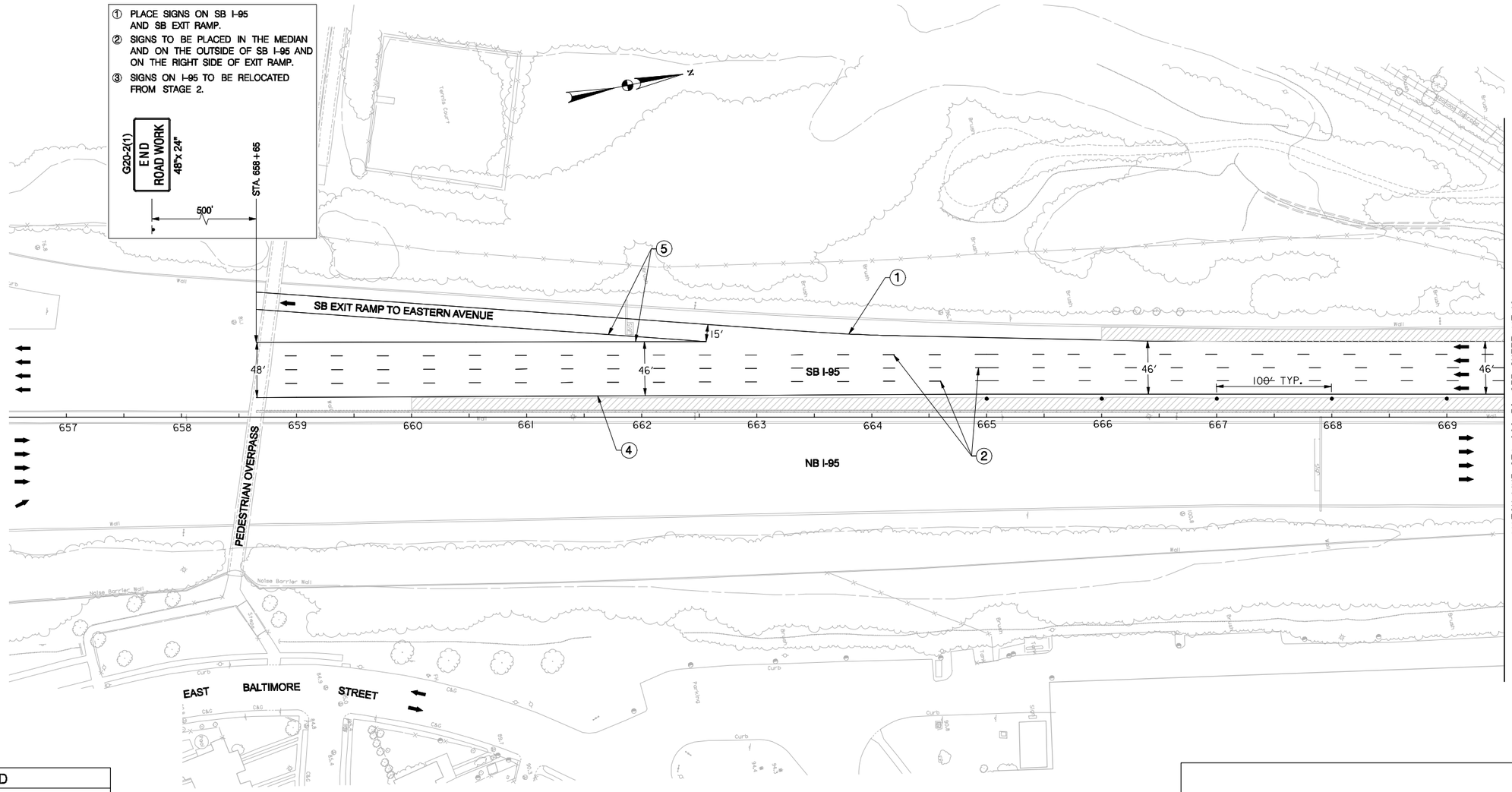

LEGEND

- TEMPORARY CONCRETE TRAFFIC BARRIER FOR MAINTENANCE OF TRAFFIC
- CONSTRUCTION FROM PREVIOUS STAGE
- TEMPORARY SAND FILLED CRASH CUSHION BARRELS
- DRUM PLACEMENT
- TRAFFIC CONTROL SIGN
- PVMS — PORTABLE VARIABLE MESSAGE SIGN
- TEMPORARY STRIPING, TYPE AS NOTED ON PLAN
- PAVEMENT WORK – CURRENT STAGE
- PAVEMENT CONSTRUCTED IN PREVIOUS STAGE

PAVEMENT MARKINGS LEGEND

1. – 5 IN. WHITE REMOVABLE PREFORMED PAVEMENT LINE MARKINGS.
2. – 5 IN. WHITE SKIP REMOVABLE PREFORMED PAVEMENT LINE MARKINGS (10 FT. LINE, 30 FT. GAP).
3. – 5 IN. WHITE SKIP REMOVABLE PREFORMED PAVEMENT LINE MARKINGS (3 FT. LINE, 9 FT. GAP).
4. – 5 IN. YELLOW REMOVABLE PREFORMED PAVEMENT LINE MARKINGS.
5. – 10 IN. WHITE REMOVABLE PREFORMED PAVEMENT LINE MARKINGS.

SCALE IN FEET

50 0 50 100

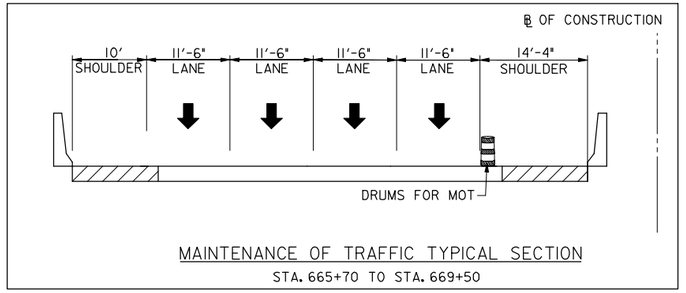

MAINTENANCE OF TRAFFIC TYPICAL SECTION

STA. 665+70 TO STA. 669+50

STAGE 3

RK&K

81 MOSHER STREET | BALTIMORE, MD 21217

PH: (410) 728-2900 FAX: (410) 728-3160

Engineers Construction Managers Planners Scientists

www.rkk.com

MARYLAND TRANSPORTATION AUTHORITY

Engineering Division

ADDENDUMS & REVISIONS

NO.	DESCRIPTION	BY	DATE

I-95 FROM MORAVIA ROAD TO THE FORT McHENRY TUNNEL - PHASE 1 - SOUTHBOUND

I-95 (BALTIMORE CITY)

TRAFFIC CONTROL PLAN

DESIGNED BY A.J.G.	DRAWN BY R.W.T.	CHECKED BY J.M.R.
CONST. REVIEW BY	DATE DECEMBER 2009	SCALE AS SHOWN

CONTRACT NO. FT 928-000-006

DRAWING NO. **MT-17 OF 27**

SHEET NO. 38 OF 188

TO FORT McHENRY TUNNEL

TO WHITE MARSH

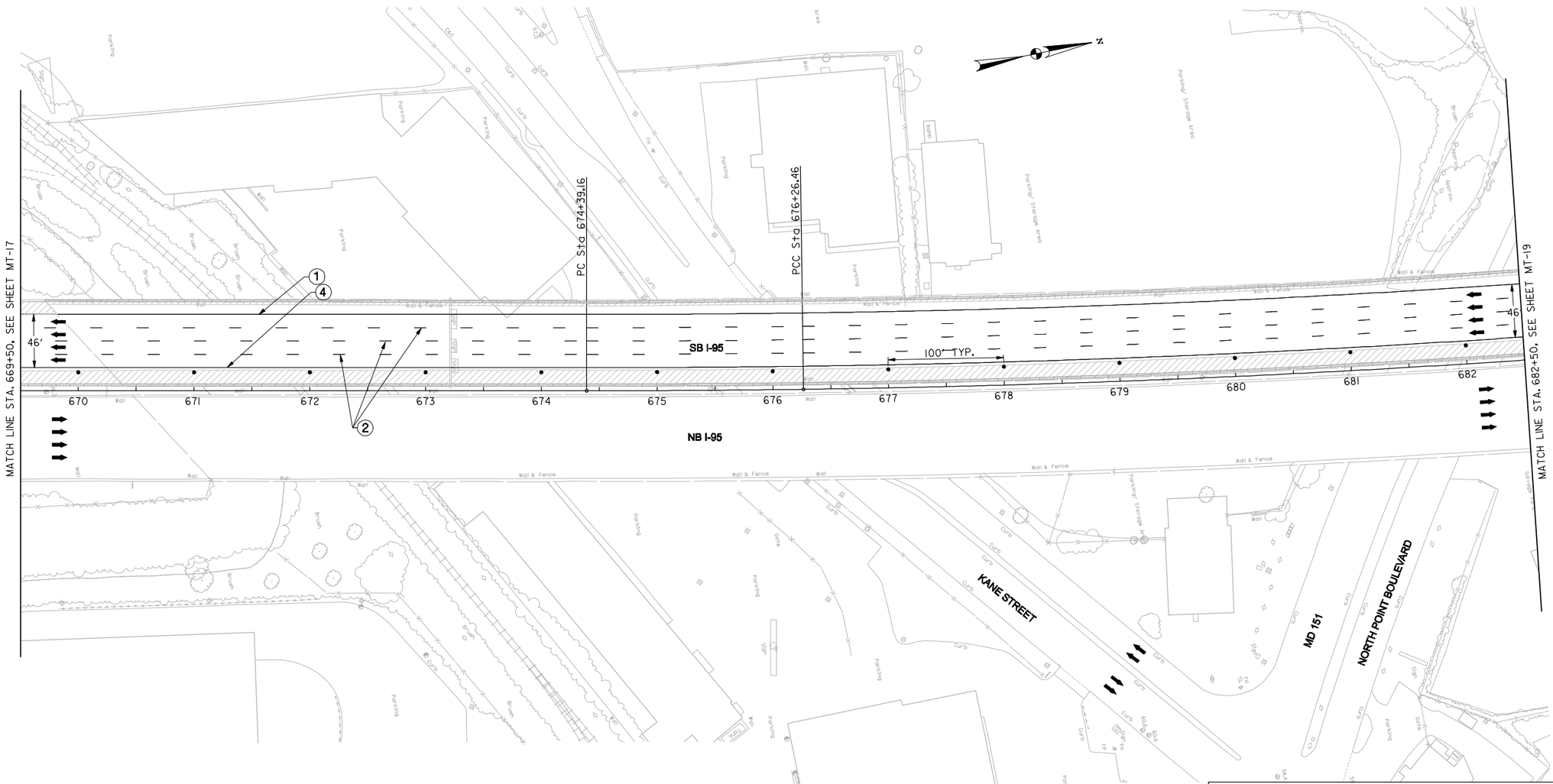

LEGEND

- TEMPORARY CONCRETE TRAFFIC BARRIER FOR MAINTENANCE OF TRAFFIC
- CONSTRUCTION FROM PREVIOUS STAGE
- TEMPORARY SAND FILLED CRASH CUSHION BARRELS
- DRUM PLACEMENT
- TRAFFIC CONTROL SIGN
- PVMS — PORTABLE VARIABLE MESSAGE SIGN
- TEMPORARY STRIPING, TYPE AS NOTED ON PLAN
- PAVEMENT WORK – CURRENT STAGE
- PAVEMENT CONSTRUCTED IN PREVIOUS STAGE

PAVEMENT MARKINGS LEGEND

1. – 5 IN. WHITE REMOVABLE PREFORMED PAVEMENT LINE MARKINGS.
2. – 5 IN. WHITE SKIP REMOVABLE PREFORMED PAVEMENT LINE MARKINGS (10 FT. LINE, 30 FT. GAP).
3. – 5 IN. WHITE SKIP REMOVABLE PREFORMED PAVEMENT LINE MARKINGS (3 FT. LINE, 9 FT. GAP).
4. – 5 IN. YELLOW REMOVABLE PREFORMED PAVEMENT LINE MARKINGS.
5. – 10 IN. WHITE REMOVABLE PREFORMED PAVEMENT LINE MARKINGS.

SCALE IN FEET

50 0 50 100

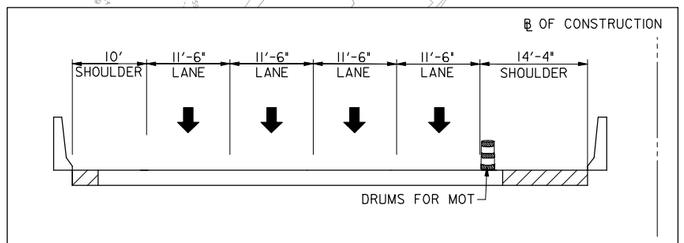

MAINTENANCE OF TRAFFIC TYPICAL SECTION

STA. 669+50 TO STA. 682+50

STAGE 3

RK&K

81 MOSHER STREET | BALTIMORE, MD 21217

PH: (410) 728-2900 FAX: (410) 728-3160

Engineers Construction Managers Planners Scientists

www.rkk.com

MARYLAND TRANSPORTATION AUTHORITY

Engineering Division

ADDENDUMS & REVISIONS			
NO.	DESCRIPTION	BY	DATE

I-95 FROM MORAVIA ROAD TO THE FORT McHENRY TUNNEL - PHASE 1 - SOUTHBOUND

I-95 (BALTIMORE CITY)

TRAFFIC CONTROL PLAN

DESIGNED BY A.J.G.	DRAWN BY R.W.T.	CHECKED BY J.M.R.
CONST. REVIEW BY	DATE DECEMBER 2009	SCALE AS SHOWN

CONTRACT NO. FT 928-000-006

DRAWING NO. **MT-18 OF 27**

SHEET NO. 39 OF 188

TO FORT McHENRY TUNNEL

TO WHITE MARSH

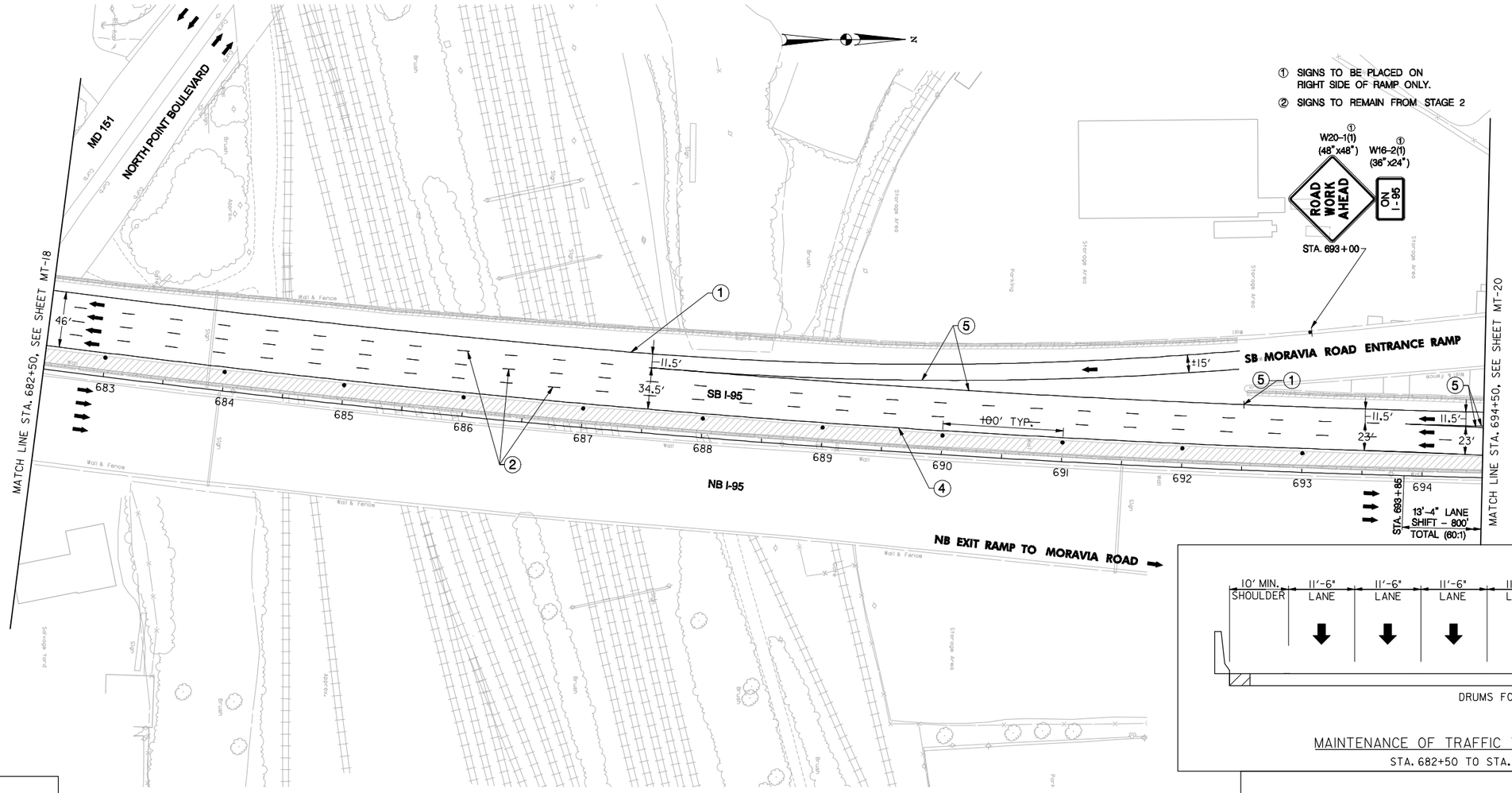

① SIGNS TO BE PLACED ON RIGHT SIDE OF RAMP ONLY.

② SIGNS TO REMAIN FROM STAGE 2

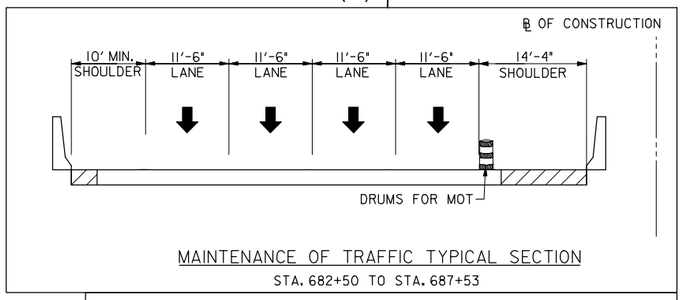

MAINTENANCE OF TRAFFIC TYPICAL SECTION

STA. 682+50 TO STA. 687+53

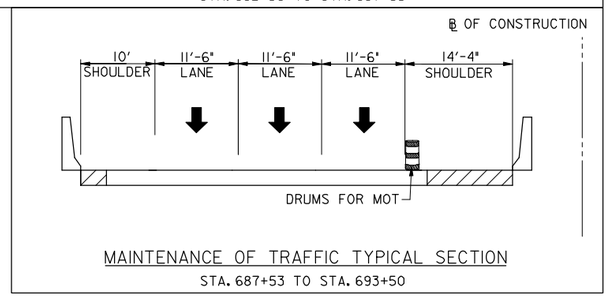

MAINTENANCE OF TRAFFIC TYPICAL SECTION

STA. 687+53 TO STA. 693+50

LEGEND

- TEMPORARY CONCRETE TRAFFIC BARRIER FOR MAINTENANCE OF TRAFFIC
- CONSTRUCTION FROM PREVIOUS STAGE
- TEMPORARY SAND FILLED CRASH CUSHION BARRELS
- DRUM PLACEMENT
- TRAFFIC CONTROL SIGN
- PVMS — PORTABLE VARIABLE MESSAGE SIGN
- TEMPORARY STRIPING, TYPE AS NOTED ON PLAN
- PAVEMENT WORK – CURRENT STAGE
- PAVEMENT CONSTRUCTED IN PREVIOUS STAGE

PAVEMENT MARKINGS LEGEND

1. – 5 IN. WHITE REMOVABLE PREFORMED PAVEMENT LINE MARKINGS.
2. – 5 IN. WHITE SKIP REMOVABLE PREFORMED PAVEMENT LINE MARKINGS (10 FT. LINE, 30 FT. GAP).
3. – 5 IN. WHITE SKIP REMOVABLE PREFORMED PAVEMENT LINE MARKINGS (3 FT. LINE, 9 FT. GAP).
4. – 5 IN. YELLOW REMOVABLE PREFORMED PAVEMENT LINE MARKINGS.
5. – 10 IN. WHITE REMOVABLE PREFORMED PAVEMENT LINE MARKINGS.

SCALE IN FEET

50 0 50 100

STAGE 3

RK&K

81 MOSHER STREET | BALTIMORE, MD 21217

PH: (410) 728-2900 FAX: (410) 728-3160

Engineers Construction Managers Planners Scientists

www.rkk.com

MARYLAND TRANSPORTATION AUTHORITY

Engineering Division

ADDENDUMS & REVISIONS

NO.	DESCRIPTION	BY	DATE

I-95 FROM MORAVIA ROAD TO THE FORT McHENRY TUNNEL - PHASE 1 - SOUTHBOUND

I-95 (BALTIMORE CITY)

TRAFFIC CONTROL PLAN

DESIGNED BY A.J.G.	DRAWN BY R.W.T.	CHECKED BY J.M.R.
CONST. REVIEW BY	DATE DECEMBER 2009	SCALE AS SHOWN

CONTRACT NO. FT 928-000-006

DRAWING NO. **MT-19 OF 27**

SHEET NO. 40 OF 188

M:\projects\2005\0504I_mdta\Task 13 - Moravia to FMT Design\CADD\Phase 1 - SB\Plans\PMT-P318_plsb_195.dgn

Thursday, December 03, 2009 AT 12:34 PM

TO FORT McHENRY TUNNEL

TO WHITE MARSH

① SIGNS TO BE PLACED ON RIGHT SIDE OF RAMP ONLY.
② SIGNS TO REMAIN FROM STAGE 2.

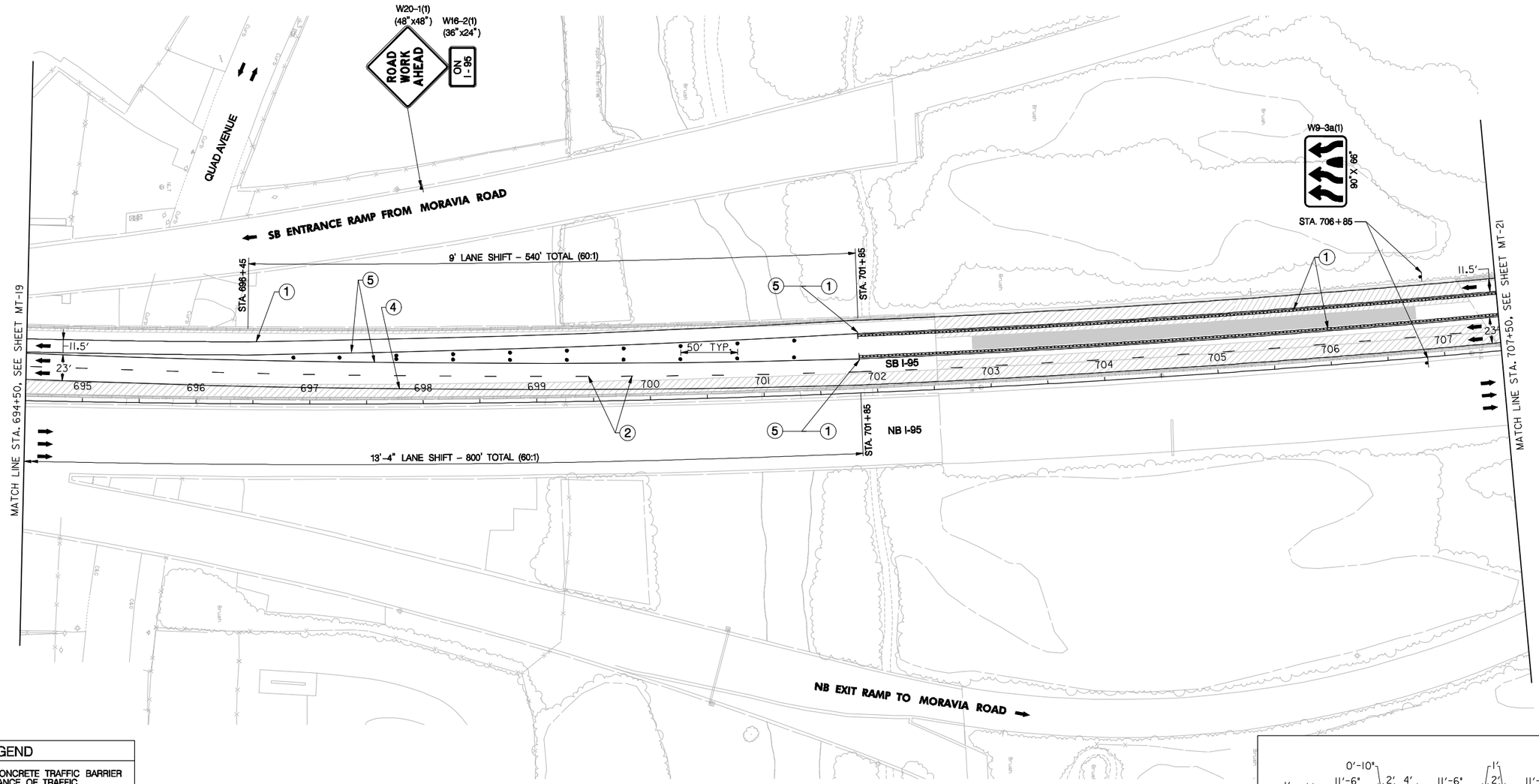

LEGEND

- TEMPORARY CONCRETE TRAFFIC BARRIER FOR MAINTENANCE OF TRAFFIC
- CONSTRUCTION FROM PREVIOUS STAGE
- TEMPORARY SAND FILLED CRASH CUSHION BARRELS
- DRUM PLACEMENT
- TRAFFIC CONTROL SIGN
- PVMS — PORTABLE VARIABLE MESSAGE SIGN
- TEMPORARY STRIPING, TYPE AS NOTED ON PLAN
- PAVEMENT WORK – CURRENT STAGE
- PAVEMENT CONSTRUCTED IN PREVIOUS STAGE

PAVEMENT MARKINGS LEGEND

1. – 5 IN. WHITE REMOVABLE PREFORMED PAVEMENT LINE MARKINGS.
2. – 5 IN. WHITE SKIP REMOVABLE PREFORMED PAVEMENT LINE MARKINGS (10 FT. LINE, 30 FT. GAP).
3. – 5 IN. WHITE SKIP REMOVABLE PREFORMED PAVEMENT LINE MARKINGS (3 FT. LINE, 9 FT. GAP).
4. – 5 IN. YELLOW REMOVABLE PREFORMED PAVEMENT LINE MARKINGS.
5. – 10 IN. WHITE REMOVABLE PREFORMED PAVEMENT LINE MARKINGS.

SCALE IN FEET
50 0 50 100

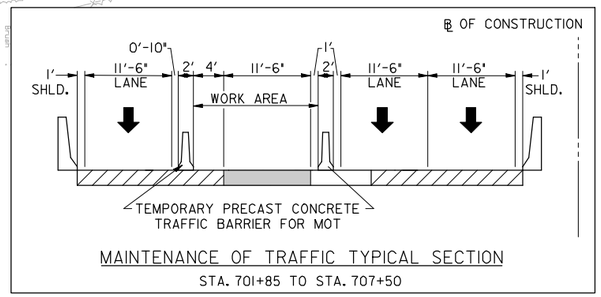

MAINTENANCE OF TRAFFIC TYPICAL SECTION
STA. 701+85 TO STA. 707+50

STAGE 3

RK&K
81 MOSHER STREET | BALTIMORE, MD 21217
PH: (410) 728-2900 FAX: (410) 728-3160
Engineers Construction Managers Planners Scientists
www.rkk.com

MARYLAND TRANSPORTATION AUTHORITY
Engineering Division

ADDENDUMS & REVISIONS			
NO.	DESCRIPTION	BY	DATE

I-95 FROM MORAVIA ROAD TO THE FORT McHENRY TUNNEL - PHASE 1 - SOUTHBOUND

I-95 (BALTIMORE CITY)

TRAFFIC CONTROL PLAN

DESIGNED BY A.J.G.	DRAWN BY R.W.T.	CHECKED BY J.M.R.
CONST. REVIEW BY	DATE DECEMBER 2009	SCALE AS SHOWN

CONTRACT NO. FT 928-000-006

DRAWING NO. **MT-20 OF 27**

SHEET NO. 41 OF 188

TO FORT McHENRY TUNNEL

TO WHITE MARSH

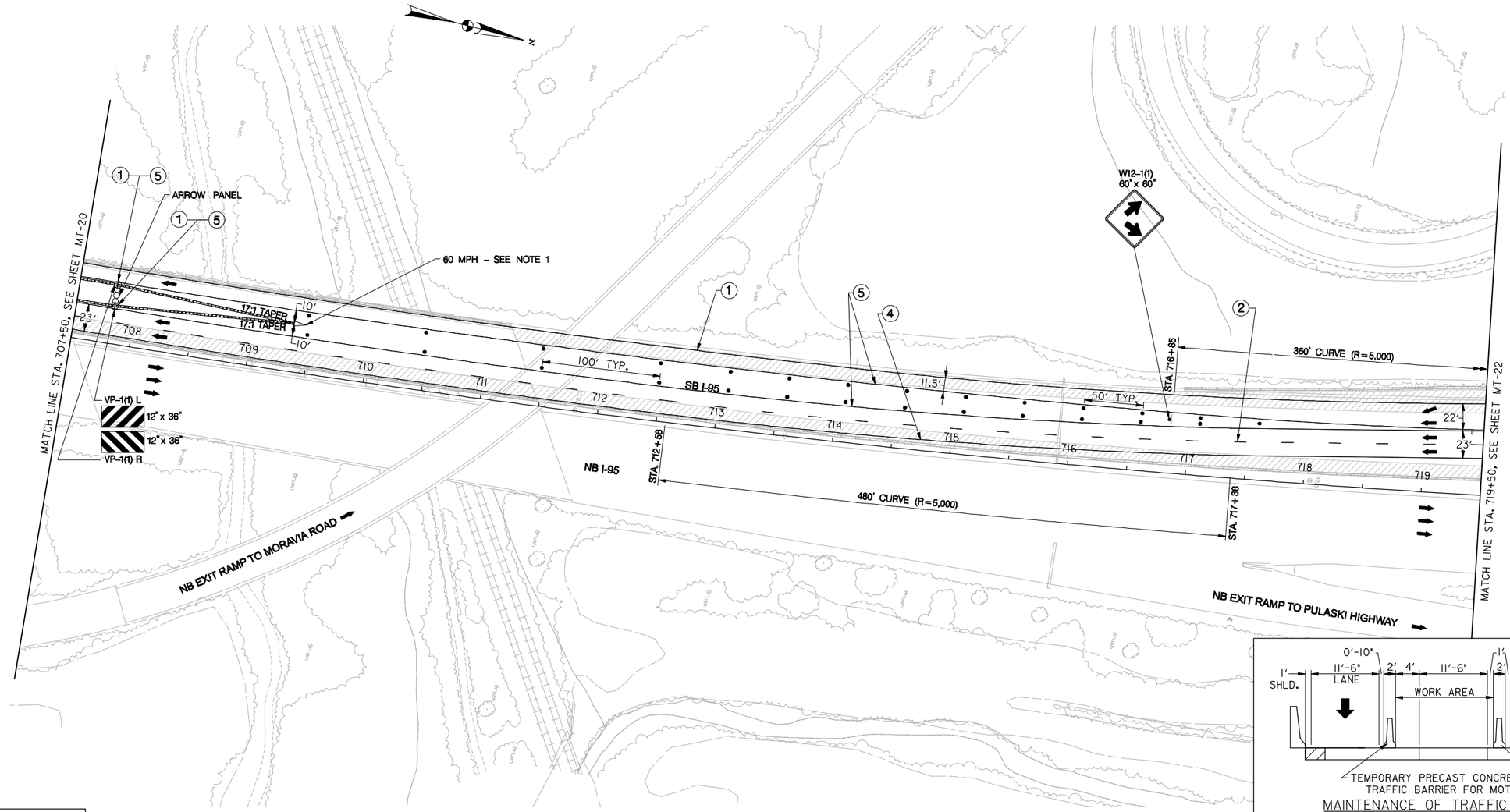

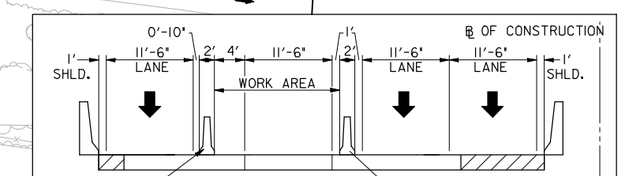

MAINTENANCE OF TRAFFIC TYPICAL SECTION

STA. 707+50 TO STA. 707+78

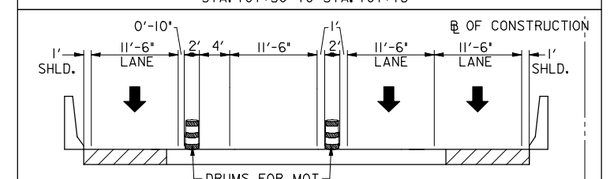

MAINTENANCE OF TRAFFIC TYPICAL SECTION

STA. 707+78 TO STA. 712+58

LEGEND

- TEMPORARY CONCRETE TRAFFIC BARRIER FOR MAINTENANCE OF TRAFFIC
- CONSTRUCTION FROM PREVIOUS STAGE
- TEMPORARY SAND FILLED CRASH CUSHION BARRELS
- DRUM PLACEMENT
- TRAFFIC CONTROL SIGN
- PVMS — PORTABLE VARIABLE MESSAGE SIGN
- TEMPORARY STRIPING, TYPE AS NOTED ON PLAN
- PAVEMENT WORK – CURRENT STAGE
- PAVEMENT CONSTRUCTED IN PREVIOUS STAGE

PAVEMENT MARKINGS LEGEND

1. – 5 IN. WHITE REMOVABLE PREFORMED PAVEMENT LINE MARKINGS.
2. – 5 IN. WHITE SKIP REMOVABLE PREFORMED PAVEMENT LINE MARKINGS (10 FT. LINE, 30 FT. GAP).
3. – 5 IN. WHITE SKIP REMOVABLE PREFORMED PAVEMENT LINE MARKINGS (3 FT. LINE, 9 FT. GAP).
4. – 5 IN. YELLOW REMOVABLE PREFORMED PAVEMENT LINE MARKINGS.
5. – 10 IN. WHITE REMOVABLE PREFORMED PAVEMENT LINE MARKINGS.

NOTES:

1. PLACE OM-3(3) SIGN APPROACH END OF LEADING TEMPORARY SAND FILLED CRASH CUSHION BARREL.

SCALE IN FEET

50 0 50 100

STAGE 3

RK&K

81 MOSHER STREET | BALTIMORE, MD 21217

PH: (410) 728-2900 FAX: (410) 728-3160

Engineers Construction Managers Planners Scientists

www.rkk.com

MARYLAND TRANSPORTATION AUTHORITY

Engineering Division

ADDENDUMS & REVISIONS			
NO.	DESCRIPTION	BY	DATE

I-95 FROM MORAVIA ROAD TO THE FORT McHENRY TUNNEL - PHASE 1 - SOUTHBOUND

I-95 (BALTIMORE CITY)

TRAFFIC CONTROL PLAN

DESIGNED BY A.J.G.	DRAWN BY R.W.T.	CHECKED BY J.M.R.
CONST. REVIEW BY	DATE DECEMBER 2009	SCALE AS SHOWN

CONTRACT NO. FT 928-000-006

DRAWING NO. **MT-21 OF 27**

SHEET NO. 42 OF 188

TO FORT McHENRY TUNNEL

TO WHITE MARSH

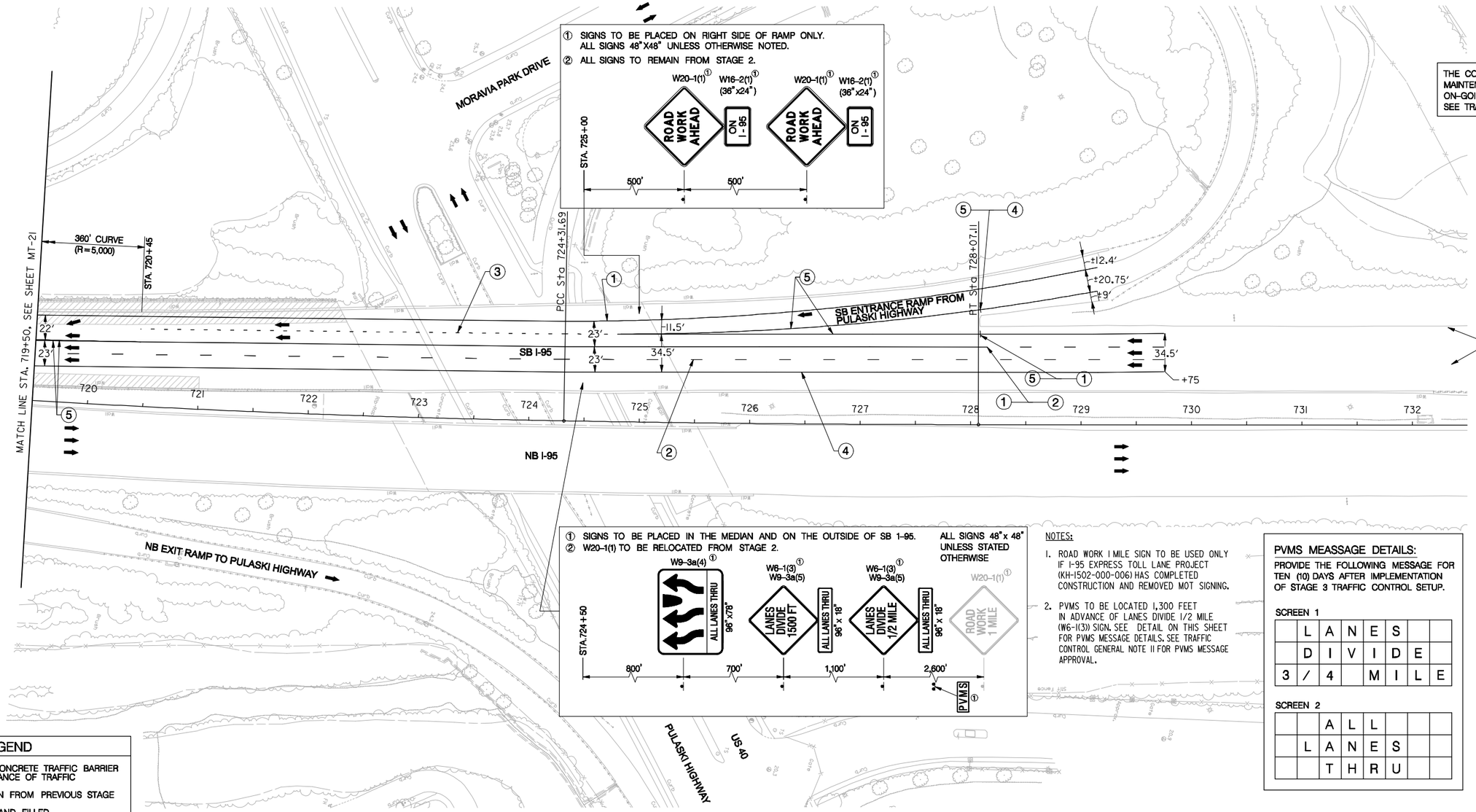

① SIGNS TO BE PLACED ON RIGHT SIDE OF RAMP ONLY. ALL SIGNS 48"X48" UNLESS OTHERWISE NOTED.
② ALL SIGNS TO REMAIN FROM STAGE 2.

STA. 725+00 — W20-1(1)① ROAD WORK AHEAD — W16-2(1)① (36"x24") ON I-95 — 500' — W20-1(1)① ROAD WORK AHEAD — W16-2(1)① (36"x24") ON I-95 — 500'

THE CONTRACTOR SHALL COORDINATE MAINTENANCE OF TRAFFIC WITH THE ON-GOING KH-1502-000-006 CONSTRUCTION. SEE TRAFFIC CONTROL GENERAL NOTES.

PROPOSED TEMPORARY STRIPING FOR CONTRACT KH-1502-000-006 CONSTRUCTION PHASE 5.

① SIGNS TO BE PLACED IN THE MEDIAN AND ON THE OUTSIDE OF SB I-95.
② W20-1(1) TO BE RELOCATED FROM STAGE 2.

ALL SIGNS 48"x 48" UNLESS STATED OTHERWISE

STA.724+50 — W9-3a(4)① ALL LANES THRU 96"x78" — 800' — W6-1(3)① W9-3a(5) LANES DIVIDE 1500 FT — ALL LANES THRU 96"x 18" — 700' — W6-1(3)① W9-3a(5) LANES DIVIDE 1/2 MILE — ALL LANES THRU 96"x 18" — 1,100' — W20-1(1)① ROAD WORK 1 MILE — 2,600' — PVMS①

NOTES:

1. ROAD WORK 1 MILE SIGN TO BE USED ONLY IF I-95 EXPRESS TOLL LANE PROJECT (KH-1502-000-006) HAS COMPLETED CONSTRUCTION AND REMOVED MOT SIGNING.
2. PVMS TO BE LOCATED 1,300 FEET IN ADVANCE OF LANES DIVIDE 1/2 MILE (W6-1(3)) SIGN. SEE DETAIL ON THIS SHEET FOR PVMS MESSAGE DETAILS. SEE TRAFFIC CONTROL GENERAL NOTE 11 FOR PVMS MESSAGE APPROVAL.

PVMS MEASSAGE DETAILS:

PROVIDE THE FOLLOWING MESSAGE FOR TEN (10) DAYS AFTER IMPLEMENTATION OF STAGE 3 TRAFFIC CONTROL SETUP.

SCREEN 1

	L	A	N	E	S	
	D	I	V	I	D	E
3	/	4		M	I	L	E

SCREEN 2

		A	L	L		
	L	A	N	E	S	
		T	H	R	U	

LEGEND

- TEMPORARY CONCRETE TRAFFIC BARRIER FOR MAINTENANCE OF TRAFFIC
- CONSTRUCTION FROM PREVIOUS STAGE
- TEMPORARY SAND FILLED CRASH CUSHION BARRELS
- DRUM PLACEMENT
- TRAFFIC CONTROL SIGN
- PVMS — PORTABLE VARIABLE MESSAGE SIGN
- TEMPORARY STRIPING, TYPE AS NOTED ON PLAN
- PAVEMENT WORK – CURRENT STAGE
- PAVEMENT CONSTRUCTED IN PREVIOUS STAGE

PAVEMENT MARKINGS LEGEND

1. – 5 IN. WHITE REMOVABLE PREFORMED PAVEMENT LINE MARKINGS.
2. – 5 IN. WHITE SKIP REMOVABLE PREFORMED PAVEMENT LINE MARKINGS (10 FT. LINE, 30 FT. GAP).
3. – 5 IN. WHITE SKIP REMOVABLE PREFORMED PAVEMENT LINE MARKINGS (3 FT. LINE, 9 FT. GAP).
4. – 5 IN. YELLOW REMOVABLE PREFORMED PAVEMENT LINE MARKINGS.
5. – 10 IN. WHITE REMOVABLE PREFORMED PAVEMENT LINE MARKINGS.

SCALE IN FEET: 50 0 50 100

STAGE 3

RK&K
81 MOSHER STREET | BALTIMORE, MD 21217
PH: (410) 728-2900 FAX: (410) 728-3160
Engineers Construction Managers Planners Scientists
www.rkk.com

MARYLAND TRANSPORTATION AUTHORITY
Engineering Division

ADDENDUMS & REVISIONS

NO.	DESCRIPTION	BY	DATE

I-95 FROM MORAVIA ROAD TO THE FORT McHENRY TUNNEL - PHASE 1 - SOUTHBOUND
I-95 (BALTIMORE CITY)
TRAFFIC CONTROL PLAN

DESIGNED BY A.J.G. | DRAWN BY R.W.T. | CHECKED BY J.M.R.
CONST. REVIEW BY | DATE DECEMBER 2009 | SCALE AS SHOWN

CONTRACT NO. FT 928-000-006
DRAWING NO. MT-22 OF 27
SHEET NO. 43 OF 188

TO FORT McHENRY TUNNEL

TO WHITE MARSH

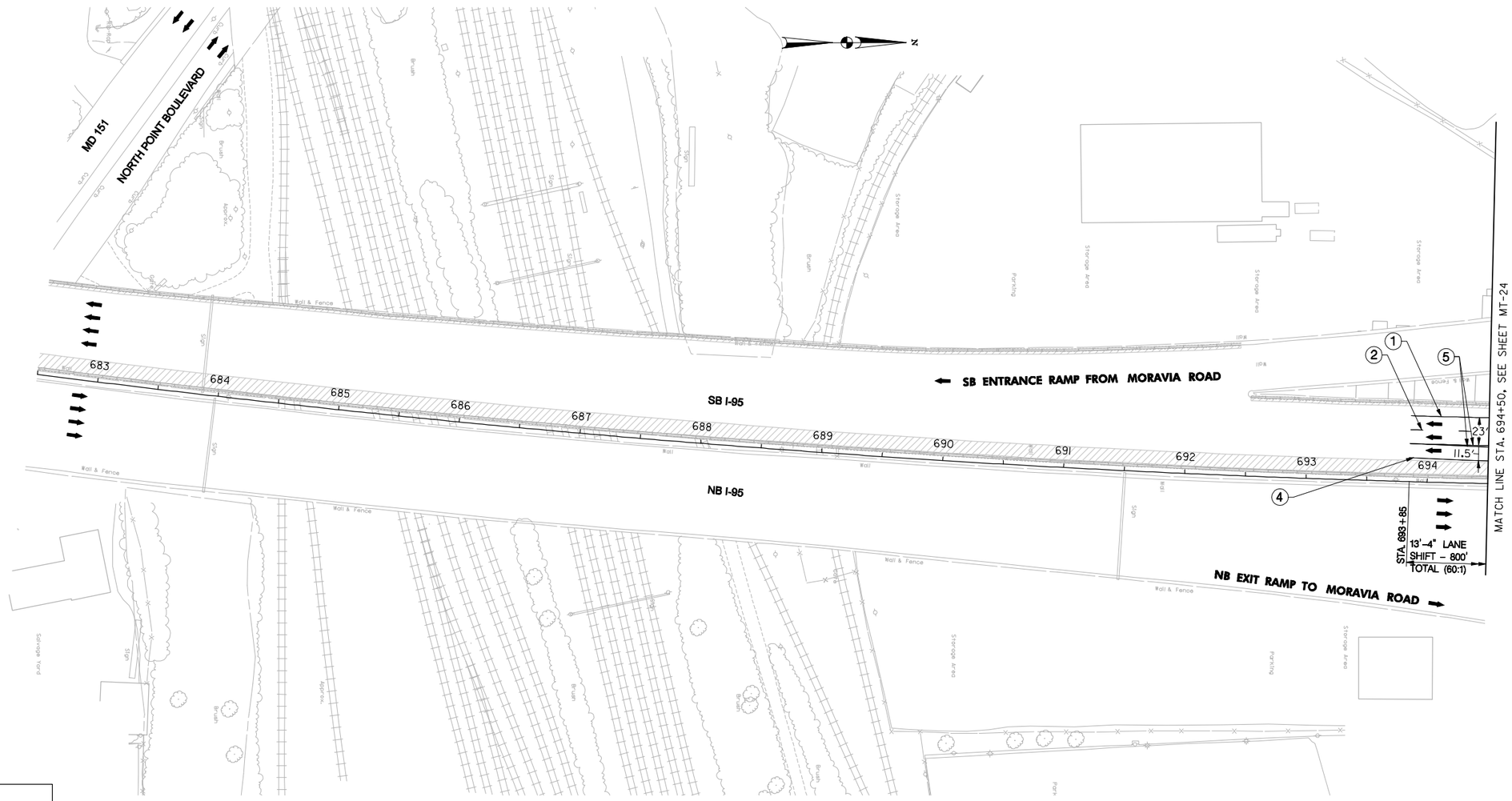

LEGEND

- TEMPORARY CONCRETE TRAFFIC BARRIER FOR MAINTENANCE OF TRAFFIC
- CONSTRUCTION FROM PREVIOUS STAGE
- TEMPORARY SAND FILLED CRASH CUSHION BARRELS
- DRUM PLACEMENT
- TRAFFIC CONTROL SIGN
- PVMS — PORTABLE VARIABLE MESSAGE SIGN
- TEMPORARY STRIPING, TYPE AS NOTED ON PLAN
- PAVEMENT WORK - CURRENT STAGE
- PAVEMENT CONSTRUCTED IN PREVIOUS STAGE

PAVEMENT MARKINGS LEGEND

1. – 5 IN. WHITE REMOVABLE PREFORMED PAVEMENT LINE MARKINGS.
2. – 5 IN. WHITE SKIP REMOVABLE PREFORMED PAVEMENT LINE MARKINGS (10 FT. LINE, 30 FT. GAP).
3. – 5 IN. WHITE SKIP REMOVABLE PREFORMED PAVEMENT LINE MARKINGS (3 FT. LINE, 9 FT. GAP).
4. – 5 IN. YELLOW REMOVABLE PREFORMED PAVEMENT LINE MARKINGS.
5. – 10 IN. WHITE REMOVABLE PREFORMED PAVEMENT LINE MARKINGS.

SCALE IN FEET

50 0 50 100

NOTES:

1. SHOULDER WIDTHS ARE IDENTICAL TO STAGE 3 FROM STA. 693+85 TO STA. 694+50

STAGE 4

RK&K

81 MOSHER STREET | BALTIMORE, MD 21217

PH: (410) 728-2900 FAX: (410) 728-3160

Engineers Construction Managers Planners Scientists

www.rkk.com

MARYLAND TRANSPORTATION AUTHORITY

Engineering Division

ADDENDUMS & REVISIONS

NO.	DESCRIPTION	BY	DATE

I-95 FROM MORAVIA ROAD TO THE FORT McHENRY TUNNEL - PHASE 1 - SOUTHBOUND

I-95 (BALTIMORE CITY)

TRAFFIC CONTROL PLAN

DESIGNED BY A.J.G.	DRAWN BY R.W.T.	CHECKED BY J.M.R.
CONST. REVIEW BY	DATE DECEMBER 2009	SCALE AS SHOWN

CONTRACT NO. FT 928-000-006

DRAWING NO. **MT-23 OF 27**

SHEET NO. 44 OF 188

TO FORT McHENRY TUNNEL

TO WHITE MARSH

QUAD AVENUE

SB ENTRANCE RAMP FROM MORAVIA ROAD

9' LANE SHIFT – 540' TOTAL (60:1)

STA. 696+45

STA. 701+85

W9-3a(1)

90"X 66"

STA. 706+85

SB I-95

NB I-95

50' TYP.

23'

11.5'

695 696 697 698 699 700 701 702 703 704 705 706 707

13'-4" LANE SHIFT– 800' TOTAL (60:1)

MATCH LINE STA. 694+50, SEE SHEET MT-23

MATCH LINE STA. 707+50, SEE SHEET MT-25

NB EXIT RAMP TO MORAVIA ROAD

LEGEND

- TEMPORARY CONCRETE TRAFFIC BARRIER FOR MAINTENANCE OF TRAFFIC
- CONSTRUCTION FROM PREVIOUS STAGE
- TEMPORARY SAND FILLED CRASH CUSHION BARRELS
- DRUM PLACEMENT
- TRAFFIC CONTROL SIGN
- PVMS — PORTABLE VARIABLE MESSAGE SIGN
- TEMPORARY STRIPING, TYPE AS NOTED ON PLAN
- PAVEMENT WORK – CURRENT STAGE
- PAVEMENT CONSTRUCTED IN PREVIOUS STAGE

PAVEMENT MARKINGS LEGEND

1. – 5 IN. WHITE REMOVABLE PREFORMED PAVEMENT LINE MARKINGS.
2. – 5 IN. WHITE SKIP REMOVABLE PREFORMED PAVEMENT LINE MARKINGS (10 FT. LINE, 30 FT. GAP).
3. – 5 IN. WHITE SKIP REMOVABLE PREFORMED PAVEMENT LINE MARKINGS (3 FT. LINE, 9 FT. GAP).
4. – 5 IN. YELLOW REMOVABLE PREFORMED PAVEMENT LINE MARKINGS.
5. – 10 IN. WHITE REMOVABLE PREFORMED PAVEMENT LINE MARKINGS.

SCALE IN FEET

50 0 50 100

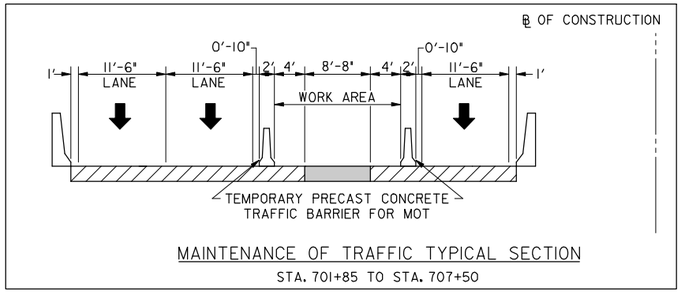

MAINTENANCE OF TRAFFIC TYPICAL SECTION

STA. 701+85 TO STA. 707+50

STAGE 4

RK&K

81 MOSHER STREET | BALTIMORE, MD 21217

PH: (410) 728-2900 FAX: (410) 728-3160

Engineers Construction Managers Planners Scientists

www.rkk.com

MARYLAND TRANSPORTATION AUTHORITY

Engineering Division

ADDENDUMS & REVISIONS

NO.	DESCRIPTION	BY	DATE

I-95 FROM MORAVIA ROAD TO THE FORT McHENRY TUNNEL - PHASE 1 - SOUTHBOUND

I-95 (BALTIMORE CITY)

TRAFFIC CONTROL PLAN

DESIGNED BY A.J.G.	DRAWN BY R.W.T.	CHECKED BY J.M.R.
CONST. REVIEW BY	DATE DECEMBER 2009	SCALE AS SHOWN

CONTRACT NO. FT 928-000-006

DRAWING NO. **MT-24 OF 27**

SHEET NO. 45 OF 188

TO FORT McHENRY TUNNEL

TO WHITE MARSH

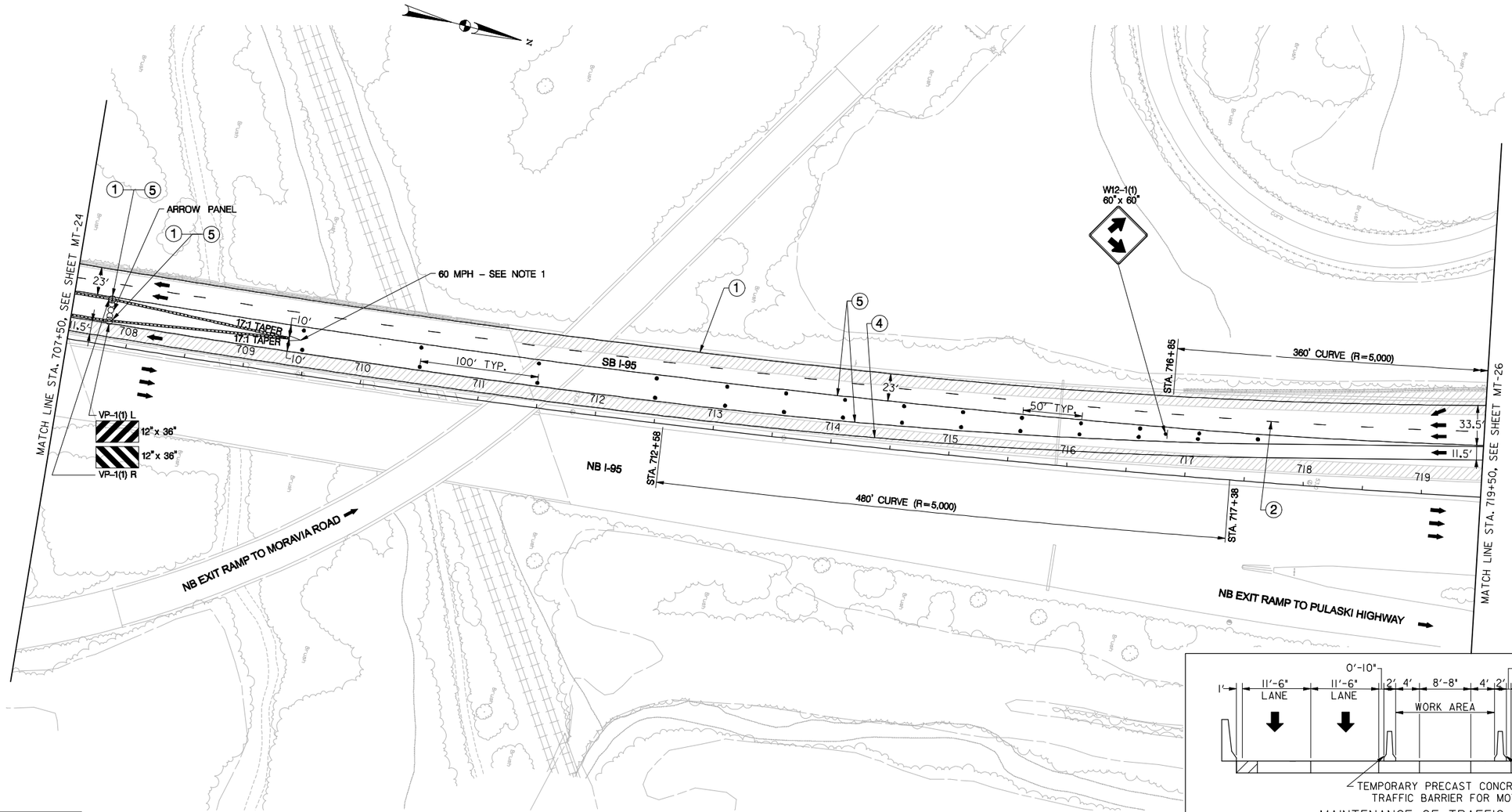

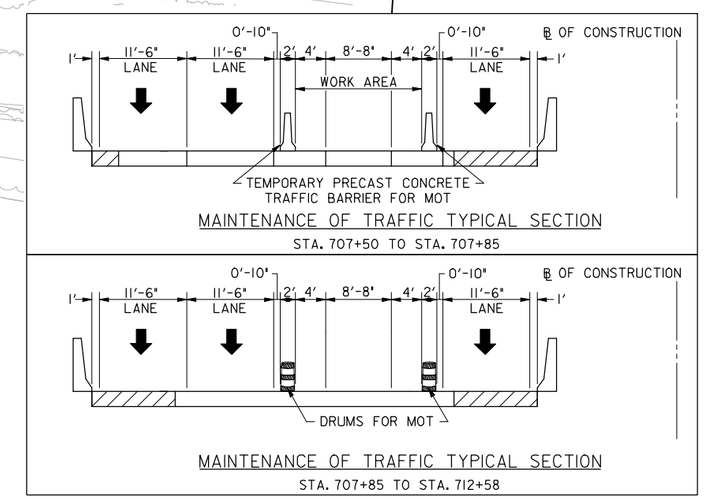

LEGEND

- TEMPORARY CONCRETE TRAFFIC BARRIER FOR MAINTENANCE OF TRAFFIC
- CONSTRUCTION FROM PREVIOUS STAGE
- TEMPORARY SAND FILLED CRASH CUSHION BARRELS
- DRUM PLACEMENT
- TRAFFIC CONTROL SIGN
- PVMS — PORTABLE VARIABLE MESSAGE SIGN
- TEMPORARY STRIPING, TYPE AS NOTED ON PLAN
- PAVEMENT WORK – CURRENT STAGE
- PAVEMENT CONSTRUCTED IN PREVIOUS STAGE

PAVEMENT MARKINGS LEGEND

1. – 5 IN. WHITE REMOVABLE PREFORMED PAVEMENT LINE MARKINGS.
2. – 5 IN. WHITE SKIP REMOVABLE PREFORMED PAVEMENT LINE MARKINGS (10 FT. LINE, 30 FT. GAP).
3. – 5 IN. WHITE SKIP REMOVABLE PREFORMED PAVEMENT LINE MARKINGS (3 FT. LINE, 9 FT. GAP).
4. – 5 IN. YELLOW REMOVABLE PREFORMED PAVEMENT LINE MARKINGS.
5. – 10 IN. WHITE REMOVABLE PREFORMED PAVEMENT LINE MARKINGS.

NOTES:

1. PLACE OM-3(3) SIGN APPROACH END OF LEADING TEMPORARY SAND FILLED CRASH CUSHION BARREL.

SCALE IN FEET

50 0 50 100

STAGE 4

RK&K

81 MOSHER STREET | BALTIMORE, MD 21217

PH: (410) 728-2900 FAX: (410) 728-5160

Engineers Construction Managers Planners Scientists

www.rkk.com

MARYLAND TRANSPORTATION AUTHORITY

Engineering Division

ADDENDUMS & REVISIONS

NO.	DESCRIPTION	BY	DATE

I-95 FROM MORAVIA ROAD TO THE FORT McHENRY TUNNEL - PHASE 1 - SOUTHBOUND

I-95 (BALTIMORE CITY)

TRAFFIC CONTROL PLAN

DESIGNED BY A.J.G. | DRAWN BY R.W.T. | CHECKED BY J.M.R.

CONST. REVIEW BY | DATE DECEMBER 2009 | SCALE AS SHOWN

CONTRACT NO. FT 928-000-006

DRAWING NO. **MT-25 OF 27**

SHEET NO. 46 OF 188

TO FORT McHENRY TUNNEL

TO WHITE MARSH

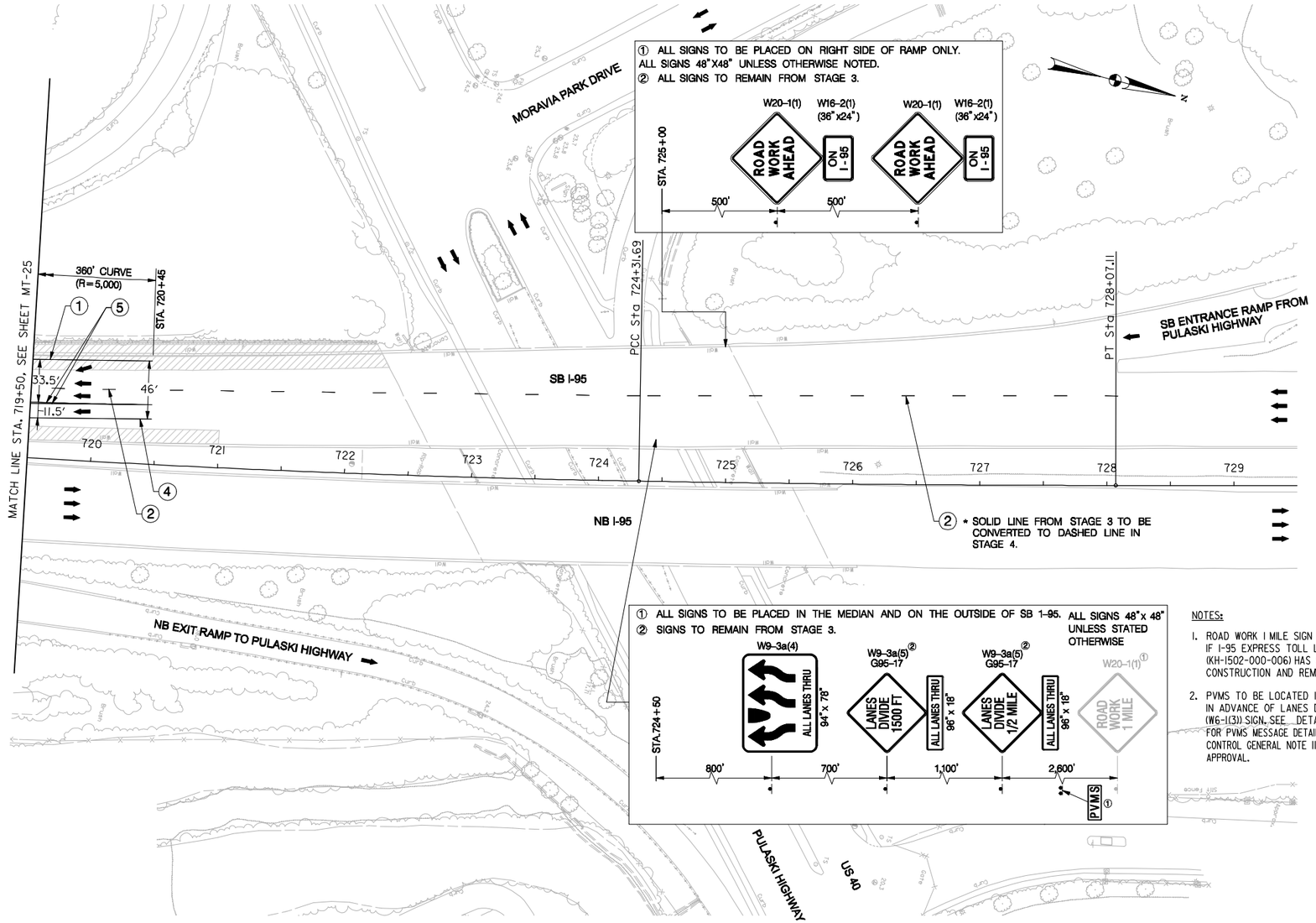

① ALL SIGNS TO BE PLACED ON RIGHT SIDE OF RAMP ONLY. ALL SIGNS 48"X48" UNLESS OTHERWISE NOTED.
② ALL SIGNS TO REMAIN FROM STAGE 3.

① ALL SIGNS TO BE PLACED IN THE MEDIAN AND ON THE OUTSIDE OF SB I-95. ALL SIGNS 48"x 48" UNLESS STATED OTHERWISE
② SIGNS TO REMAIN FROM STAGE 3.

NOTES:

1. ROAD WORK 1 MILE SIGN TO BE USED ONLY IF I-95 EXPRESS TOLL LANE PROJECT (KH-1502-000-006) HAS COMPLETED CONSTRUCTION AND REMOVED MOT SIGNING.
2. PVMS TO BE LOCATED 1,300 FEET IN ADVANCE OF LANES DIVIDE 1/2 MILE (W6-1(3)) SIGN. SEE DETAIL ON THIS SHEET FOR PVMS MESSAGE DETAILS. SEE TRAFFIC CONTROL GENERAL NOTE 11 FOR PVMS MESSAGE APPROVAL.

PVMS MEASSAGE DETAILS:

PROVIDE THE FOLLOWING MESSAGE FOR TEN (10) DAYS AFTER IMPLEMENTATION OF STAGE 4 TRAFFIC CONTROL SETUP.

SCREEN 1

	L	A	N	E	S	
	D	I	V	I	D	E
3	/	4		M	I	L	E

SCREEN 2

		A	L	L		
	L	A	N	E	S	
		T	H	R	U	

LEGEND

- TEMPORARY CONCRETE TRAFFIC BARRIER FOR MAINTENANCE OF TRAFFIC
- CONSTRUCTION FROM PREVIOUS STAGE
- TEMPORARY SAND FILLED CRASH CUSHION BARRELS
- DRUM PLACEMENT
- TRAFFIC CONTROL SIGN
- PVMS — PORTABLE VARIABLE MESSAGE SIGN
- TEMPORARY STRIPING, TYPE AS NOTED ON PLAN
- PAVEMENT WORK – CURRENT STAGE
- PAVEMENT CONSTRUCTED IN PREVIOUS STAGE

PAVEMENT MARKINGS LEGEND

1 – 5 IN. WHITE REMOVABLE PREFORMED PAVEMENT LINE MARKINGS.
2 – 5 IN. WHITE SKIP REMOVABLE PREFORMED PAVEMENT LINE MARKINGS (10 FT. LINE, 30 FT. GAP).
3 – 5 IN. WHITE SKIP REMOVABLE PREFORMED PAVEMENT LINE MARKINGS (3 FT. LINE, 9 FT. GAP).
4 – 5 IN. YELLOW REMOVABLE PREFORMED PAVEMENT LINE MARKINGS.
5 – 10 IN. WHITE REMOVABLE PREFORMED PAVEMENT LINE MARKINGS.

SCALE IN FEET
50 0 50 100

STAGE 4

RK&K
81 MOSHER STREET | BALTIMORE, MD 21217
PH: (410) 728-2900 FAX: (410) 728-3160
Engineers Construction Managers Planners Scientists
www.rkk.com

MARYLAND TRANSPORTATION AUTHORITY
Engineering Division

ADDENDUMS & REVISIONS

NO.	DESCRIPTION	BY	DATE

I-95 FROM MORAVIA ROAD TO THE FORT McHENRY TUNNEL - PHASE 1 - SOUTHBOUND

I-95 (BALTIMORE CITY)

TRAFFIC CONTROL PLAN

DESIGNED BY A.J.G.	DRAWN BY R.W.T.	CHECKED BY J.M.R.
CONST. REVIEW BY	DATE DECEMBER 2009	SCALE AS SHOWN

CONTRACT NO. FT 928-000-006

DRAWING NO. **MT-26 OF 27**

SHEET NO. 47 OF 188

LEGEND

- DETOUR PATH
- TEMPORARY TRAFFIC CONTROL SIGN AND SUPPORT
- PORTABLE VARIABLE MESSAGE SIGN (PVMS)
- TYPE III BARRICADE
- M1-1 36"x36"
- M3-3 30"x15"
- M4-8 30"x15"
- M4-8A 18"x24"
- R11-2 48"x30"
- W20-2(1) 48"x48"
- M6-1 21"x15"
- M5-1 21"x15"
- M6-3 21"x15"

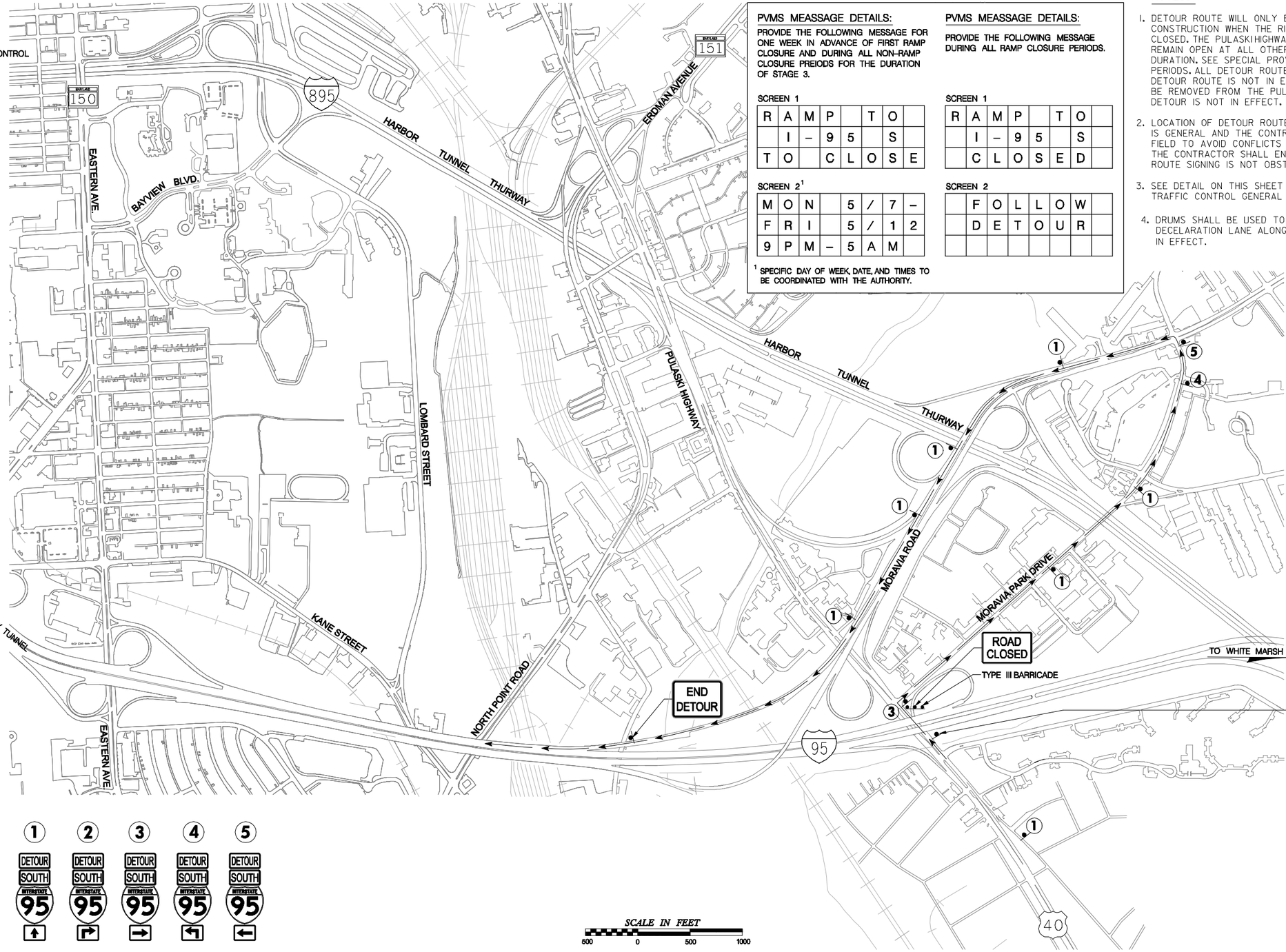

PVMS MEASSAGE DETAILS:

PROVIDE THE FOLLOWING MESSAGE FOR ONE WEEK IN ADVANCE OF FIRST RAMP CLOSURE AND DURING ALL NON-RAMP CLOSURE PREIODS FOR THE DURATION OF STAGE 3.

SCREEN 1

R	A	M	P		T	O	
	I	–	9	5		S	
T	O		C	L	O	S	E

SCREEN 2[1]

M	O	N		5	/	7	–
F	R	I		5	/	1	2
9	P	M	–	5	A	M	

[1] SPECIFIC DAY OF WEEK, DATE, AND TIMES TO BE COORDINATED WITH THE AUTHORITY.

PVMS MEASSAGE DETAILS:

PROVIDE THE FOLLOWING MESSAGE DURING ALL RAMP CLOSURE PERIODS.

SCREEN 1

R	A	M	P		T	O	
	I	–	9	5		S	
	C	L	O	S	E	D	

SCREEN 2

	F	O	L	L	O	W	
	D	E	T	O	U	R	

NOTES:

1. DETOUR ROUTE WILL ONLY BE IN OPERATION DURING STAGE 3 CONSTRUCTION WHEN THE RIGHTMOST MAINLINE LANE ON SB I-95 IS CLOSED. THE PULASKI HIGHWAY ENTRANCE RAMP TO SB I-95 WILL REMAIN OPEN AT ALL OTHER TIMES THROUGHOUT THE PROJECT DURATION. SEE SPECIAL PROVISIONS FOR ALLOWABLE CLOSURE PERIODS. ALL DETOUR ROUTE SIGNS SHALL BE COVERED WHEN THE DETOUR ROUTE IS NOT IN EFFECT. THE TYPE III BARRICADE SHALL BE REMOVED FROM THE PULASKI HIGHWAY ENTRANCE RAMP WHEN THE DETOUR IS NOT IN EFFECT.
2. LOCATION OF DETOUR ROUTE SIGNING SHOWN ON THE PLAN IS GENERAL AND THE CONTRACTOR SHALL LOCATE SIGNING IN THE FIELD TO AVOID CONFLICTS WITH EXISTING ROADSIDE FEATURES. THE CONTRACTOR SHALL ENSURE THAT MOTORIST'S VIEW OF DETOUR ROUTE SIGNING IS NOT OBSTRUCTED BY OTHER ROADSIDE FEATURES.
3. SEE DETAIL ON THIS SHEET FOR PVMS MESSAGE DETAILS. SEE TRAFFIC CONTROL GENERAL NOTE 11 FOR PVMS MESSAGE APPROVAL.
4. DRUMS SHALL BE USED TO RESTRICT ACCESS TO THE RAMP DECELARATION LANE ALONG WB US 40 WHEN THE DETOUR IS IN EFFECT.

SIGNS TO BE PLACED ON US 40 / PULASKI HIGHWAY (RIGHT SIDE OF ROAD)

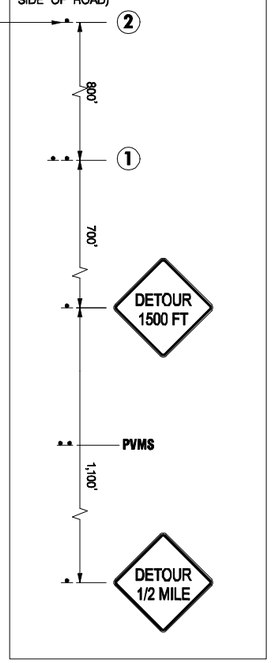

RK&K
81 MOSHER STREET | BALTIMORE, MD 21217
PH: (410) 728-2900 FAX: (410) 728-3160
Engineers Construction Managers Planners Scientists
www.rkk.com

MARYLAND TRANSPORTATION AUTHORITY
Engineering Division

ADDENDUMS & REVISIONS

NO.	DESCRIPTION	BY	DATE

I-95 FROM MORAVIA ROAD TO THE FORT McHENRY TUNNEL - PHASE 1 - SOUTHBOUND

I-95 (BALTIMORE CITY)

STAGE 3 DETOUR PLAN (WORK HOURS ONLY)

DESIGNED BY J.M.R.	DRAWN BY R.W.T.	CHECKED BY K.B.K.
CONST. REVIEW BY	DATE DECEMBER 2009	SCALE AS SHOWN

CONTRACT NO. FT 928-000-006

DRAWING NO. MT-27 of 27

SHEET NO. 48 OF 188

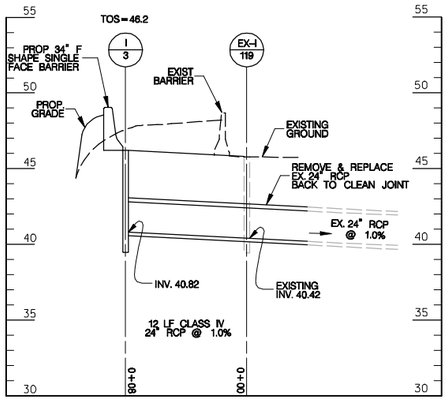

PROPOSED INLET 3 TO EXISTING INLET 119

SCALE: HORZ. 1" = 5' VERT. 1" = 5'
I-95 SB STA. 721+74 to STA. 721+77

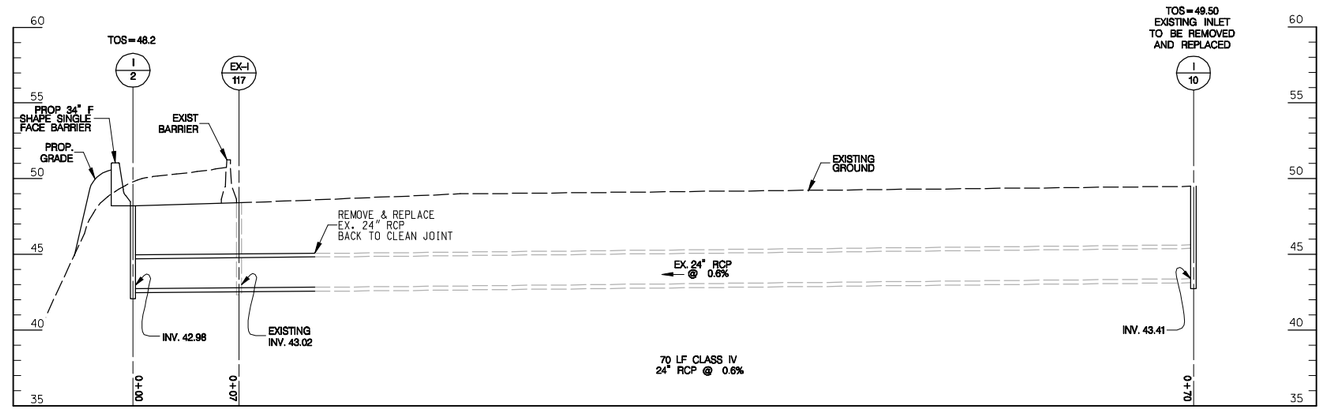

PROPOSED INLET 2 TO PROPOSED INLET 10

SCALE: HORZ. 1" = 5' VERT. 1" = 5'
I-95 SB STA. 718+89 to STA. 718+92

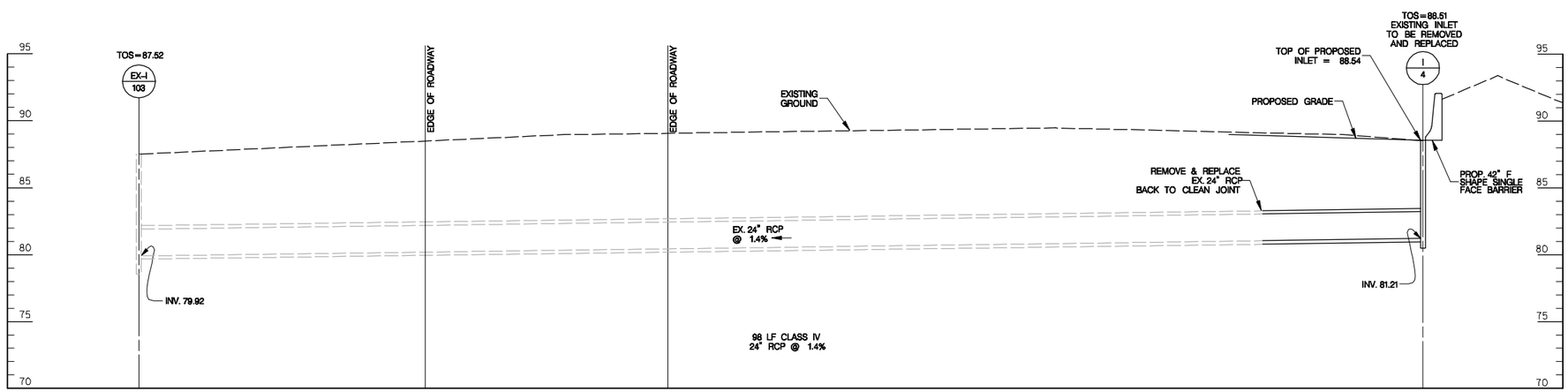

PROPOSED INLET 4 TO EXISTING INLET 103

SCALE: HORZ. 1" = 5' VERT. 1" = 5'
I-95 SB STA. 661+70 to STA. 661+38

RK&K
81 MOSHER STREET | BALTIMORE, MD 21217
PH: (410) 728-2900 FAX: (410) 728-3160
Engineers Construction Managers Planners Scientists
www.rkk.com

PHOENIX ENGINEERING, INC.
CONSULTING ENGINEERS
1420-A Joh Avenue
BALTIMORE, MARYLAND 21227
(410) 247-8833 FAX 247-9397

MARYLAND TRANSPORTATION AUTHORITY
Engineering Division

ADDENDUMS & REVISIONS

NO.	DESCRIPTION	BY	DATE

I-95 FROM MORAVIA ROAD TO THE FORT McHENRY TUNNEL - PHASE 1 - SOUTHBOUND

I-95 (BALTIMORE CITY)

DRAINAGE PROFILE

DESIGNED BY DRB	DRAWN BY VMS	CHECKED BY DRB
CONST. REVIEW BY -	DATE DECEMBER 2009	SCALE AS SHOWN

CONTRACT NO. FT 928-000-006

DRAWING NO. **PP-1 of 3**

SHEET NO. 49 OF 188

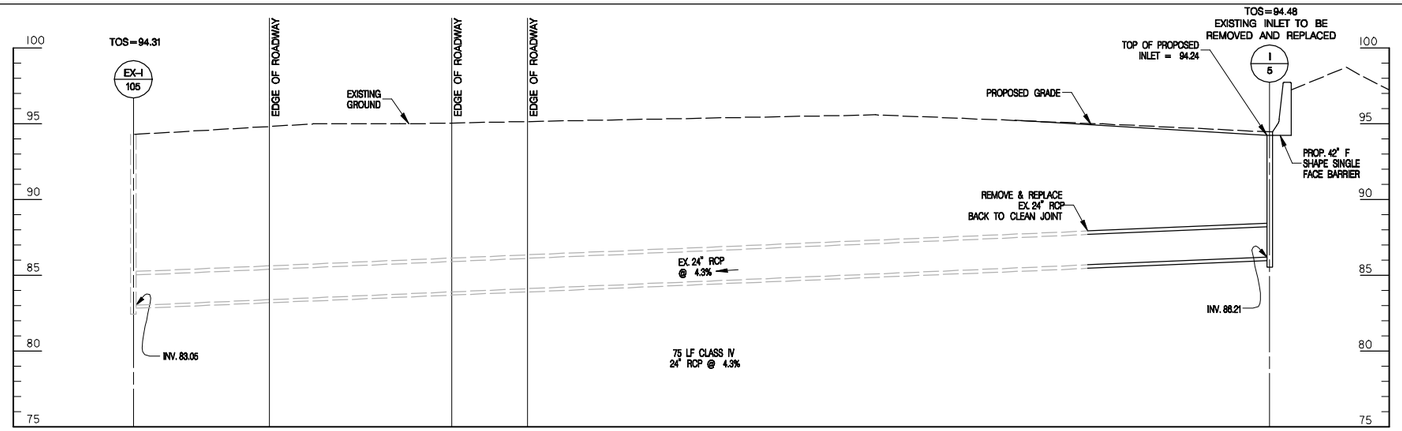

PROPOSED INLET 5 TO EXISTING INLET 105
SCALE: HORZ. 1" = 5' VERT. 1" = 5'
I-95 SB STA. 664+20 to STA. 664+20

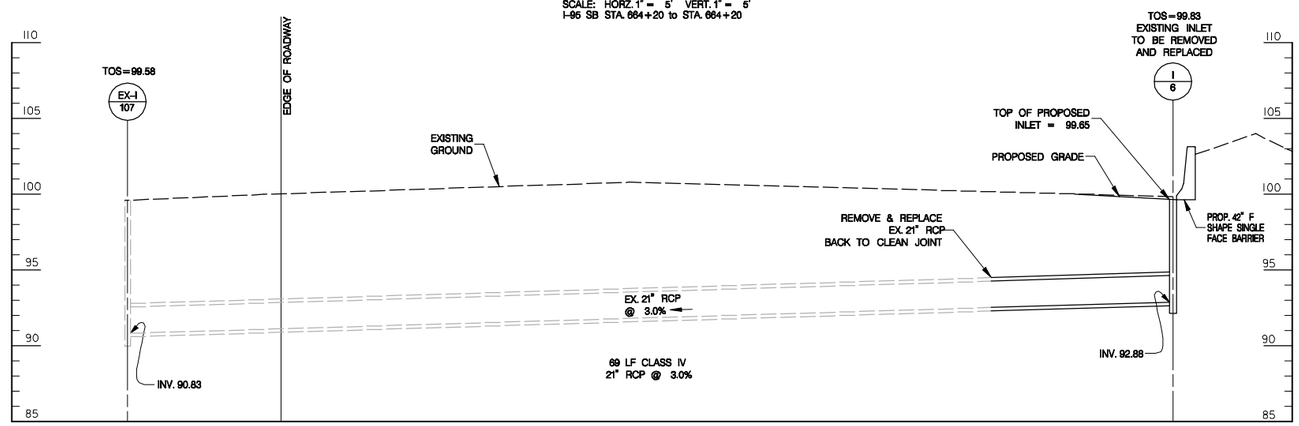

PROPOSED INLET 6 TO EXISTING INLET 107
SCALE: HORZ. 1" = 5' VERT. 1" = 5'
I-95 SB STA. 666+70 to STA. 666+70

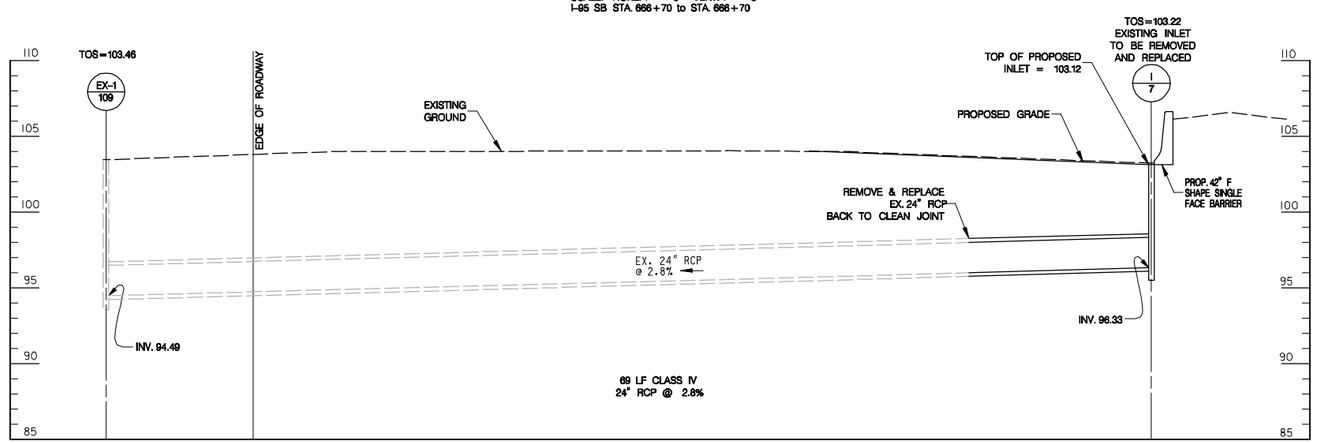

PROPOSED INLET 7 TO EXISTING INLET 109
SCALE: HORZ. 1" = 5' VERT. 1" = 5'
I-95 SB STA. 669+00 to STA. 669+00

RK&K
81 MOSHER STREET | BALTIMORE, MD 21217
PH: (410) 728-2900 FAX: (410) 728-3160
Engineers Construction Managers Planners Scientists
www.rkk.com

PHOENIX ENGINEERING, INC.
CONSULTING ENGINEERS
1420-A Joh Avenue
BALTIMORE, MARYLAND 21227
(410) 247-8633 FAX 247-9397

MARYLAND TRANSPORTATION AUTHORITY
Engineering Division

ADDENDUMS & REVISIONS

NO.	DESCRIPTION	BY	DATE

I-95 FROM MORAVIA ROAD TO THE FORT McHENRY TUNNEL - PHASE 1 - SOUTHBOUND

I-95 (BALTIMORE CITY)

DRAINAGE PROFILE

DESIGNED BY DRB	DRAWN BY VMS	CHECKED BY DRB
CONST. REVIEW BY -	DATE DECEMBER 2009	SCALE AS SHOWN

CONTRACT NO. FT 928-000-006

DRAWING NO. **PP-2 of 3**

SHEET NO. 50 OF 188

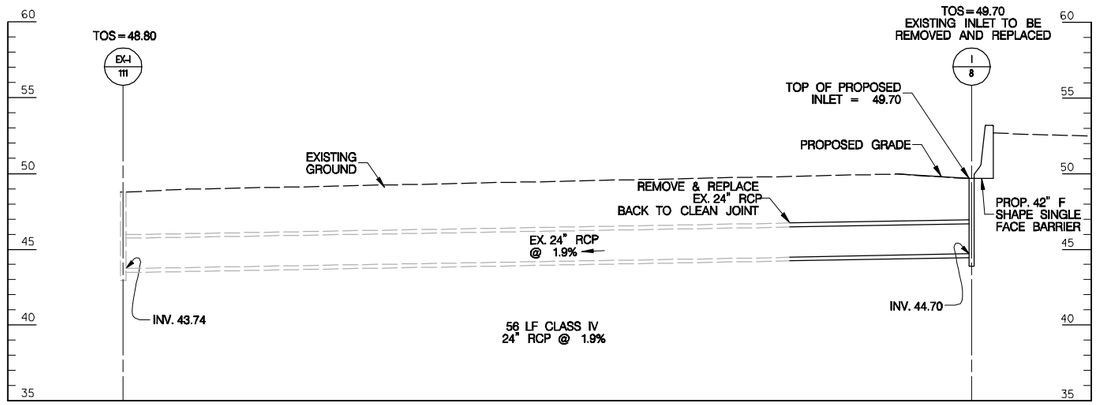

PROPOSED INLET 8 TO EXISTING INLET 111
SCALE: HORZ. 1" = 5' VERT. 1" = 5'
I-95 SB STA. 702+95 to STA. 702+95

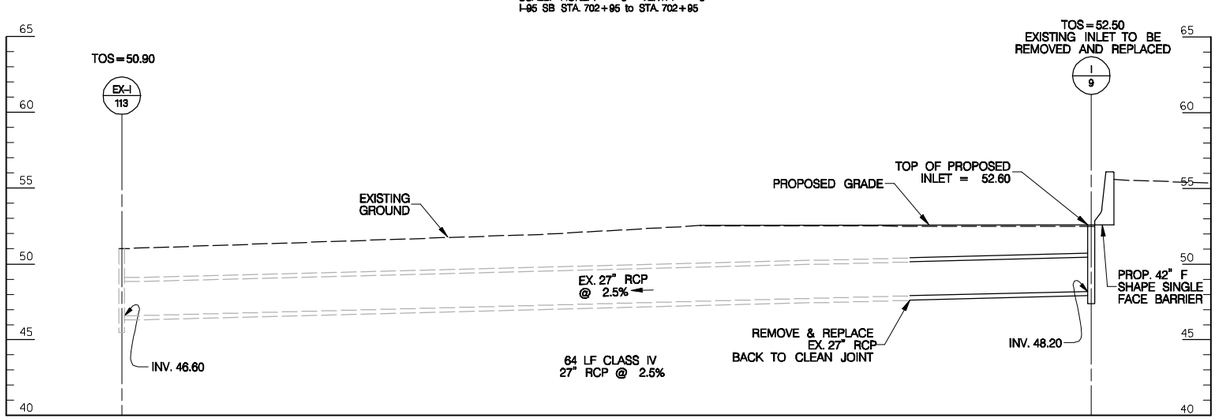

PROPOSED INLET 9 TO EXISTING INLET 113
SCALE: HORZ. 1" = 5' VERT. 1" = 5'
I-95 SB STA. 707+13 to STA. 706+83

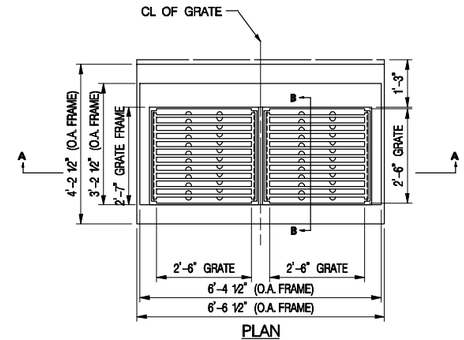

PLAN

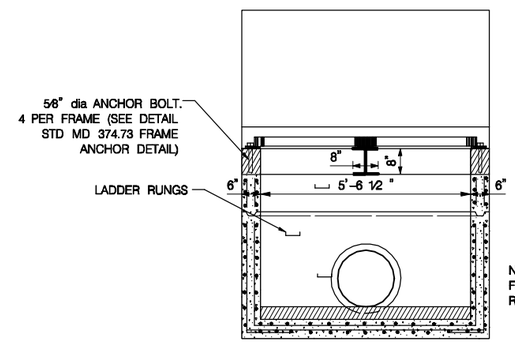

SECTION A–A
MODIFIED S INLET (MD 374.71)

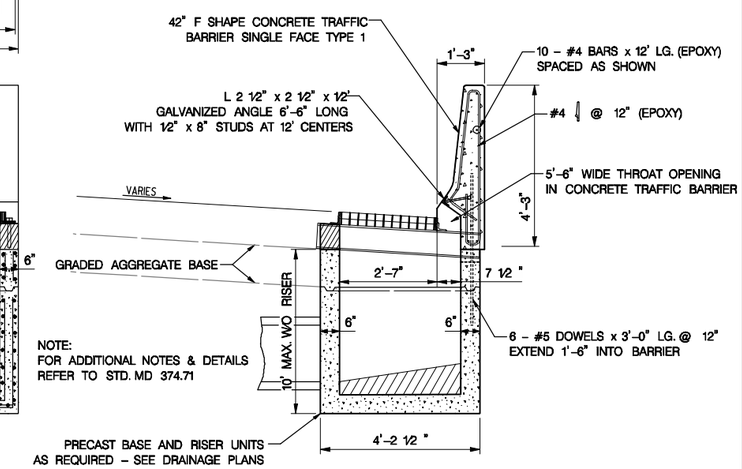

SECTION B–B
MODIFIED S INLET (MD 374.71)

MODIFIED TYPE "S–1" COMBINATION INLET
DOUBLE GRATE TANDEM
SCALE: 1/2" = 1'-0"

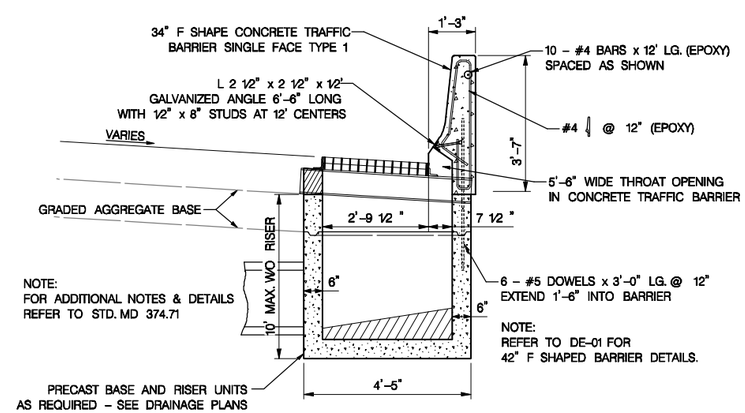

TYPE "S–1" COMBINATION INLET
DOUBLE GRATE TANDEM
SCALE: 1/2" = 1'-0"

RK&K
81 MOSHER STREET | BALTIMORE, MD 21217
PH: (410) 728-2900 FAX: (410) 728-3160
Engineers Construction Managers Planners Scientists
www.rkk.com

PHOENIX ENGINEERING, INC.
CONSULTING ENGINEERS
1420-A Joh Avenue
BALTIMORE, MARYLAND 21227
(410) 247-8633 FAX 247-9397

MARYLAND TRANSPORTATION AUTHORITY
Engineering Division

ADDENDUMS & REVISIONS			
NO.	DESCRIPTION	BY	DATE

I-95 FROM MORAVIA ROAD TO THE FORT McHENRY TUNNEL - PHASE 1 - SOUTHBOUND
I-95 (BALTIMORE CITY)
DRAINAGE PROFILE AND DETAILS

DESIGNED BY DRB	DRAWN BY VMS	CHECKED BY DRB
CONST. REVIEW BY -	DATE DECEMBER 2009	SCALE AS SHOWN

CONTRACT NO. FT 928-000-006
DRAWING NO. **PP–3 of 3**
SHEET NO. 51 OF 188

STORMWATER MANAGEMENT "AS-BUILT" CERTIFICATION

I HEREBY CERTIFY THAT THE STORMWATER MANAGEMENT FACILITY SHOWN ON THE PLANS AND INDIVIDUALLY IDENTIFIED BELOW HAS BEEN CONSTRUCTED IN ACCORDANCE WITH THE PLANS INCLUDED UNDER THE MD DEPARTMENT OF THE ENVIRONMENT APPROVAL, NUMBER 09 – SF – 0237, EXCEPT AS NOTED IN RED ON THE "AS-BUILT" DRAWINGS. FURTHERMORE, THE RED-NOTED EXCEPTIONS DO NOT ADVERSELY AFFECT THE INTENDED PERFORMANCE OF THE FACILITY.

BIO RETENTION FACILITY (BMP NO. FT0004)

FACILITY IDENTIFICATION (IDENTIFY EACH FACILITY INDIVIDUALLY)

NAME (PRINTED) SIGNATURE

MD REGISTRATION NUMBER DATE

"CERTIFY" MEANS TO STATE OR DECLARE A PROFESSIONAL OPINION BASED ON SUFFICIENT AND APPROPRIATE ONSITE INSPECTIONS AND MATERIAL TESTS CONDUCTED DURING CONSTRUCTION

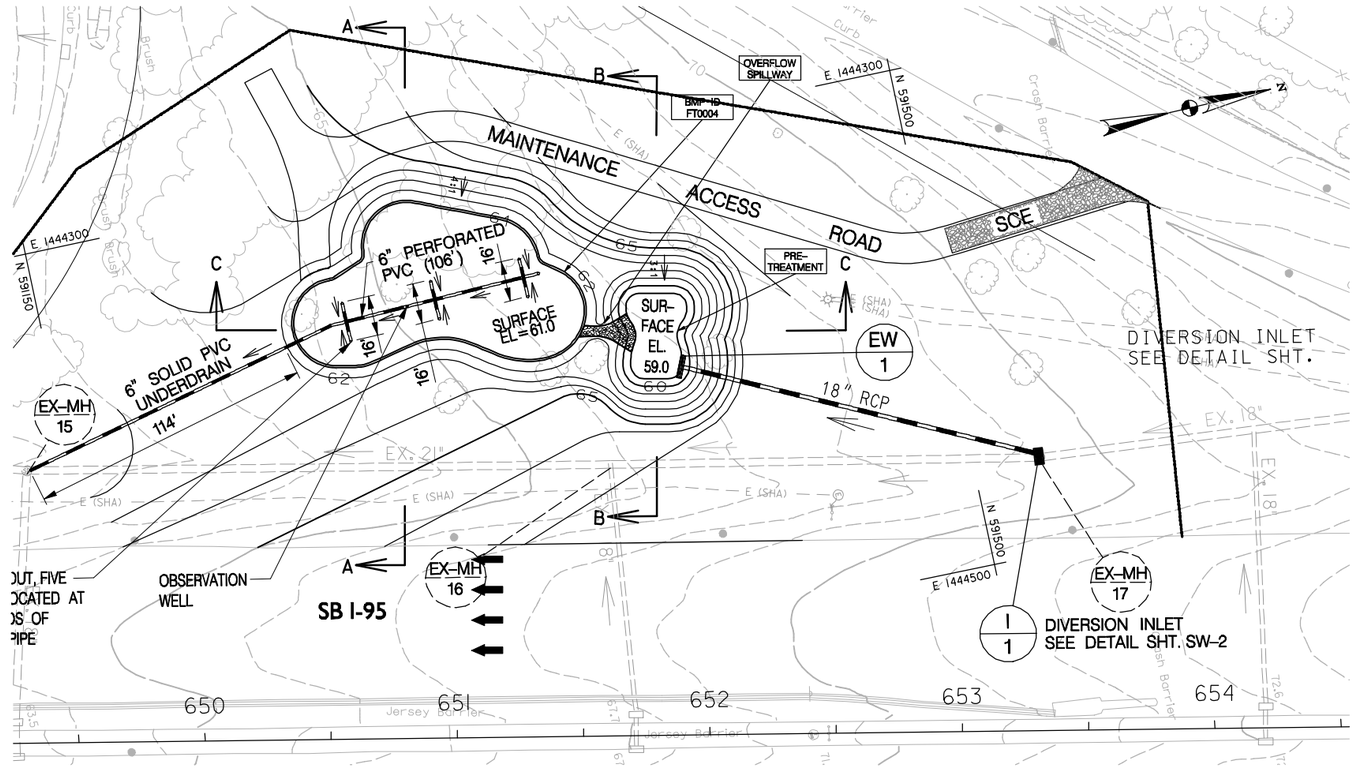

PLAN – BIORETENTION FACILITY FOR STORM WATER QUALITY MANAGEMENT

SCALE: 1" = 30'

I-95 MORAVIA ROAD
PROJECT NAME: TO FMT MDE NO: 09-SF-0237

AS-BUILT DATA FOR FILTERS (BIORETENTION – BMP NO. FT0004) * TO BE COMPLETED BY THE CERTIFYING ENGINEER		
TYPE OF FACILITY	DESIGN	* AS-BUILT
FILTER BED AREA (LxW)	5,294 SF	
FILTER BED SURFACE EL.	61.0	
FILTER INLET PIPE SIZE / EL.	18" / 59.00	
UNDERDRAIN SIZE / EL.	6" / 55.90	

DATE AS-BUILT ACCEPTED BY MDE:

I-95 MORAVIA ROAD
PROJECT NAME: TO FMT MDE NO: 09-SF-0237

AS-BUILT DATA FOR FLOW SPLITTERS * TO BE COMPLETED BY THE CERTIFYING ENGINEER		
	DESIGN	* AS-BUILT
WQ DIVERSION OPENING SIZE / EL.	18" / 60.48	
BYPASS WEIR LENGTH / EL.	N/A	
BYPASS OPENING SIZE / EL.	21" / 62.00	

DATE AS-BUILT ACCEPTED BY MDE:

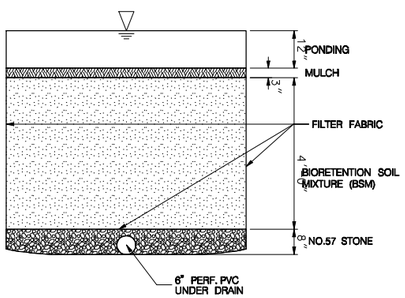

TYPICAL SECTION

SCALE: 1" = 2'

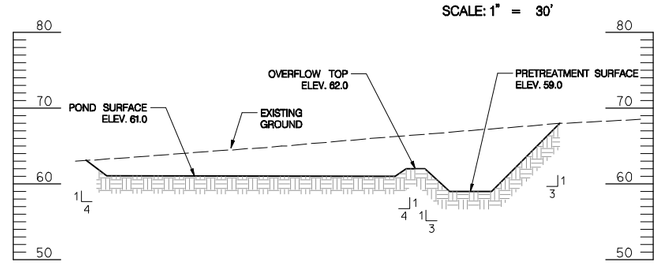

SECTION (C–C) – OVERFLOW SPILLWAY

SCALE: HORZ. 1" = 30' – VERT. 1" = 10'

PIPE SCHEDULE

FROM	TO	SIZE (IN.)	TYPE	LENGTH (L.F.)	INV. IN	INV. OUT
650+34 LT 156'	651+35 LT 184'	6	PERF. PVC	106	56.05	55.52
650+56 LT 173'	650+60 LT 158'	6	PERF. PVC	16	55.69	55.65
650+91 LT 182'	650+95 LT 166'	6	PERF. PVC	16	55.86	55.82
651+27 LT 190'	651+30 LT 175'	6	PERF. PVC	16	56.04	56.00
649+32 LT 108'	650+34 LT 155'	6	PVC	114	55.52	54.95

NOTES:
1. SEE ASTMF 758 (SLOTTED) OR TYPE PS 28 OR AASHTO-M-278 (PERFORATED).
2. IF PERFORATED, PERFORATIONS SHALL BE 36" DIA. LOCATED 6" ON CENTER WITH A MINIMUM OF 4 HOLES PER ROW.
3. PIPE SHALL BE WRAPPED WITH A 14" (No.4 or 4x4) GALVANIZED HARDWARE CLOTH.
4. A RIGID NON-PERFORATED OBSERVATION WELL MUST BE PROVIDED (1 PER 1,000 SF) TO PROVIDE A CLEAN-OUT PORT AND MONITOR FILTER.

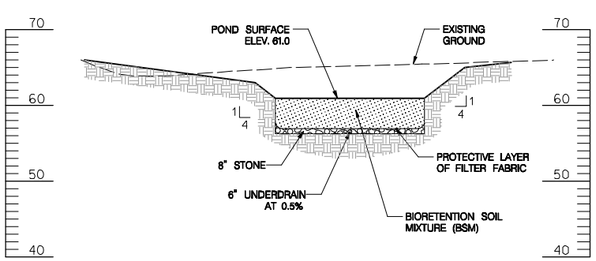

SECTION (A–A) – BIORETENTION FACILITY

SCALE: HORZ. 1" = 30' – VERT. 1" = 10'

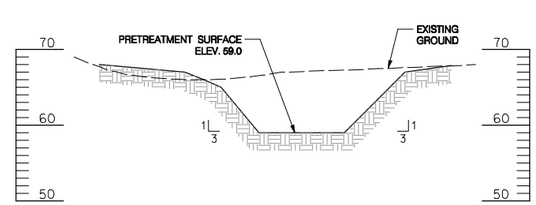

SECTION (B–B)– PRETREATMENT FACILITY

SCALE: HORZ. 1" = 30' – VERT. 1" = 10'

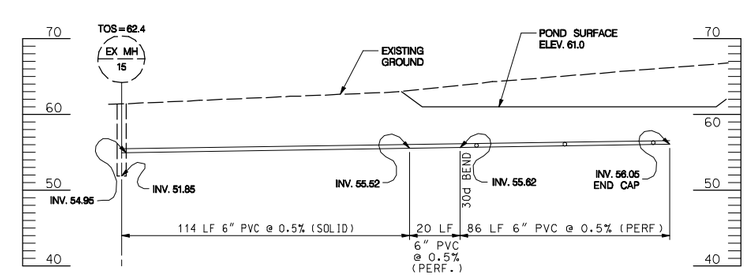

PROFILE – 6" PVC UNDERDRAIN

SCALE: HORZ. 1" = 30' – VERT. 1" = 10'

RK&K
81 MOSHER STREET | BALTIMORE, MD 21217
PH: (410) 728-2900 FAX: (410) 728-3160
Engineers Construction Managers Planners Scientists
www.rkk.com

PHOENIX ENGINEERING, INC.
CONSULTING ENGINEERS
1420-A Joh Avenue
BALTIMORE, MARYLAND 21227
(410) 247-8633 FAX 247-9397

MARYLAND TRANSPORTATION AUTHORITY
Engineering Division

ADDENDUMS & REVISIONS

NO.	DESCRIPTION	BY	DATE

I-95 FROM MORAVIA ROAD TO THE FORT McHENRY TUNNEL - PHASE 1 - SOUTHBOUND

I-95 (BALTIMORE CITY)

BIORETENTION FACILITY - BMP NO. FT0004

CONTRACT NO. FT 928-000-006

DRAWING NO. SW-1 of 5

DESIGNED BY DRB DRAWN BY VMS CHECKED BY DRB

CONST. REVIEW BY - DATE DECEMBER 2009 SCALE AS SHOWN

SHEET NO. 52 OF 188

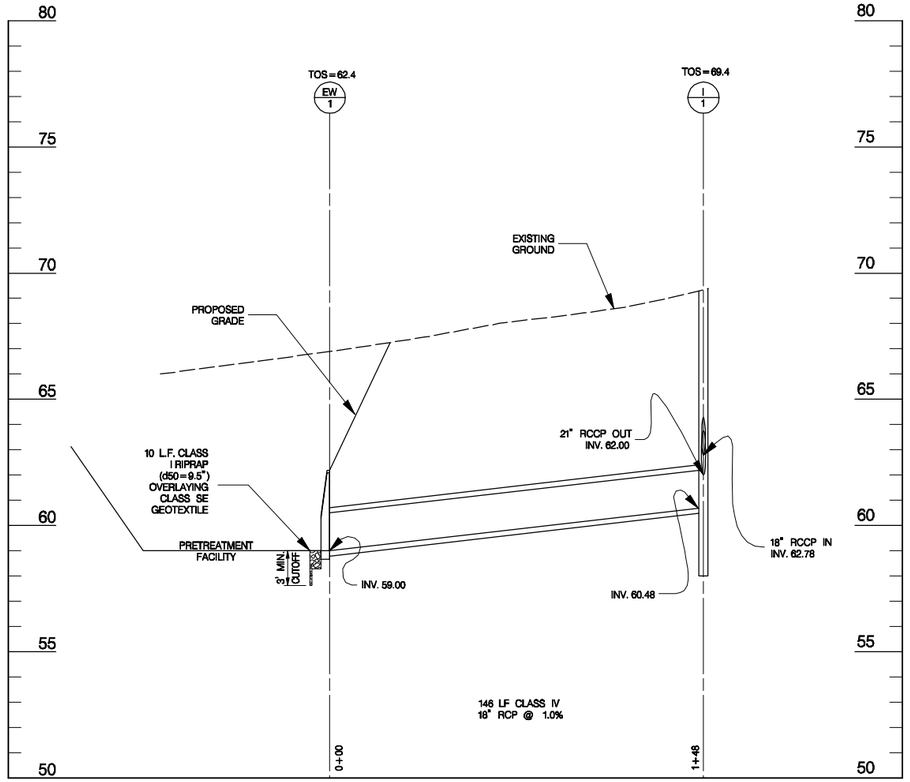

PROFILE – PROPOSED DIVERSION INLET 1 TO PROPOSED ENDWALL 1

SCALE: HORZ. 1" = 30' VERT. 1" = 3'

I-95 SB STA. 653+32 to STA. 651+90

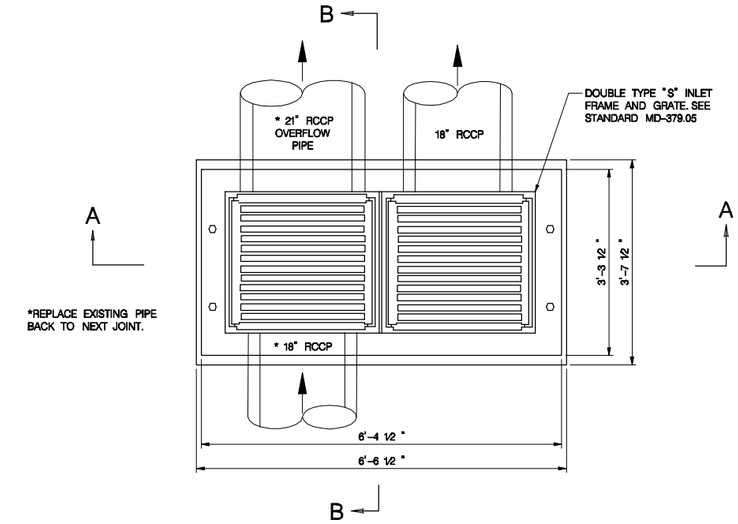

PLAN

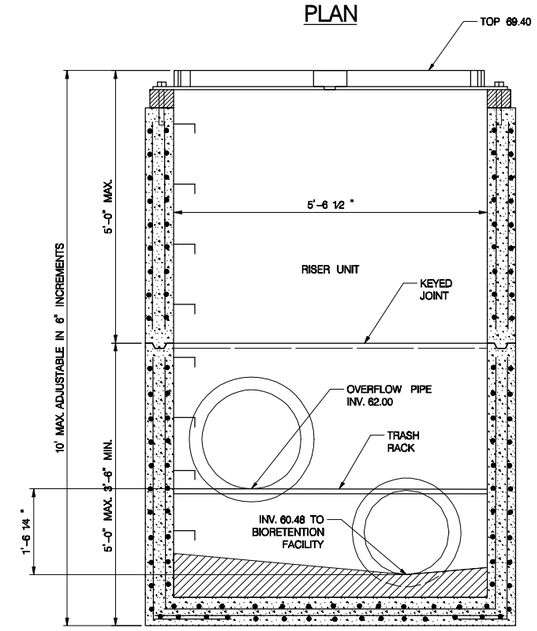

SECTION A-A

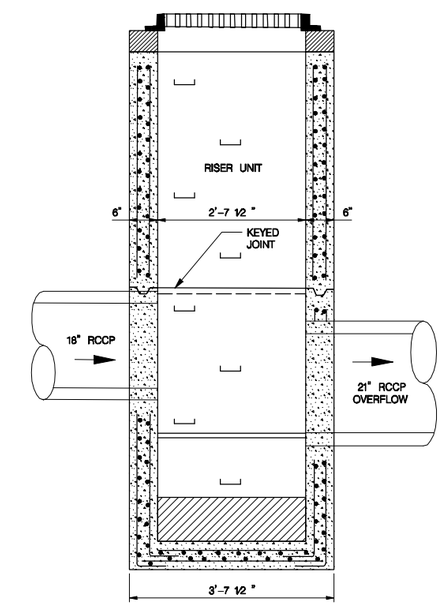

SECTION B-B

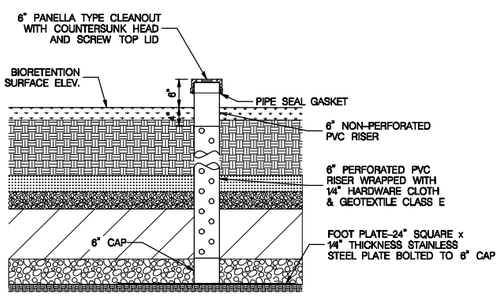

OBSERVATION WELL DETAIL

NOT TO SCALE

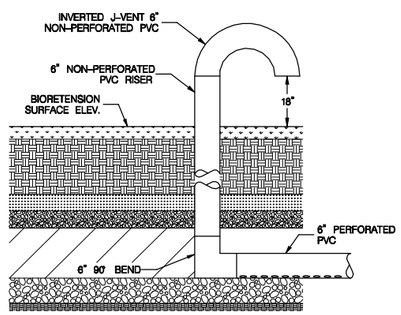

INVERTED J-VENT DETAIL

NOT TO SCALE

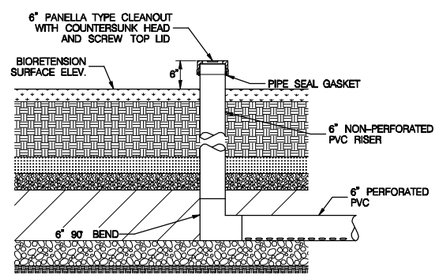

CLEANOUT DETAIL

NOT TO SCALE

DETAIL – INLET 1 (DIVERSION INLET)
MODIFIED TYPE "S" DOUBLE GRATE INLET

SCALE: 3/4" = 1'-0"

RK&K
81 MOSHER STREET | BALTIMORE, MD 21217
PH: (410) 728-2900 FAX: (410) 728-3160
Engineers Construction Managers Planners Scientists
www.rkk.com

PHOENIX ENGINEERING, INC.
CONSULTING ENGINEERS
1420-A Joh Avenue
BALTIMORE, MARYLAND 21227
(410) 247-8833 FAX 247-9397

MARYLAND TRANSPORTATION AUTHORITY
Engineering Division

ADDENDUMS & REVISIONS

NO.	DESCRIPTION	BY	DATE

I-95 FROM MORAVIA ROAD TO THE FORT McHENRY TUNNEL - PHASE 1 - SOUTHBOUND

I-95 (BALTIMORE CITY)

BMP NO. FT0004 - STORM WATER MANAGEMENT PROFILE & DETAIL SHEET

DESIGNED BY DRB	DRAWN BY VMS	CHECKED BY DRB
CONST. REVIEW BY -	DATE DECEMBER 2009	SCALE AS SHOWN

CONTRACT NO. FT 928-000-006

DRAWING NO. SW-2 of 5

SHEET NO. 53 OF 188

POND CONTOUR ELEVATION 61

POINT NO.	ROADWAY	STATION	OFFSET	ELEVATION	LENGTH	RADIUS
30101	I95 BL 01	650+38	159.61'	61		
C-301				61	20.00'	17.00'
30102	I95 BL 01	650+53	148.23'	61	8.76'	
30103	I95 BL 01	650+62	148.31'	61		
C-302				61	6.20'	15.00'
30104	I95 BL 01	650+68	149.64'	61	17.20'	
30105	I95 BL 01	650+84	156.70'	61		
C-303				61	24.66'	30.00'
30106	I95 BL 01	651+08	156.98'	61	11.57'	
30107	I95 BL 01	651+18	152.49'	61		
C-304				61	24.00'	30.00'
30108	I95 BL 01	651+42	152.57'	61		
C-305				61	19.86'	18.87'
30109	I95 BL 01	651+52	168.29'	61		
C-306				61	20.00'	17.00'
30110	I95 BL 01	651+43	184.67'	61	7.97'	
30111	I95 BL 01	651+36	188.10'	61		
C-307				61	3.07'	4.38'
30112	I95 BL 01	651+34	190.48'	61		
C-308				61	23.21'	19.06'
30113	I95 BL 01	651+18	205.86'	61	33.34'	
30114	I95 BL 01	650+86	212.34'	61		
C-309				61	18.00'	17.00'
30115	I95 BL 01	650+69	207.10'	61		
C-310				61	15.60'	17.63'
30116	I95 BL 01	650+65	192.58'	61		
C-311				61	4.00'	4.00'
30117	I95 BL 01	650+64	189.10'	61	12.32'	
30118	I95 BL 01	650+53	182.46'	61		
30119	I95 BL 01	650+52	182.11'	61	1	
C-312				61	16.00'	17.00'
30120	I95 BL 01	650+39	173.58'	61		
C-313				61	14.43'	17.29'

POND CONTOUR ELEVATION 66

POINT NO.	ROADWAY	STATION	OFFSET	ELEVATION	LENGTH	RADIUS
30211	I95 BL 01	650+73	76.48'	66	89.42'	
30212	I95 BL 01	651+52	117.95'	66		
C-369				66	14.68'	30.00'
30213	I95 BL 01	651+66	121.37'	66	19.62'	
30214	I95 BL 01	651+86	121.23'	66		
C-370				66	39.53'	25.87'
30215	I95 BL 01	652+12	145.53'	66	3.58'	
30216	I95 BL 01	652+12	149.11'	66		
C-371				66	8.28'	39.76'
30217	I95 BL 01	652+11	157.34'	66		
C-372				66	14.50'	30.48'
30218	I95 BL 01	652+14	171.40'	66		
C-373				66	40.30'	26.20'
30219	I95 BL 01	651+88	196.92'	66	9.25'	
30220	I95 BL 01	651+79	196.99'	66		
C-374				66	40.02'	53.48'
30221	I95 BL 01	651+44	214.14'	66		
C-375				66	25.29'	33.61'
30222	I95 BL 01	651+22	226.34'	66	10.10'	
30223	I95 BL 01	651+13	228.23'	66		
C-376				66	37.66'	45.89'
30224	I95 BL 01	650+82	248.66'	66		

POND CONTOUR ELEVATION 68

POINT NO.	ROADWAY	STATION	OFFSET	ELEVATION	LENGTH	RADIUS
30235	I95 BL 01	652+34	174.68'	68	68.65'	
30236	I95 BL 01	651+82	219.38'	68		

POND CONTOUR ELEVATION 62

POINT NO.	ROADWAY	STATION	OFFSET	ELEVATION	LENGTH	RADIUS
30121	I95 BL 01	650+34	158.03'	62		
C-314				62	25.68'	21.80'
30122	I95 BL 01	650+53	143.44'	62	8.79'	
30123	I95 BL 01	650+62	143.51'	62		
C-315				62	8.19'	19.80'
30124	I95 BL 01	650+70	145.26'	62	17.20'	
30125	I95 BL 01	650+86	152.32'	62		
C-316				62	20.71'	25.20'
30126	I95 BL 01	651+06	152.56'	62	11.57'	
30127	I95 BL 01	651+17	148.06'	62		
C-317				62	27.96'	34.84'
30128	I95 BL 01	651+44	148.21'	62		
C-318				62	13.07'	23.66'
30129	I95 BL 01	651+53	156.75'	62		
C-319				62	11.40'	5.06'
30130	I95 BL 01	651+62	153.46'	62	3.66'	
30131	I95 BL 01	651+62	149.81'	62		
30132	I95 BL 01	651+62	147.70'	62	2.10'	
C-320				62	22.30'	14.34'
30133	I95 BL 01	651+76	133.31'	62	10.12'	
30134	I95 BL 01	651+86	133.23'	62		
C-321				62	21.07'	13.79'
30135	I95 BL 01	652+00	146.13'	62	2.94'	
30136	I95 BL 01	652+00	149.12'	62		
C-322				62	10.12'	27.76'
30137	I95 BL 01	651+98	159.02'	62		
C-323				62	12.87'	18.53'
30138	I95 BL 01	652+02	171.02'	62		
C-324				62	21.93'	14.26'
30139	I95 BL 01	651+88	184.92'	62	13.69'	
30140	I95 BL 01	651+74	185.02'	62		
C-325				62	27.73'	14.59'
30141	I95 BL 01	651+60	166.94'	62		
C-326				62	5.65'	1.73'
30142	I95 BL 01	651+57	165.88'	62		
C-327				62	27.74'	21.80'
30143	I95 BL 01	651+45	188.97'	62	7.27'	
30144	I95 BL 01	651+38	192.13'	62		
C-328				62	28.28'	23.78'
30145	I95 BL 01	651+19	210.59'	62	33.30'	
30146	I95 BL 01	650+87	217.04'	62		
C-329				62	23.10'	21.80'
30147	I95 BL 01	650+66	210.27'	62		
C-330				62	18.92'	22.35'
30148	I95 BL 01	650+60	192.72'	62	11.00'	
30149	I95 BL 01	650+51	186.80'	62		
C-331				62	19.89'	21.80'
30150	I95 BL 01	650+35	175.91'	62		
C-332				62	18.45'	22.09'
30151	I95 BL 01	649+67	131.49'	62		
C-333				62	44.84'	20.61'
30152	I95 BL 01	649+56	96.67'	62		

POND CONTOUR ELEVATION 67

POINT NO.	ROADWAY	STATION	OFFSET	ELEVATION	LENGTH	RADIUS
30225	I95 BL 01	651+28	76.93'	67	89.86'	
30226	I95 BL 01	652+04	124.65'	67		
C-377				67	23.96'	28.87'
30227	I95 BL 01	652+15	145.34'	67	3.76'	
30228	I95 BL 01	652+15	149.11'	67		
C-378				67	7.90'	42.76'
30229	I95 BL 01	652+14	156.97'	67		
C-379				67	14.91'	33.48'
30230	I95 BL 01	652+17	171.50'	67		
C-380				67	44.89'	29.19'
30231	I95 BL 01	651+88	199.92'	67	9.03'	
30232	I95 BL 01	651+79	199.98'	67		
C-381				67	37.16'	49.66'
30233	I95 BL 01	651+47	216.65'	67	44.58'	
30234	I95 BL 01	651+17	249.97'	67		

POND CONTOUR ELEVATION 63

POINT NO.	ROADWAY	STATION	OFFSET	ELEVATION	LENGTH	RADIUS
30153	I95 BL 01	649+64	86.91'	63	120.32'	
30154	I95 BL 01	650+72	141.61'	63		
30155	I95 BL 01	650+87	148.67'	63	17.20'	
C-334				63	17.42'	21.20'
30156	I95 BL 01	651+04	148.88'	63	11.57'	
30157	I95 BL 01	651+15	144.37'	63		
C-335				63	26.93'	38.86'
30158	I95 BL 01	651+41	143.02'	63		
C-336				63	27.79'	28.97'
30159	I95 BL 01	651+66	133.74'	63		
C-337				63	10.75'	13.98'
30160	I95 BL 01	651+76	130.30'	63	9.40'	
30161	I95 BL 01	651+86	130.23'	63		
C-338				63	25.66'	16.79'
30162	I95 BL 01	652+03	145.94'	63	3.17'	
30163	I95 BL 01	652+03	149.12'	63		
C-339				63	9.58'	30.76'
30164	I95 BL 01	652+01	158.55'	63		
C-340				63	13.27'	21.53'
30165	I95 BL 01	652+05	171.12'	63		
C-341				63	26.50'	17.23'
30166	I95 BL 01	651+88	187.92'	63	9.67'	
30167	I95 BL 01	651+78	188.00'	63		
C-342				63	48.92'	65.36'
30168	I95 BL 01	651+34	206.63'	63		
C-343				63	16.47'	21.66'
30169	I95 BL 01	651+20	214.49'	63	33.30'	
30170	I95 BL 01	650+87	220.96'	63		
C-344				63	27.32'	25.80'
30171	I95 BL 01	650+63	212.97'	63		
C-345				63	19.71'	26.35'
30172	I95 BL 01	650+56	194.81'	63	7.79'	
30173	I95 BL 01	650+50	190.61'	63		
C-346				63	11.34'	25.80'
30174	I95 BL 01	650+39	186.24'	63	26.57'	
30175	I95 BL 01	650+16	172.80'	63		
C-347				63	37.86'	32.30'
30176	I95 BL 01	649+81	177.65'	63		

PRE-TREATMENT CONTOUR ELEVATION 59

POINT NO.	ROADWAY	STATION	OFFSET	ELEVATION	LENGTH	RADIUS
30250	I95 BL 01	651+76	142.31'	59	10.13'	
30237	I95 BL 01	651+85	142.23'	59		
C-378				59	7.91'	5.32'
30238	I95 BL 01	651+91	146.89'	59	2.45'	
30239	I95 BL 01	651+91	150.53'	59		
C-379				59	6.50'	18.76'
30240	I95 BL 01	651+90	155.50'	59		
C-380				59	9.62'	9.05'
30241	I95 BL 01	651+91	164.51'	59		
C-381				59	6.58'	9.53'
30242	I95 BL 01	651+93	171.18'	59		
C-382				59	8.13'	5.29'
30243	I95 BL 01	651+88	175.92'	59	13.71'	
30244	I95 BL 01	651+74	176.02'	59		
C-383				59	7.93'	5.16'
30245	I95 BL 01	651+69	171.09'	59		
C-384				59	6.58'	9.53'
30246	I95 BL 01	651+71	164.52'	59		
C-385				59	9.71'	9.19'
30247	I95 BL 01	651+72	155.48'	59		
C-386				59	6.19'	15.73'
30248	I95 BL 01	651+71	149.70'	59	2.03'	
30249	I95 BL 01	651+71	147.66'	59		
C-377				59	8.27'	5.32'

POND CONTOUR ELEVATION 64

POINT NO.	ROADWAY	STATION	OFFSET	ELEVATION	LENGTH	RADIUS
30177	I95 BL 01	649+69	77.13'	64	146.01'	
30178	I95 BL 01	651+03	135.99'	64		
C-348				64	18.60'	28.84'
30179	I95 BL 01	651+21	138.35'	64		
C-349				64	22.19'	42.86'
30180	I95 BL 01	651+43	139.27'	64		
C-350				64	24.25'	22.24'
30181	I95 BL 01	651+65	132.06'	64		
C-351				64	12.84'	16.71'
30182	I95 BL 01	651+76	127.30'	64	9.42'	
30183	I95 BL 01	651+86	127.23'	64		
C-352				64	30.24'	19.79'
30184	I95 BL 01	652+06	145.74'	64	3.36'	
30185	I95 BL 01	652+06	149.11'	64		
C-353				64	9.11'	33.76'
30186	I95 BL 01	652+05	158.11'	64		
C-354				64	13.69'	24.53'
30187	I95 BL 01	652+08	171.22'	64		
C-355				64	31.09'	20.21'
30188	I95 BL 01	651+88	190.92'	64	9.57'	
30189	I95 BL 01	651+78	191.00'	64		
C-356				64	45.91'	61.34'
30190	I95 BL 01	651+37	209.13'	64		
C-357				64	19.27'	25.61'
30191	I95 BL 01	651+21	218.42'	64	33.30'	
30192	I95 BL 01	650+88	224.89'	64		
C-358				64	23.66'	29.80'
30193	I95 BL 01	650+66	220.75'	64	26.02'	
30194	I95 BL 01	650+44	206.92'	64		
C-359				64	18.75'	12.34'
30195	I95 BL 01	650+27	211.44'	64		

PRE-TREATMENT CONTOUR ELEVATION 61

POINT NO.	ROADWAY	STATION	OFFSET	ELEVATION	LENGTH	RADIUS
30265	I95 BL 01	651+76	136.31'	61	10.13'	
30266	I95 BL 01	651+86	136.23'	61		
C-397				61	16.49'	10.79'
30267	I95 BL 01	651+97	146.32'	61	2.77'	
30268	I95 BL 01	651+97	149.12'	61		
C-398				61	9.31'	24.76'
30269	I95 BL 01	651+95	158.22'	61		
C-399				61	2.85'	2.63'
30270	I95 BL 01	651+95	160.61'	61		
C-400				61	11.11'	15.53'
30271	I95 BL 01	651+99	170.92'	61		
C-401				61	17.32'	11.26'
30272	I95 BL 01	651+88	181.92'	61	13.69'	
30273	I95 BL 01	651+74	182.02'	61		
C-402				61	17.06'	11.09'
30274	I95 BL 01	651+63	171.50'	61		
C-403				61	11.00'	15.15'
30275	I95 BL 01	651+66	161.19'	61		
C-404				61	3.40'	3.19'
30276	I95 BL 01	651+66	157.97'	61		
C-405				61	8.43'	21.41'
30277	I95 BL 01	651+65	149.78'	61	2.06'	
30278	I95 BL 01	651+65	147.69'	61		
C-406				61	17.63'	11.34'

POND CONTOUR ELEVATION 65

POINT NO.	ROADWAY	STATION	OFFSET	ELEVATION	LENGTH	RADIUS
30196	I95 BL 01	650+22	76.46'	65	135.29'	
30197	I95 BL 01	651+44	135.52'	65		
C-360				65	20.32'	16.11'
30198	I95 BL 01	651+62	130.33'	65		
C-361				65	15.39'	20.02'
30199	I95 BL 01	651+76	124.31'	65	9.44'	
301200	I95 BL 01	651+86	124.23'	65		
C-362				65	34.95'	22.87'
30201	I95 BL 01	652+09	145.71'	65	3.36'	
301202	I95 BL 01	652+09	149.11'	65		
C-363				65	8.68'	36.76'
30203	I95 BL 01	652+08	157.71'	65		
C-364				65	14.08'	27.48'
30204	I95 BL 01	652+11	171.30'	65		
C-365				65	35.70'	23.21'
30205	I95 BL 01	651+88	193.92'	65	9.41'	
30206	I95 BL 01	651+78	193.99'	65		
C-366				65	42.96'	57.40'
30207	I95 BL 01	651+40	211.64'	65		
C-367				65	22.28'	29.61'
30208	I95 BL 01	651+22	222.34'	65	37.50'	
30209	I95 BL 01	650+85	229.42'	65		
C-368				65	52.61'	64.49'
30210	I95 BL 01	650+43	259.10'	65		

PRE-TREATMENT CONTOUR ELEVATION 60

POINT NO.	ROADWAY	STATION	OFFSET	ELEVATION	LENGTH	RADIUS
30251	I95 BL 01	651+76	139.31'	60	10.13'	
30252	I95 BL 01	651+86	139.23'	60		
C-387				60	11.83'	7.79'
30253	I95 BL 01	651+94	146.44'	60	2.68'	
30254	I95 BL 01	651+94	148.81'	60		
C-388				60	8.18'	21.76'
30255	I95 BL 01	651+92	157+12	60		
C-389				60	5.99'	5.63'
30256	I95 BL 01	651+93	162.74'	60		
C-390				60	8.68'	12.58'
30257	I95 BL 01	651+96	170.85'	60		
C-391				60	12.71'	8.26'
30258	I95 BL 01	651+88	178.92'	60	13.71	
30259	I95 BL 01	651+74	179.02'	60		
C-392				60	12.51'	8.13'
30260	I95 BL 01	651+66	171.27'	60		
C-393				60	8.74'	12.04'
30261	I95 BL 01	651+68	163.07'	60		
C-394				60	6.60'	6.19'
30262	I95 BL 01	651+69	156.85'	60		
C-395				60	7.31'	18.56'
30263	I95 BL 01	651+68	149.73'	60	2.06'	
30264	I95 BL 01	651+68	147.68'	60		
C-396				60	12.97'	8.34'

NOTE: ALL OFFSETS ARE TO THE LEFT SIDE OF THE BASELINE

RK&K
81 MOSHER STREET | BALTIMORE, MD 21217
PH: (410) 728-2900 FAX: (410) 728-3160
Engineers Construction Managers Planners Scientists
www.rkk.com

PHOENIX ENGINEERING, INC.
CONSULTING ENGINEERS
1420-A Joh Avenue
BALTIMORE, MARYLAND 21227
(410) 247-8833 FAX 247-9397

MARYLAND TRANSPORTATION AUTHORITY
Engineering Division

ADDENDUMS & REVISIONS

NO.	DESCRIPTION	BY	DATE

I-95 FROM MORAVIA ROAD TO THE FORT McHENRY TUNNEL - PHASE 1 - SOUTHBOUND

I-95 (BALTIMORE CITY)

STAKEOUT FOR PRE-TREATMENT AND BIO-RETENTION FACILITY BMP NO. FT0004

DESIGNED BY DRB | DRAWN BY VMS | CHECKED BY DRB
CONST. REVIEW BY - | DATE DECEMBER 2009 | SCALE 1' = 30'

CONTRACT NO. FT 928-000-006
DRAWING NO. SW-3 of 5
SHEET NO. 54 OF 188

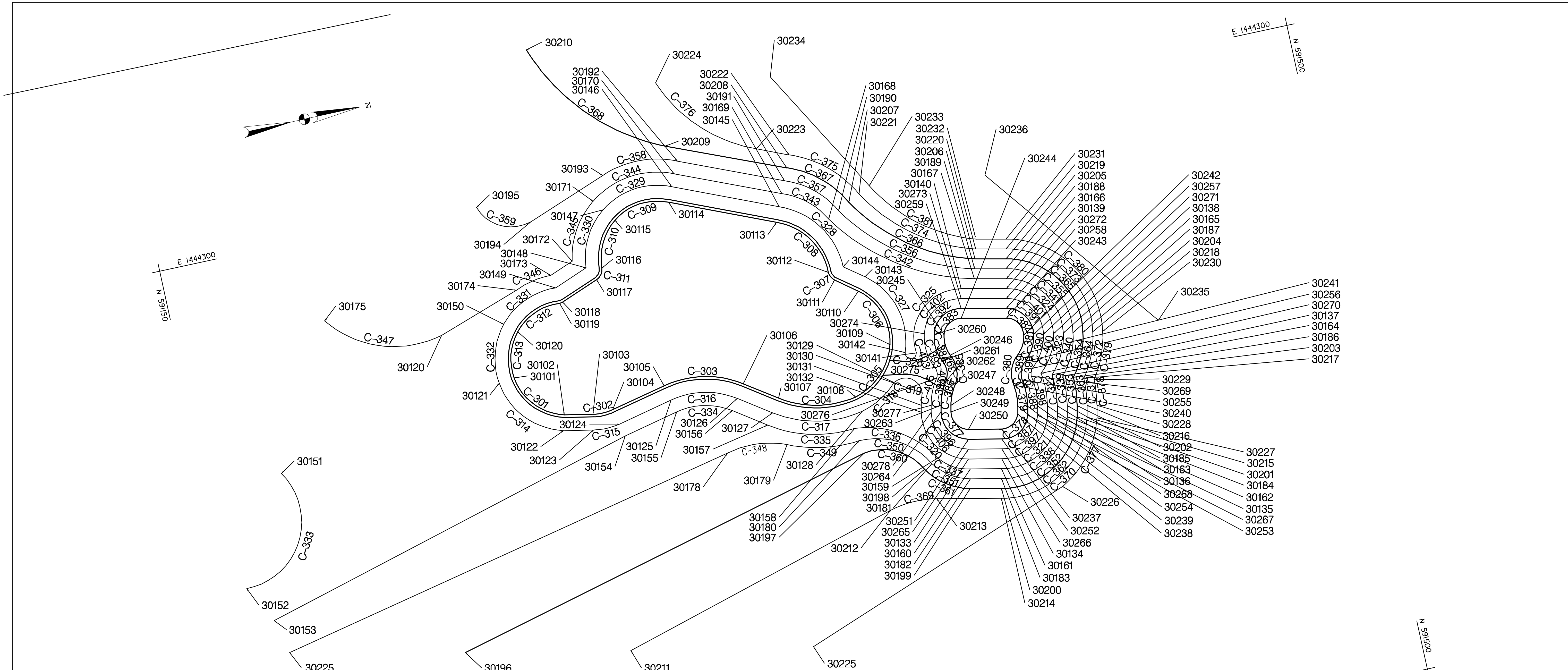

NOTE: ALL OFFSETS ARE TO THE LEFT SIDE OF THE BASELINE

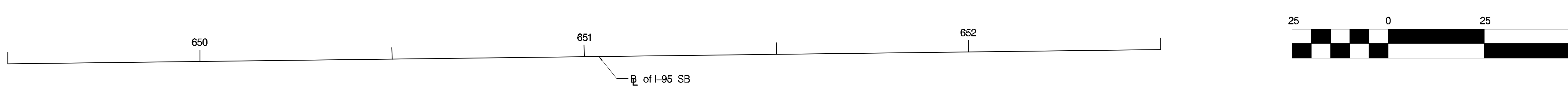

RK&K
81 MOSHER STREET | BALTIMORE, MD 21217
PH: (410) 728-2900 FAX: (410) 728-3160
Engineers Construction Managers Planners Scientists
www.rkk.com

PHOENIX ENGINEERING, INC.
CONSULTING ENGINEERS
1420-A Joh Avenue
BALTIMORE, MARYLAND 21227
(410) 247-8833 FAX 247-9397

MARYLAND TRANSPORTATION AUTHORITY

Engineering Division

ADDENDUMS & REVISIONS

NO.	DESCRIPTION	BY	DATE

I-95 FROM MORAVIA ROAD TO THE FORT McHENRY TUNNEL - PHASE 1 - SOUTHBOUND

I-95 (BALTIMORE CITY)

STAKEOUT FOR PRE-TREATMENT AND BIO-RETENTION FACILITY BMP NO. FT0004

DESIGNED BY DRB	DRAWN BY VMS	CHECKED BY DRB
CONST. REVIEW BY -	DATE DECEMBER 2009	SCALE N.T.S.

CONTRACT NO. FT 928-000-006

DRAWING NO. SW-4 of 5

M:\projects\2005\05041_mdta\Task 13 - Moravia to FMT Design\CADD\Phase 1 - SB\Plans\pSW-SB104_195.dgn
Thursday, December 03, 2009 AT 12:44 PM

BIORETENTION – BMP NO. FT0004 CHECKLIST

ACTIVITY	DATE COMPLETED	INSPECTOR'S INITIAL	DATE INITIALLY ACCEPTED
1. DRAINAGE AREA STABILIZED PRIOR TO INSTALLATION			
2. RUNOFF DIVERTED			
3. FACILITY AREA CLEARED			
4. FACILITY LOCATION STAKED OUT			
5. EXCAVATED TO PROPER SIZE AND LOCATION			
6. STABLE SIDE SLOPES			
7. LATERAL SLOPES FINISHED AS SHOWN ON PLANS			
8. SUBSOILS ARE NOT COMPACTED DURING CONSTRUCTION AS SHOWN ON PLANS			
9. UNDERDRAIN SYSTEM AND OBSERVATION WELL INSTALLED AS DESIGNATED ON PLANS			
10. PLANTING SOIL ADEQUATE IN COMPOSITION			
11. PLACEMENT OF GEOTEXTILES AND FILTER FABRIC			
12. PLACEMENT OF SAND FILTER LAYER, IF APPLICABLE			
13. PLACEMEMT OF GRAVEL DIAPHRAGM			
14 APPURTENANT CONVEYANCE SYSTEMS (DIVERSION STRUCTURES, FILTERS, INLETS,			
OUTLETS AND FLOW DISTRIBUTION STRUCTURES AS DESIGNATED ON PLANS			
15. A DROP OF AT LEAST 6" AT INLET			
16. PRETREATMENT FACILITIES IN PLACE			
17. COMPLIES WITH PLANTING SPECS			
18. MULCH LAYER INSTALLED (3" LAYER)			
19. DIRECT ACCESS IS PROVIDED FOR MAINTENANCE AND REHABILITATION			
20. FINAL GRADING AND PERMANENT STABILIZATION COMPLETED			
21. AS–BUILT DOCUMENTATION			

SPECIFICALLY REQUIRED BY COMAR 26.17.02.10 (TAKING PICTURES ARE APPROPIATE DOCUMENTATION VERSION 1.1 04/16/03

RK&K
81 MOSHER STREET | BALTIMORE, MD 21217
PH: (410) 728-2900 FAX: (410) 728-3160
Engineers Construction Managers Planners Scientists
www.rkk.com

PHOENIX ENGINEERING, INC.
CONSULTING ENGINEERS
1420-A Joh Avenue
BALTIMORE, MARYLAND 21227
(410) 247-8833 FAX 247-9397

MARYLAND TRANSPORTATION AUTHORITY
Engineering Division

ADDENDUMS & REVISIONS

NO.	DESCRIPTION	BY	DATE

I-95 FROM MORAVIA ROAD TO THE FORT McHENRY TUNNEL - PHASE 1 - SOUTHBOUND
I-95 (BALTIMORE CITY)
BIO-RETENTION FACILITY BMP NO. FT0004 CHECKLIST

DESIGNED BY DRB | DRAWN BY VMS | CHECKED BY DRB
CONST. REVIEW BY - | DATE DECEMBER 2009 | SCALE N.T.S.

CONTRACT NO. FT 928-000-006
DRAWING NO. SW-5 of 5
SHEET NO. 56 OF 188

STANDARD EROSION AND SEDIMENT CONTROL NOTES:

1. THE CONTRACTOR SHALL NOTIFY THE ADMINISTRATION (WMA) 537-3510 SEVEN (7) DAYS BEFORE COMMENCING ANY LAND DISTURBING ACTIVITY AND, SHALL CONDUCT A PRE-CONSTRUCTION MEETING ONSITE WITH THE SUBCONTRACTORS, AND OTHER FEDERAL, STATE. LOCAL REGULATORY AGENCIES TO PROVIDE THE OPPORTUNITY TO DISCUSS THE FINAL CONSTRUCTION PLANS AND PERMIT CONDITIONS. ALL ATENDEES OF THIS MEETING SHALL BE NOTIFIED A MINIMUM OF 14 DAYS PRIOR TO THE DATE OF THE MEETING.

2. THE CONTRACTOR MUST NOTIFY WMA IN WRITING AND BY TELEPHONE AT THE FOLLOWING POINTS:
   A. THE REQUIRED PRE-CONSTRUCTION MEETING.
   B. FOLLOWING INSTALLATION OF SEDIMENT CONTROL MEASURES.
   C. DURING THE INSTALLATION OF SEDIMENT BASINS (TO BE CONVERTED INTO PERMANENT STORMWATER MANAGEMENT STRUCTURES) AT THE REQUIRED INSPECTION POINTS (SEE INSPECTION CHECKLIST ON PLAN). NOTIFICATION PRIOR TO COMMENCING CONSTRUCTION OF EACH STEP IS MANDATORY.
   D. PRIOR TO REMOVAL OR MODIFICATION OF ANY SEDIMENT CONTROL STRUCTURE(S).
   E. PRIOR TO REMOVAL OF ALL SEDIMENT CONTROL DEVICES.
   F. PRIOR TO FINAL ACCEPTANCE.

3. THE CONTRACTOR SHALL CONSTRUCT ALL EROSION AND SEDIMENT CONTROL MEASURES PER THE APPROVED PLAN AND CONSTRUCTION SEQUENCE AND SHALL HAVE THEM INSPECTED AND APPROVED BY THE AGENCY INSPECTOR OR WMA INSPECTOR PRIOR TO BEGINNING ANY OTHER LAND DISTURBANCES. MINOR SEDIMENT CONTROL DEVICE LOCATION ADJUSTMENTS MAY BE MADE IN THE FIELD WITH THE APPROVAL OF THE FROM WMA INSPECTOR. THE CONTRACTOR SHALL ENSURE THAT ALL RUNOFF FROM DISTURBED AREAS IS DIRECTED TO THE SEDIMENT CONTROL DEVICES AND SHALL NOT REMOVE ANY EROSION OR SEDIMENT CONTROL MEASURE WITHOUT PRIOR PERMISSION FROM WMA INSPECTOR AND AGENCY INSPECTOR. THE CONTRACTOR MUST OBTAIN PRIOR AGENCY AND WMA APPROVAL FOR CHANGES TO THE SEDIMENT CONTROL PLAN AND/OR SEQUENCE OF CONSTRUCTION. .

4. THE CONTRACTOR SHALL PROTECT ALL POINTS OF CONSTRUCTION INGRESS AND EGRESS TO PREVENT DEPOSITION OF MATERIALS ONTO PUBLIC ROADS. ALL MATERIALS DEPOSITED ONTO PUBLIC ROADS SHALL BE REMOVED IMMEDIATELY.

5. THE CONTRACTOR SHALL INSPECT DAILY AND MAINTAIN CONTINUOUSLY IN AN EFFECTIVE OPERATING CONDITION ALL EROSION AND SEDIMENT CONTROL MEASURES UNTIL SUCH TIMES AS THEY ARE REMOVED WITH PRIOR PERMISSION FROM WMA INSPECTOR AND AGENCY INSPECTOR.

6. ALL SEDIMENT BASINS, TRAP EMBANKMENTS AND SLOPE, PERMITTED DIKES, SWALES AND ALL DISTURBED SLOPES STEEPER OR EQUAL TO 3:1 SHALL BE STABILIZED WITH SOD OR SEED AND ANCHORED STRAY MULCH, OR OTHER APPROVED STABILIZATION MEASURES, AS SOON AS POSSIBLE BUT NO LATER THAN SEVEN (7) CALENDAR DAYS AFTER ESTABLISHMENT. ALL AREAS DISTURBED OUTSIDE OF THE PERIMETER SEDIMENT CONTROL SYSTEM MUST BE MINIMIZED. MAINTENANCE MUST BE PERFORMED AS NECESSARY TO ENSURE CONTINUED STABILIZATION. (REQUIREMENT FOR STABILIZATION MAY BE REDUCED TO THREE (3) DAYS FOR SENSITIVE AREAS.)

7. THE CONTRACTOR SHALL APPLY SOD OR SEED AND ANCHORED STRAW MULCH, OR OTHER APPROVED STABILIZATION MEASURES TO ALL DISTURBED AREAS AND STOCKPILES WITHIN FOURTEEN (14) CALENDAR DAYS AFTER STRIPPING AND GRADING ACTIVITIES HAVE CEASED IN THE AREA. MAINTENANCE SHALL BE PERFORMED AS NECESSARY TO ENSURE CONTINUED STABILIZATION. (REQUIREMENT MAY BE REDUCED TO SEVEN (7) DAYS FOR SENSITIVE AREAS.)

8. PRIOR TO REMOVAL OF SEDIMENT CONTROL MEASURES, THE CONTRACTOR SHALL STABILIZE AND HAVE PERMANENT STABILIZATION FOR ALL CONTRIBUTORY DISTURBED AREAS USING SOD OR AN APPROVED PERMANENT SEED MIXTURE WITH REQUIRED SOIL AMENDMENTS AND AN APPROVED ANCHORED MULCH. WOOD FIBER MULCH MAY PROMOTE SHEET FLOW DRAINAGE. AREAS BROUGHT TO FINISHED GRADE DURING THE SEEDING SEASON SHALL BE PERMANENTLY STABILIZED AS SOON AS POSSIBLE, BUT NOT LATER THAN FOURTEEN (14) CALENDAR DAYS AFTER ESTABLISHMENT. WHEN PROPERTY IS BROUGHT TO FINISHED GRADE DURING THE MONTHS OF NOVEMBER THROUGH FEBRUARY, AND PERMANENT STABILIZATION IS FOUND TO BE IMPRACTICAL, TEMPORARY SEED AND ANCHORED STRAW MULCH SHALL BE APPLIED TO DISTURBED AREAS. THE FINAL PERMANENT STABILIZATION OF SUCH PROPERTY SHALL BE APPLIED BY MARCH 15 OR EARLIER IF GROUND AND WEATHER CONDITIONS ALLOW.

9. THE SITE'S APPROVAL LETTER. APPROVED EROSION AND SEDIMENT CONTROL PLANS, DAILY LOG BOOKS AND TEST REPORTS SHALL BE AVAILABLE AT THE SITE FOR INSPECTION BY DULY AUTHORIZED OFFICIALS OF WMA AND THE AGENCY RESPONSIBLE FOR PROJECT.

10. SURFACE DRAINAGE FLOWS OVER UNSTABILIZED CUT AND FILL SLOPES SHALL BE CONTROLLED BY EITHER PREVENTING DRAINAGE FLOWS FROM TRAVERSING THE SLOPES OR BY INSTALLING PROTECTIVE DEVICES TO LOWER THE WATER DOWNSLOPE WITHOUT CAUSING EROSION. DIKES SHALL BE INSTALLED AND MAINTAINED AT THE TOP OF A CUT OR FILL SLOPE UNTIL THE SLOPE AND DRAINAGE AREA TO IT ARE FULLY STABILIZED. AT WHICH TIME THEY MUST BE REMOVED AND FINAL GRADING DONE TO PROMOTE SHEET FLOW DRAINAGE. PROTECTIVE METHODS MUST BE PROVIDED AT POINTS OF CONCENTRATED FLOW WHERE EROSION IS LIKELY TO OCCUR.

11. PERMANENT SWALES OR OTHER POINTS OF CONCENTRATED WATER FLOW SHALL BE STABILIZED WITH SOD OR SEED WITH APPROVED EROSION CONTROL MATTING, RIP-RAP, OR BY OTHER APPROVED STABILIZATION MEASURES.

12. TEMPORARY SEDIMENT CONTROL DEVICES MAY BE REMOVED, WITH PERMISSION OF WMA INSPECTOR AND AGENCY INSPECTORS, WITHIN THIRTY (30) CALENDAR DAYS FOLLOWING ESTABLISHMENT OF PERMANENT STABILIZATION IN ALL CONTRIBUTORY DRAINAGE AREAS. STORMWATER MANAGEMENT STRUCTURES USED TEMPORARILY FOR SEDIMENT CONTROL SHALL BE CONVERTED TO THE PERMANENT CONFIGURATION WITHIN THIS TIME PERIOD AS WELL.

13. NO PERMANENT CUT OR FILL SLOPE WITH A GRADIENT STEEPER THAN 3:1 WILL BE PERMITTED IN LAWN MAINTENANCE AREAS. A SLOPE GRADIENT OF UP TO 2:1 WILL BE PERMITTED IN NON-MAINTENANCE AREAS PROVIDED THAT THOSE AREAS ARE INDICATED ON THE EROSION AND SEDIMENT CONTROL PLAN WITH A LOW-MAINTENANCE GROUND COVER SPECIFIED FOR PERMANENT STABILIZATION. SLOPE GRADIENT STEEPER THAN 2:1 WILL NOT BE PERMITTED WITH VEGETATIVE STABILIZATION.

14. FOR FINISHED GRADING, THE CONTRACTOR SHALL PROVIDE ADEQUATE GRADIENTS TO PREVENT WATER FROM PONDING FOR MORE THAN TWENTY FOUR (24) HOURS AFTER THE END OF A RAINFALL EVENT. DRAINAGE COURSES AND SWALE FLOW AREAS MAY TAKE AS LONG AS FORTY-EIGHT (48) HOURS AFTER THE END OF A RAINFALL EVENT TO DRAIN. AREAS DESIGNED TO HAVE STANDING WATER SHALL NOT BE REQUIRED TO MEET THIS REQUIREMENT.

15. SEDIMENT TRAPS OR BASINS ARE NOT PERMITTED WITHIN 20 FEET OF A FOUNDATION THAT EXISTS OR IS UNDER CONSTRUCTION, NO STRUCTURE MAY BE CONSTRUCTED WITHIN 20 FEET OF AN ACTIVE SEDIMENT TRAP OR BASIN.

16. THE WMA INSPECTOR HAS THE OPTION OF REQUIRING ADDITIONAL SAFETY OR SEDIMENT CONTROL MEASURES, IF DEEMED NECESSARY.

17. ALL TRAP DEPTH DIMENSIONS ARE RELATIVE TO THE OUTLET ELEVATION. ALL TRAPS MUST HAVE A STABLE OUTFALL. ALL TRAPS AND BASINS SHALL HAVE STABLE INFLOW POINTS.

18. VEGETATIVE STABILIZATION SHALL BE PERFORMED IN ACCORDANCE WITH THE STANDARDS AND SPECIFICATIONS FOR SOIL EROSION AND SEDIMENT CONTROL. REFER TO APPROPRIATE SPECIFICATIONS FOR TEMPORARY SEEDING, PERMANENT SEEDING, MULCHING SODDING, AND GROUND COVERS.

19. SEDIMENT SHALL BE REMOVED AND THE TRAP OR BASIN RESTORED TO ITS ORIGINAL DIMENSIONS WHEN THE SEDIMENT HAS ACCUMULATED TO ONE QUARTER OF THE TOTAL DEPTH OF THE TRAP OR BASIN. TOTAL DEPTH SHALL BE MEASURED FROM THE TRAP OR BASIN BOTTOM TO THE CREST OF THE OUTLET.

20. SEDIMENT REMOVED FROM TRAPS (AND BASINS) SHALL BE PLACED AND STABILIZED IN APPROVED AREAS, BUT NOT WITHIN A FLOODPLAIN, WETLAND OR TREE-SAVE AREA. WHEN PUMPING SEDIMENT LADEN WATER, THE DISCHARGE MUST BE DIRECTED TO A SEDIMENT TRAPPING DEVICE PRIOR TO RELEASE FROM THE SITE. A SUMP PIT MAY BE USED IF SEDIMENT TRAPS THEMSELVES ARE BEING PUMPED OUT.

21. ALL WATER REMOVED FROM EXCAVATED AREAS (E.G. UTILITY TRENCHES) SHALL BE PASSED THROUGH AN APPROVED DEWATERING PRACTICE OR PUMPED TO A SEDIMENT TRAP OR BASIN PRIOR TO DISCHARGE FROM THE SITE (I.E. VIA FUNCTIONAL STORM DRAIN SYSTEM OR TO STABLE GROUND SURFACE).

22. SEDIMENT CONTROL FOR UTILITY CONSTRUCTION FOR AREAS OUTSIDE OF DESIGNED CONTROLS OR AS DIRECTED BY ENGINEER OR WMA INSPECTOR:
   A. CALL "MISS UTILITY" AT 1-800-257-7777 48 HOURS PRIOR TO THE START OF WORK.
   B. EXCAVATED TRENCH MATERIAL SHALL BE PLACED ON THE HIGH SIDE OF THE TRENCH.
   C. TRENCHES FOR UTILITY INSTALLATION SHALL BE BACKFIELD, COMPACTED, AND STABILIZED AT THE END OF EACH WORKING DAY. NO MORE TRENCH SHALL BE OPENED THAN CAN BE COMPLETED THE SAME DAY. UNLESS:
   D. TEMPORARILY SILT FENCE SHALL BE PLACED IMMEDIATELY DOWNSTREAM OF ANY DISTURBED AREA INTENDED TO REMAIN DISTURBED FOR MORE THAN ONE DAY.

23. WHERE DEEMED APPROPRIATE BY THE ENGINEER OR INSPECTOR, SEDIMENT BASINS AND TRAPS MAY NEED TO BE SURROUNDED WITH AN APPROVED SAFETY FENCE. THE FENCE MUST CONFORM TO LOCAL ORDINANCES AND REGULATIONS. THE DEVELOPER OR OWNER SHALL CHECK WITH LOCAL BUILDING OFFICIALS ON APPLICABLE IS SAFETY REQUIREMENTS. WHERE SAFETY FENCE DEEMED APPROPRIATE AND LOCAL ORDINANCES DO NOT SPECIFY FENCING SIZES AND TYPES. THE FOLLOWING SHALL BE USED AS A MINIMUM STANDARD: THE SAFETY FENCE MUST BE MADE OF WELDED WIRE AND AT LEAST 42 INCHES HIGH, HAVE POSTS SPACED NO FARTHER APART THAN 8 FEET, HAVE MESH OPENINGS NO GREATER THAN 2 INCHES IN WIDTH AND 4 INCHES IN HEIGHT WITH A MINIMUM OF 14 GAUGE WIRE. SAFETY FENCE MUST BE MAINTAINED AND IN GOOD CONDITION AT ALL TIMES.

24. OFF-SITE SPOIL OR BORROW AREAS ON STATE OR FEDERAL PROPERTY MUST HAVE PRIOR APPROVAL BY WMA AND OTHER APPLICABLE STATE, FEDERAL, AND LOCAL AGENCIES: OTHERWISE APPROVAL MUST BE GRANTED BY THE LOCAL AUTHORITIES. ALL WASTE AND BORROW AREAS OFF-SITE MUST BE PROTECTED BY SEDIMENT CONTROL MEASURES AND STABILIZED.

25. SITES WHERE INFILTRATION DEVICES ARE USED FOR THE CONTROL OF STORMWATER, EXTREME CARE MUST BE TAKEN TO PREVENT RUNOFF FROM UNSTABILIZED AREAS FROM ENTERING THE STRUCTURE DURING CONSTRUCTION. SEDIMENT CONTROL DEVICES PLACED IN INFILTRATION AREAS MUST HAVE BOTTOM ELEVATIONS AT LEAST TWO (2) FEET HIGHER THAN THE FINISH GRADE BOTTOM ELEVATION OF THE INFILTRATION PRACTICE. WHEN CONVERTING A SEDIMENT TRAP TO AN INFILTRATION DEVICE. ALL ACCUMULATED SEDIMENT MUST BE REMOVED AND DISPOSED OF PRIOR TO FINAL GRADING OF INFILTRATION DEVICE.

26. WHEN A STORM DRAIN SYSTEM OUTFALL IS DIRECTED TO A SEDIMENT TRAP OR SEDIMENT BASIN AND THE SYSTEM IS TO BE USED FOR TEMPORARILY CONVEYING SEDIMENT LADEN WATER, ALL STORM DRAIN INLETS IN NON-SUMP AREAS SHALL HAVE TEMPORARY ASPHALT BERMS CONSTRUCTED AT THE TIME OF BASE PAVING TO DIRECT GUTTER FLOW INTO THE INLETS TO AVOID SURCHARGING AND OVERFLOW OF INLETS IN SUMP AREAS.

27. SITE INFORMATION:
   A. TOTAL AREA OF PROJECT SITE – 11 ACRES
   B. AREA DISTURBED – 4.1 ACRES
   C. AREA TO BE ROOFED OR PAVED – 0.08 ACRES
   D. TOTAL CUT – 2,060 CUBIC YARDS
   E. TOTAL FILL – 0 CUBIC YARDS
   F. OFF-SITE WASTE/BORROW AREA LOCATION —TO BE DETERMINED BY CONTRACTOR

DESIGN CERTIFICATION
I HEREBY CERTIFY THAT THIS PLAN HAS BEEN DESIGNED IN ACCORDANCE WITH THE 1994 MARYLAND STANDARDS AND SPECIFICATIONS FOR SOIL EROSION AND SEDIMENT CONTROL, THE 2000 MARYLAND STORMWATER DESIGN MANUAL, VOLUMES I & II AND THE MARYLAND DEPARTMENT OF THE ENVIRONMENT EROSION AND SEDIMENT CONTROL AND STORMWATER MANAGEMENT REGULATIONS.

John R. Heinrichs	
NAME	SIGNATURE
14920	10-22-09
MARYLAND. REGISTRATION NUMBER. (P.E.), R.L.S., OR R.L.A. (circle)	DATE

STATE OF MARYLAND — REGISTERED PROFESSIONAL ENGINEER

PROFESSIONAL CERTIFICATION

I HEREBY CERTIFY THAT THESE DOCUMENTS WERE PREPARED OR APPROVED BY ME, AND THAT I AM A DULY LICENSED PROFESSIONAL ENGINEER UNDER THE LAWS OF THE STATE OF MARYLAND, LICENSE NO.14920 EXPIRATION DATE: 5/12/2010.

STANDARD STABILIZATION NOTE:

FOLLOWING INITIAL SOIL DISTURBANCE OR REDISTURBANCE, PERMANENT OR TEMPORARY STABILIZATION SHALL BE COMPLETED WITHIN SEVEN (7) CALENDAR DAYS AS TO THE SURFACE OF ALL PERIMETER CONTROLS, DIKES, SWALES, DITCHES, PERIMETER SLOPES, AND ALL SLOPES GREATER THAN 3 HORIZONTAL TO 1 VERTICAL (3:1): AND FOURTEEN (14) DAYS AS TO ALL OTHER DISTURBED OR GRADED AREAS ON THE PROJECT SITE.

SUPPLEMENTAL EROSION AND SEDIMENT CONTROL NOTES:

1. STAGING AND STOCKPILING:
THE CONTRACTOR SHALL ESTABLISH STAGING AND STOCKPILE AREAS AT LOCATIONS APPROVED BY THE ENGINEER AND WMA INSPECTOR. THESE AREAS SHALL BE ESTABLISHED SUCH THAT WETLAND, WETLAND BUFFERS, FORESTED AREAS, AND OTHER ENVIRONMENTALLY SENSITIVE AREAS ARE NOT IMPACTED. EROSION AND SEDIMENT CONTROL MEASURES SUCH AS SILT FENCE SHALL BE INSTALLED DOWNGRADE OF THE STAGING AND STOCKPILING AREAS AS DIRECTED BY THE ENGINEER AND WITH THE APPROVAL OF THE MDE INSPECTOR.

2. STABILIZED CONSTRUCTION ENTRANCE LOCATIONS:
THE LOCATIONS OF STABILIZED CONSTRUCTION ENTRANCES ON THE PLANS ARE RECOMMENDED AND HAVE BEEN APPROVED BY MDE. THE CONTRACTOR MAY DETERMINE OTHER LOCATIONS FOR INGRESS/EGRESS TO THE CONSTRUCTION SITE WITH THE APPROVAL OF THE ENGINEER AND WMA INSPECTOR.

3. STORM DRAIN AND DITCH CONSTRUCTION:
STORM DRAIN SYSTEMS AND PERMANENT DITCHES/SWALES SHALL BE CONSTRUCTED FROM DOWNSTREAM TO UPSTREAM UNLESS OTHERWISE NOTED ON THE PLANS OR APPROVED BY THE ENGINEER.

4. COORDINATION WITH MAINTENANCE OF TRAFFIC PLAN:
THE SEDIMENT AND EROSION CONTROL SEQUENCES SHALL BE COORDINATED WITH THE MAINTENANCE OF TRAFFIC PLANS TO MAINTAIN CONTINUITY OF THE PRACTICES DURING ALL PHASES OF THE PROPOSED WORK. CONCURRENT CONSTRUCTION WITHIN THE VARIOUS PHASES MAY BE UNDERTAKEN IN ACCORDANCE WITH THE MAINTENANCE OF TRAFFIC PLAN. APPROPRIATE EROSION AND SEDIMENT CONTROL MEASURES SHALL BE IN PLACE PRIOR TO BEGINNING CONCURRENT WORK. SEDIMENT AND EROSION CONTROL MEASURES SHALL BE REMOVED UPON COMPLETION OF THEIR INTENDED FUNCTION. PERMANENT STABILIZATION OF CONTRIBUTORY DRAINAGE AREA AND PRIOR APPROVAL FROM THE SEDIMENT CONTROL INSPECTOR. SEDIMENT AND EROSION CONTROL MEASURES NECESSARY FOR SUBSEQUENT PHASE OF THE WORK SHALL BE MAINTAINED AS REQUIRED BY THE STANDARDS AND SPECIFICATIONS.

5. DEWATERING
ANY EFFLUENT FROM DEWATERING FOUNDATIONS, TRENCHES AND OTHER DISTURBED AREAS MUST BE TREATED BY AN APPROVED SEDIMENT CONTROL DEVICE BEFORE BEING DISCHARGED.

6. SEQUENCE OF CONSTRUCTION
THE SEQUENCE OF CONSTRUCTION INCLUDED IN THESE PLANS IS APPROVED BY THE MDE. THIS SEQUENCE OF CONSTRUCTION MAY BE MODIFIED BY THE CONTRACTOR. HOWEVER, THE CONTRACTOR MUST OBTAIN MDE APPROVAL FOR ANY MODIFICATIONS PRIOR TO IMPLEMENTING A REVISED SEQUENCE OF CONSTRUCTION IN THE FIELD.

STANDARDS AND SPECIFICATIONS FOR
VEGETATIVE STABILIZATION

(1994 MARYLAND DEPARTMENT OF THE ENVIRONMENT)

SECTION 1 – VEGETATIVE STABILIZATION METHODS AND MATERIALS

A. SITE PREPARATION

I. INSTALL EROSION AND SEDIMENT CONTROL STRUCTURES (EITHER TEMPORARY OR PERMANENT) SUCH AS DIVERSIONS, GRADE STABILIZATION STRUCTURES, BERMS, WATERWAYS, OR SEDIMENT CONTROL BASINS.

II. PERFORM ALL GRADING OPERATIONS AT RIGHT ANGLES TO THE SLOPE. FINAL GRADING AND SHAPING IS NOT USUALLY NECESSARY FOR TEMPORARY SEEDING.

III. SCHEDULE REQUIRED SOIL TESTS TO DETERMINE SOIL AMENDMENT COMPOSITION AND APPLICATION RATES FOR SITES HAVING DISTURBED AREA OVER 5 ACRES.

B. SOIL AMENDMENTS (FERTILIZER AND LIME SPECIFICATIONS)

I. SOIL TESTS MUST BE PERFORMED TO DETERMINE THE EXACT RATIOS AND APPLICATION RATES FOR BOTH LIME AND FERTILIZER ON SITES HAVING DISTURBED AREAS OVER 5 ACRES. SOIL ANALYSIS MAY BE PERFORMED BY THE UNIVERSITY OF THE DISTRICT OF COLUMBIA OR A CERTIFIED COMMERCIAL LABORATORY. SOIL SAMPLES TAKEN FOR ENGINEERING PURPOSES MAY ALSO BE USED FOR CHEMICAL ANALYSES.
ii. FERTILIZERS SHALL BE UNIFORM IN COMPOSITION, FREE FLOWING AND SUITABLE FOR ACCURATE APPLICATION BY APPROVED EQUIPMENT. MANURE MAY BE SUBSTITUTED FOR FERTILIZER WITH PRIOR APPROVAL FROM THE APPROPRIATE APPROVAL AUTHORITY. FERTILIZERS SHALL ALL BE DELIVERED TO THE SITE FULLY LABELED ACCORDING TO THE APPLICABLE STATE FERTILIZER LAWS AND SHALL BEAR THE NAME, TRADE NAME OR TRADEMARK AND WARRANTEE OF THE PRODUCER.
iii. LIME MATERIALS SHALL BE GROUND LIMESTONE (HYDRATED OR BURNT LIME MAY BE SUBSTITUTED) WHICH CONTAINS AT LEAST 50% TOTAL OXIDES (CALCIUM OXIDE PLUS MAGNESIUM OXIDE). LIMESTONE SHALL BE GROUND TO SUCH FINENESS THAT AT LEAST 50% WILL PASS THROUGH A #100 MESH SIEVE AND 98 – 100% WILL PASS THROUGH A #20 MESH SIEVE.
iv. INCORPORATE LIME AND FERTILIZER INTO THE TOP 3 – 5" OF SOIL BY DISKING OR OTHER SUITABLE MEANS.

C. SEEDBED PREPARATION

i. TEMPORARY SEEDING
a. SEEDBED PREPARATION SHALL CONSIST OF LOOSENING SOIL TO A DEPTH OF 3" TO 5" BY MEANS OF SUITABLE AGRICULTURAL OR CONSTRUCTION EQUIPMENT, SUCH AS DISC HARROWS OR CHISEL PLOWS OR RIPPERS MOUNTED ON CONSTRUCTION EQUIPMENT.AFTER THE SOIL IS LOOSENED, IT SHOULD NOT BE ROLLED OR DRAGGED SMOOTH BUT LEFT IN THE ROUGHENED CONDITION. SLOPED AREAS (GREATER THAN 3:1) SHOULD BE TRACKED LEAVING THE SURFACE IN AN IRREGULAR CONDITION WITH RIDGES RUNNING PARALLEL TO THE CONTOUR OF THE SLOPE.
b. APPLY FERTILIZER AND LIME AS PRESCRIBED ON THE PLANS.
c. INCORPORATE LIME AND FERTILIZER INTO THE TOP 3 – 5" OF SOIL BY DISKING OR OTHER SUITABLE MEANS.

ii. PERMANENT SEEDING
a. MINIMUM SOIL CONDITIONS REQUIRED FOR PERMANENT VEGETATIVE ESTABLISHMENT:

1. SOIL PH SHALL BE BETWEEN 6.0 AND 7.0.

2. SOLUBLE SALTS SHALL BE LESS THAN 500 PARTS PER MILLION (PPM).

3. THE SOIL SHALL CONTAIN LESS THAN 40% CLAY BUT ENOUGH FINE GRAINED MATERIAL (> 30% SILT PLUS CLAY) TO PROVIDE THE CAPACITY TO HOLD A MODERATE AMOUNT OF MOISTURE. AN EXCEPTION IS IF LOVEGRASS OR SERECIA LESPEDEZA IS TO BE PLANTED, THEN A SANDY SOIL (<30% SILT PLUS CLAY) WOULD BE ACCEPTABLE

4. SOIL SHALL CONTAIN 1.5% MINIMUM ORGANIC MATTER BY WEIGHT.

5. SOIL MUST CONTAIN SUFFICIENT PORE SPACE TO PERMIT ADEQUATE ROOT PENETRATION.

6. IF THESE CONDITIONS CANNOT BE MET BY SOILS ON SITE, ADDING TOPSOIL IS REQUIRED IN ACCORDANCE WITH SECTION 38 STANDARD AND SPECIFICATION FOR TOPSOIL.
b. AREAS PREVIOUSLY GRADED IN CONFORMANCE WITH THE DRAWINGS SHALL BE MAINTAINED IN A TRUE AND EVEN GRADE, THEN SCARIFIED OR OTHERWISE LOOSENED TO A DEPTH OF 3 – 5" TO PERMIT BONDING OF THE TOPSOIL TO THE SURFACE AREA AND TO CREATE HORIZONTAL EROSION CHECK SLOTS TO PREVENT TOPSOIL FROM SLIDING DOWN A SLOPE.SLOTS TO PREVENT TOPSOIL FROM SLIDING DOWN A SLOPE.

c. APPLY SOIL AMENDMENTS AS PER SOIL TEST OR AS INCLUDED ON THE PLANS.

d. MIX SOIL AMENDMENTS INTO THE TOP 3– 5" OF TOPSOIL BY DISKING OR OTHER SUITABLE MEANS. LAWN AREAS SHOULD BE RAKED TO SMOOTH THE SURFACE, REMOVE LARGE OBJECTS LIKE STONES AND BRANCHES, AND READY THE AREA FOR SEED APPLICATION. WHERE SITE CONDITIONS WILL NOT PERMIT NORMAL SEEDBED PREPARATION, LOOSEN SURFACE SOIL BY DRAGGING WITH A HEAVY CHAIN OR OTHER EQUIPMENT TO ROUGHEN THE SURFACE. STEEP SLOPES (STEEPER THAN 3:1) SHOULD BE TRACKED BY A DOZER LEAVING THE SOIL IN AN IRREGULAR CONDITION WITH RIDGES RUNNING PARALLEL TO THE CONTOUR OF THE SLOPE. THE TOP 1–3" OF SOIL SHOULD BE LOOSE AND FRIABLE. SEEDBED LOOSENING MAY NOT BE NECESSARY ON NEWLY DISTURBED AREAS.

D. SEED SPECIFICATIONS
I. ALL SEED MUST MEET THE REQUIREMENTS OF THE MARYLAND STATE SEED LAW. ALL SEED SHALL BE SUBJECT TO RE–TESTING BY A RECOGNIZED SEED LABORATORY. ALL SEED USED SHALL HAVE BEEN TESTED WITHIN THE 6 MONTHS IMMEDIATELY PRECEDING THE DATE OF SOWING SUCH MATERIAL ON THIS JOB.

NOTE: SEED TAGS SHALL BE MADE AVAILABLE TO THE INSPECTOR TO VERIFY TYPE AND RATE OF SEED USED.

ii. INOCULANT – THE INOCULANT FOR TREATING LEGUME SEED IN THE SEED MIXTURES SHALL BE A PURE CULTURE OF NITROGEN–FIXING BACTERIA PREPARED SPECIFICALLY FOR THE SPECIES. INOCULANTS SHALL NOT BE USED LATER THAN THE DATE INDICATED ON THE CONTAINER. ADD FRESH INOCULANT AS DIRECTED ON PACKAGE. USE FOUR TIMES THE RECOMMENDED RATE WHEN HYDROSEEDING. NOTE: IT IS VERY IMPORTANT TO KEEP INOCULANT AS COOL AS POSSIBLE UNTIL USED. TEMPERATURES ABOVE 75–80 F. CAN WEAKEN BACTERIA AND MAKE THE INOCULANT LESS EFFECTIVE.

E. METHOD OF SEEDING
I. HYDROSEEDING: APPLY SEED UNIFORMLY WITH HYDROSEEDER (SLURRY INCLUDES SEED AND FERTILIZER), BROADCAST OR DROP SEEDER, OR A CULTIPACKER SEEDER.:
a. IF FERTILIZER IS BEING APPLIED AT THE TIME OF SEEDING, THE APPLICATION RATES AMOUNTS WILL NOT EXCEED THE FOLLOWING: NITROGEN; MAXIMUM OF 100 LBS. PER ACRE TOTAL OF SOLUBLE NITROGEN; P2O5 (PHOSPHOROUS): 200 LBS/AC; K2O (POTASSIUM): 200 LBS/AC.
b. LIME – USE ONLY GROUND AGRICULTURAL LIMESTONE, (UP TO 3 TONS PER ACRE MAY BE APPLIED BY HYDROSEEDING). NORMALLY, NOT MORE THAN 2 TONS ARE APPLIED BY HYDROSEEDING AT ANYONE TIME. DO NOT USE BURNT OR HYDRATED LIME WHEN HYDROSEEDING.
c. SEED AND FERTILIZER SHALL BE MIXED ON SITE AND SEEDING SHALL BE DONE IMMEDIATELY AND WITHOUT INTERRUPTION.

ii. DRY SEEDING: THIS INCLUDES USE OF CONVENTIONAL DROP OR BROADCAST SPREADERS.
a. SEED SPREAD DRY SHALL BE INCORPORATED INTO THE SUBSOIL AT THE RATES PRESCRIBED ON THE TEMPORARY OR PERMANENT SEEDING SUMMARIES OR TABLES 42 OR 43. THE SEEDED AREA SHALL THEN BE ROLLED WITH A WEIGHTED ROLLER TO PROVIDE GOOD SEED TO SOIL CONTACT.
b.WHERE PRACTICAL, SEED SHOULD BE APPLIED IN TWO DIRECTIONS PERPENDICULAR TO EACH OTHER. APPLY HALF THE SEEDING RATE IN EACH DIRECTION.

iii. DRILL OR CULTIPACKER SEEDING: MECHANIZED SEEDERS THAT APPLY AND COVER SEED WITH SOIL.
a. CULTIPACKING SEEDERS ARE REQUIRED TO BURY THE SEED IN SUCH A FASHION AS TO PROVIDE AT LEAST 1/4 INCH OF SOIL COVERING. SEEDBED MUST BE FIRM AFTER PLANTING.
b. WHERE PRACTICAL, SEED SHOULD BE APPLIED IN TWO DIRECTIONS PERPENDICULAR TO EACH OTHER. APPLY HALF THE SEEDING RATE IN EACH DIRECTION.

F. MULCH SPECIFICATIONS (IN ORDER OF PREFERENCE)
i. STRAW SHALL CONSIST OF THOROUGHLY THRESHED WHEAT, RYE OR OAT STRAW, EXCESSIVELY DUSTY AND SHALL BE FREE OF NOXIOUS WEED SEEDS AS SPECIFIED BY THE NRCS SEED LAW.

NOTE: ONLY STERILE STRAW MULCH SHOULD BE USED IN AREAS WHERE ONE SPECIES OF GRASS IS DESIRED.

ii. WOOD CELLULOSE FIBER MULCH (WCFM)
a. WCFM SHALL CONSIST OF SPECIALLY PREPARED WOOD CELLULOSE PROCESSED INTO A UNIFORM FIBROUS PHYSICAL STATE.
b. WCFM SHALL BE DYED GREEN OR CONTAIN A GREEN DYE IN THE PACKAGE THAT WILL PROVIDE AN APPROPRIATE COLOR TO FACILITATE VISUAL INSPECTION OF THE UNIFORMLY SPREAD SLURRY.
c. WCFM, INCLUDING DYE, SHALL CONTAIN NO GERMINATION OR GROWTH INHIBITING FACTORS.
d. WCFM MATERIALS SHALL BE MANUFACTURED AND PROCESSED IN SUCH A MANNER THAT THE WOOD CELLULOSE FIBER MULCH WILL REMAIN IN UNIFORM SUSPENSION IN WATER UNDER AGITATION AND WILL BLEND WITH SEED, FERTILIZER AND OTHER ADDITIVES TO FORM A HOMOGENEOUS SLURRY. THE MULCH MATERIAL SHALL FORM A BLOTTER–LIKE GROUND COVER, ON APPLICATION, HAVING MOISTURE ABSORPTION AND PERCOLATION PROPERTIES AND SHALL MOISTURE ABSORPTION AND PERCOLATION PROPERTIES AND SHALL COVER AND HOLD GRASS SEED IN CONTACT WITH THE SOIL WITHOUT INHIBITING THE GROWTH OF THE GRASS SEEDLINGS.

II. PERMANENT SEEDING
e. WCFM MATERIAL SHALL CONTAIN NO ELEMENTS OR COMPOUNDS AT CONCENTRATION LEVELS THAT WILL BE PHYTO–TOXIC.
f. WCFM MUST CONFORM TO THE FOLLOWING PHYSICAL REQUIREMENTS: FIBER LENGTH TOAPPROXIMATELY 10 MM., DIAMETER APPROXIMATELY 1 MM., PH RANGE OF 4.0 TO 8.5, ASH CONTENT OF 1.6% MAXIMUM AND WATER HOLDING CAPACITY OF 90% MINIMUM.
G. MULCHING SEEDED AREAS – MULCH SHALL BE APPLIED TO ALL SEEDED AREAS IMMEDIATELY AFTER SEEDING.
i. IF GRADING IS COMPLETED OUTSIDE OF THE SEEDING SEASON, MULCH ALONE SHALL BE APPLIED AS PRESCRIBED IN THIS SECTION AND MAINTAINED UNTIL THE SEEDING SEASON RETURNS AND SEEDING CAN BE PERFORMED IN ACCORDANCE WITH THESE SPECIFICATIONS.
ii. WHEN STRAW MULCH IS USED, IT SHALL BE SPREAD OVER ALL SEEDED AREAS AT THE RATE OF 2 TONS/ACRE. MULCH SHALL BE APPLIED TO A UNIFORM LOOSE DEPTH OF BETWEEN 1" AND 2". MULCH APPLIED SHALL ACHIEVE A UNIFORM DISTRIBUTION AND DEPTH SO THAT THE SOIL SURFACE IS NOT EXPOSED. IF A MULCH ANCHORING TOOL IS TO BE USED, THE RATE SHOULD BE INCREASED TO 2.5 TONS/ACRE.
iii. WOOD CELLULOSE FIBER USED AS A MULCH SHALL BE APPLIED AT A NET DRY WEIGHT OF 1,500 LBS. PER ACRE. THE WOOD CELLULOSE FIBER SHALL BE MIXED WITH WATER, AND THE MIXTURE SHALL CONTAIN A MAXIMUM OF 50 LBS. OF WOOD CELLULOSE FIBER PER 100 GALLONS
OF WATER.
H. SECURING STRAW MULCH (MULCH ANCHORING): MULCH ANCHORING SHALL BE PERFORMED IMMEDIATELY FOLLOWING MULCH APPLICATION TO MINIMIZE LOSS BY WIND OR WATER. THIS MAY BE DONE BY ONE OF THE FOLLOWING METHODS (LISTED BY PREFERENCE), DEPENDING
UPON SIZE OF AREA AND EROSION HAZARD:
I. A MULCH ANCHORING TOOL IS A TRACTOR DRAWN IMPLEMENT DESIGNED TO PUNCH AND ANCHOR MULCH INTO THE SOIL SURFACE A MINIMUM OF TWO (2) INCHES. THIS PRACTICE IS MOST
EFFECTIVE ON LARGE AREAS, BUT IS LIMITED TO FLATTER SLOPES WHERE EQUIPMENT CAN OPERATE SAFELY. IF USED ON SLOPING LAND, THIS PRACTICE SHOULD THIS PRACTICE SHOULD BE USED ON THE CONTOUR IF POSSIBLE.
ii. WOOD CELLULOSE FIBER MAY BE USED FOR ANCHORING STRAW. THE FIBER BINDER SHALL BE APPLIED AT A NET DRY WEIGHT OF 750 POUNDS/ACRE. THE WOOD CELLULOSE FIBER SHALL BE MIXED WITH WATER AND THE MIXTURE SHALL CONTAIN A MAXIMUM OF 50 POUNDS OF WOOD
CELLULOSE FIBER PER 100 GALLONS OF WATER.
iii. APPLICATION OF LIQUID BINDERS SHOULD BE HEAVIER AT THE EDGES WHERE WIND CATCHES
MULCH, SUCH AS IN VALLEYS AND ON CRESTS OF BANKS. THE REMAINDER OF AREA SHOULD APPEAR UNIFORM AFTER BINDER APPLICATION. SYNTHETIC BINDERS – SUCH AS ACRYLIC DLR (AGRO–TACK), DCA–70, PETROSET, TERRA TAX II, TERRA TACK AR OR OTHER APPROVED EQUAL MAY BE USED AT RATES RECOMMENDED BY MANUFACTURER TO ACHOR MULCH.
iv. LIGHTWEIGHT PLASTIC NETTING MAY BE STAPLED OVER THE MULCH ACCORDING TO MANUFACTURER'S RECOMMENDATIONS. NETTING IS USUALLY AVAILABLE IN ROLLS 4' TO 15' FEET WIDE AND 300 TO 3,000 FEET LONG.
I. INCREMENTAL STABILIZATION – CUT SLOPES
i. ALL CUT SLOPES SHALL BE DRESSED, PREPARED, SEEDED AND MULCHED AS THE WORK PROGRESSES.
SLOPES SHALL BE EXCAVATED AND STABILIZED IN EQUAL INCREMENTS NOT TO EXCEED 15'.
ii. CONSTRUCTION SEQUENCE (REFER TO FIGURE 4 BELOW):
a. EXCAVATE AND STABILIZE ALL TEMPORARY SWALES, SIDE DITCHES, OR BERMS THAT WILL BE USED
TO CONVEY RUNOFF FROM THE EXCAVATION.
b. PERFORM PHASE 1 EXCAVATION, DRESS, AND STABILIZE.
c. PERFORM PHASE 2 EXCAVATION, DRESS, AND STABILIZE. OVERSEED PHASE 1 AREAS AS NECESSARY.
d. PERFORM FINAL PHASE EXCAVATION, DRESS, AND STABILIZE. OVERSEED PREVIOUSLY SEEDED AREAS
AS NECESSARY.

NOTE: ONCE EXCAVATION HAS BEGUN THE OPERATION SHOULD BE CONTINUOUS FROM GRUBBING
THROUGH THE COMPLETION OF GRADING AND PLACEMENT OF TOPSOIL (IF REQUIRED) AND PERMANENT
SEED AND MULCH. ANY INTERRUPTIONS IN THE OPERATION OR COMPLETING THE OPERATION OUT OF
THE SEEDING SEASON WILL NECESSITATE THE APPLICATION OF TEMPORARY STABILIZATION.

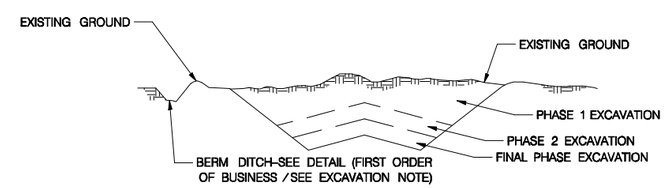

FIGURE 4 INCREMENTAL STABILIZATION – CUT

RK&K
81 MOSHER STREET | BALTIMORE, MD 21217
PH: (410) 728-2900 FAX: (410) 728-3160
Engineers Construction Managers Planners Scientists
www.rkk.com

PHOENIX ENGINEERING, INC.
CONSULTING ENGINEERS
1420–A Joh Avenue
BALTIMORE, MARYLAND 21227
(410) 247-8833 FAX 247-9397

MARYLAND TRANSPORTATION AUTHORITY
Engineering Division

ADDENDUMS & REVISIONS			
NO.	DESCRIPTION	BY	DATE

I-95 FROM MORAVIA ROAD TO THE FORT McHENRY TUNNEL - PHASE 1 - SOUTHBOUND
I-95 (BALTIMORE CITY)
EROSION AND SEDIMENT CONTROL GENERAL NOTES

CONTRACT NO. FT 928-000-006
DRAWING NO. ED–2 of 5

DESIGNED BY DRB | DRAWN BY VMS | CHECKED BY DRB
CONST. REVIEW BY - | DATE DECEMBER 2009 | SCALE AS SHOWN
SHEET NO. 58 OF 188

STANDARDS AND SPECIFICATIONS FOR VEGETATIVE STABILIZATION (CONTINUED)

J. INCREMENTAL STABILIZATION OF EMBANKMENTS – FILL SLOPES

i. EMBANKMENTS SHALL BE CONSTRUCTED IN LIFTS AS PRESCRIBED ON THE PLANS.

ii. SLOPES SHALL BE STABILIZED IMMEDIATELY WHEN THE VERTICAL HEIGHT OF THE MULTIPLE LIFTS REACHES 15'. OR WHEN THE GRADING OPERATION CEASES AS PRESCRIBED IN THE PLANS.

iii. AT THE END OF EACH DAY, TEMPORARY BERMS AND PIPE SLOPE DRAINS SHOULD BE CONSTRUCTED ALONG THE TOP EDGE OF THE EMBANKMENT TO INTERCEPT SURFACE RUNOFF AND CONVEY IT DOWN THE SLOPE IN A NON–EROSIVE MANNER TO A SEDIMENT TRAPPING DEVICE.

iv. CONSTRUCTION SEQUENCE: REFER TO FIGURE 5 (BELOW).

a. EXCAVATE AND STABILIZE ALL TEMPORARY SWALES, SIDE DITCHES, OR BERMS THAT WILL BE USED TO DIVERT RUNOFF AROUND THE FILL. CONSTRUCT SLOPE SILT FENCE ON LOW SIDE OF FILL AS SHOWN IN FIGURE 5. UNLESS OTHER METHODS ON THE PLANS ADDRESS THIS AREA.

b. PLACE PHASE 1 EMBANKMENT, DRESS AND STABILIZE.

c. PLACE PHASE 2 EMBANKMENT, DRESS AND STABILIZE.

d. PLACE FINAL PHASE EMBANKMENT, DRESS AND STABILIZE. OVERSEED PREVIOUSLY SEEDED AS NECESSARY.

NOTE: ONCE THE PLACEMENT OF FILL HAS BEGUN THE OPERATION SHOULD BE CONTINUOUS FROM GRUBBING THROUGH THE COMPLETION OF GRADING AND PLACEMENT OF TOPSOIL (IF REQUIRED) AND PERMANENT SEED AND MULCH. ANY INTERRUPTIONS IN THE OPERATION OR COMPLETING THE OPERATION OUT OF THE SEEDING SEASON WILL NECESSITATE THE APPLICATION OF TEMPORARY STABILIZATION.

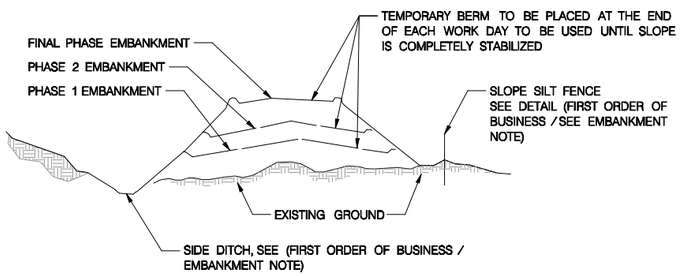

FIGURE 5 INCREMENTAL STABILIZATION – FILL

SECTION II– TEMPORARY SEEDING

VEGETATION – ANNUAL GRASS OR GRAIN USED TO PROVIDE COVER ON DISTURBED AREAS FOR UP TO 12 MONTHS. FOR LONGER DURATION OF VEGETATIVE COVER, PERMANENT SEEDING IS REQUIRED.

A. SEED MIXTURES – TEMPORARY SEEDING

i.THE APPROPRIATE PLANT HARDINESS ZONE (FROM FIGURE 5) AND ENTER THEM IN THE TEMPORARY SEEDING SUMMARY BELOW, ALONG WITH APPLICATION RATES, SEEDING DATES AND SEEDING DEPTHS. IF THIS SUMMARY IS NOT PUT ON THE PLANS AND COMPLETED, THEN TABLE 43 MUST BE PUT ON THE PLANS.

ii.FOR SITES HAVING SOIL TESTS PERFORMED, THE RATES SHOWN ON THIS TABLE SHALLBE FOR SITES HAVING SOIL TESTS PERFORMED, THE RATES SHOWN ON THIS TABLE SHALL BE DELETED AND THE RATES RECOMMENDED BY THE TESTING AGENCY SHALL BE WRITTEN IN. SOIL TESTS ARE NOT REQUIRED FOR TEMPORARY SEEDING.

(SEE TEMPORARY SEEDING SUMMARY)

SECTION III: PERMANENT SEEDING

SEEDING GRASS AND LEGUMES TO ESTABLISH GROUND COVER FOR A MINIMUM PERIOD OF ONE YEAR ON DISTURBED AREAS GENERALLY RECEIVING LOW MAINTENANCE.

A. SEED MIXTURES – PERMANENT SEEDING

i. APPROPRIATE PLANT HARDINESS ZONE (FROM FIGURE 6) AND ENTER THEM IN THE PERMANENT SEEDING SUMMARY BELOW, ALONG WITH APPLICATION RATES AND SEEDING DATES. SEEDING DEPTHS CAN BE ELIMATED USING TABLE 43. IF THIS SUMMARY IS NOT PUT ON THE CONSTRUCTION PLANS AND COMPLETED, THEN TABLE 42 MUST BE PUT ON THE PLANS.ADDITIONAL PLANTING SPECIFICATIONS FOR EXCEPTIONAL SITES SUCH AS SHORELINES, STREAMBANKS, OR DUNES OR FOR SPECIAL PURPOSES SUCH AS WILDLIFE OR AESTHETIC TREATMENT MAY BE FOUND IN USDA–SCS TECHNICAL FIELD OFFICE GUIDE, SECTION 342–CRITICAL AREA PLANTING. FOR SPECIAL LAWN MAINTENANCE AREAS, SEE SECTIONS IV SOD AND V TURFGRASS.

ii. FOR SITES HAVING DISTURBED AREA OVER 5 ACRES, THE RATES SHOWN ON THIS TABLE SHALL BE DELETED AND THE RATES RECOMMENDED BY THE SOIL TESTING AGENCY SHALL BE WRITTEN IN.

iii. FOR AREAS RECEIVING LOW MAINTENANCE, APPLY UREAFORM FERTILIZER (46–0–0) AT 3 1/2 LBS/ 1000 SQ. FT. (150 LBS/AC), IN ADDITION TO THE ABOVE SOIL AMENDMENTS SHOWN IN THE TABLE BELOW, TO BE PERFORMED AT THE TIME OF SEEDING.

(SEE PERMANENT SEEDING SUMMARY)

SECTION IV – SOD: TO PROVIDE QUICK COVER ON DISTURBED AREAS (2:1 GRADE OR FLATTER).

A. GENERAL SPECIFICATIONS

i. CLASS OF TURFGRASS SOD SHALL BE MARYLAND OR VIRGINIA STATE CERTIFIED OR APPROVED. SOD LABELS SHALL BE MADE AVAILABLE TO THE JOB FOREMAN AND INSPECTOR.

ii. SOD SHALL BE MACHINE CUT AT A UNIFORM SOIL THICKNESS OF 3/4", PLUS OR MINUS 1/4", AT THE TIME OF CUTTING. MEASUREMENT FOR THICKNESS SHALL EXCLUDE TOP GROWTH AND THATCH. INDIVIDUAL PIECES OF SOD SHALL BE CUT TO THE SUPPLIERS WIDTH AND LENGTH. MAXIMUM ALLOWABLE DEVIATION FROM STANDARD WIDTHS AND LENGTHS SHALL BE 5 PERCENT. BROKEN PADS AND TORN OR UNEVEN ENDS WILL NOT BE ACCEPTABLE.

iii. STANDARD SIZE SECTIONS OF SOD SHALL BE STRONG ENOUGH TO SUPPORT THEIR OWN WEIGHT AND RETAIN THEIR SIZE AND SHAPE WHEN SUSPENDED VERTICALLY WITH A FIRM GRASP ON THE UPPER 10 PERCENT OF THE SECTION.

iv. SOD SHALL NOT BE HARVESTED OR TRANSPLANTED WHEN MOISTURE CONTENT (EXCESSIVELY DRY OR WET) MAY ADVERSELY AFFECT ITS SURVIVAL.

v. SOD SHALL BE HARVESTED, DELIVERED, AND INSTALLED WITHIN A PERIOD OF 36 HOURS. SOD NOT TRANSPLANTED WITHIN THIS PERIOD SHALL BE APPROVED BY AN AGRONOMIST OR SOIL SCIENTIST PRIOR TO ITS INSTALLATION.

B. SOD INSTALLATION

i. DURING PERIODS OF EXCESSIVELY HIGH TEMPERATURE OR IN AREAS HAVING DRY SUBSOIL, THE SUBSOIL SHALL BE LIGHTLY IRRIGATED IMMEDIATELY PRIOR TO LAYING THE SOD.

ii. THE FIRST ROW OF SOD SHALL BE LAID IN A STRAIGHT LINE WITH SUBSEQUENT ROWS PLACED PARALLEL TO AND TIGHTLY WEDGED AGAINST EACH OTHER. LATERAL JOINTS SHALL BE STAGGERED TO PROMOTE MORE UNIFORM GROWTH AND STRENGTH. ENSURE THAT SOD IS NOT STRETCHED OR OVERLAPPED AND THAT ALL JOINTS ARE BUTTED TIGHT IN ORDER TO PREVENT VOIDS, WHICH WOULD CAUSE AIR DRYING OF THE ROOTS.

iii. WHEREVER POSSIBLE, SOD SHALL BE LAID WITH THE LONG EDGES PARALLEL TO THE CONTOUR AND WITH STAGGERING JOINTS. SOD SHALL BE ROLLED AND TAMPED, PEGGED OR OTHERWISE SECURED TO PREVENT SLIPPAGE ON SLOPES AND TO ENSURE SOLID CONTACT BETWEEN SOD ROOTS AND THE UNDERLYING SOIL SURFACE.

iv. SOD SHALL BE WATERED IMMEDIATELY FOLLOWING ROLLING OR TAMPING UNTIL THE UNDERSIDE OF THE NEW SOD PAD AND SOIL SURFACE BELOW THE SOD ARE THOROUGHLY WET. THE OPERATIONS OF LAYING, TAMPING AND IRRIGATING FOR ANY PIECE OF SOD SHALL BE COMPLETED WITHIN EIGHT HOURS.

C. SOD MAINTENANCE

i. IN THE ABSENCE OF ADEQUATE RAINFALL, WATERING SHALL BE PERFORMED DAILY OR AS OFTEN AS NECESSARY DURING THE FIRST WEEK AND IN SUFFICIENT QUANTITIES TO MAINTAIN MOIST SOIL TO A DEPTH OF 4". WATERING SHOULD BE DONE DURING THE HEAT OF THE DAY TO PREVENT WILTING.

ii. AFTER THE FIRST WEEK, SOD WATERING IS REQUIRED AS NECESSARY TO MAINTAIN ADEQUATE MOISTURE CONTENT.

iii. THE FIRST MOWING OF SOD SHOULD NOT BE ATTEMPTED UNTIL THE SOD IS FIRMLY ROOTED. NO MORE THAN 1/3 OF THE GRASS LEAF SHALL BE REMOVED BY THE INITIAL CUTTING OR SUBSEQUENT CUTTINGS. GRASS HEIGHT SHALL BE MAINTAINED BETWEEN 2" AND 3" UNLESS OTHERWISE SPECIFIED.

SECTION V – TURFGRASS ESTABLISHMENT

AREAS WHERE TURFGRASS MAY BE DESIRED INCLUDE LAWNS, PARKS, PLAYGROUNDS, AND COMMERCIAL SITES WHICH WILL RECEIVE A MEDIUM TO HIGH LEVEL OF MAINTENANCE. AREAS TO RECEIVE SEED SHALL BE TILLED BY DISKING OR OTHER APPROVED METHODS TO A DEPTH OF 2 TO 4 INCHES, LEVELED AND RAKED TO PREPARE A PROPER SEEDBED. STONES AND DEBRIS OVER 1 1/2 INCHES IN DIAMETER SHALL BE REMOVED. THE RESULTING SEEDBED SHALL BE IN SUCH CONDITION THAT FUTURE MOWING OF GRASSES WILL POSE NO DIFFICULTY.

NOTE: CHOOSE CERTIFIED MATERIAL. CERTIFIED MATERIAL IS THE BEST GUARANTEE OF CULTIVAR PURITY.

A. TURFGRASS MIXTURES

i. KENTUCKY BLUEGRASS – FULL SUN MIXTURE – FOR USE IN AREAS THAT RECEIVE INTENSIVE MANAGEMENT. RECOMMENDED CERTIFIED KENTUCKY BLUEGRASS CULTIVARS SEEDING RATE: 1.5 TO 2.0 POUNDS/1000 SQUARE FEET. A MINIMUM OF THREE BLUEGRASS CULTIVARS SHOULD BE CHOSEN RANGING FROM A MINIMUM OF 10% TO A MAXIMUM OF 35% OF THE MIXTURE BY WEIGHT.

ii. KENTUCKY BLUEGRASS/PERENNIAL RYE – FULL SUN MIXTURE – FOR USE IN FULL SUN AREAS WHERE RAPID ESTABLISHMENT IS NECESSARY AND WHEN TURF WILL RECEIVE MEDIUM TO INTENSIVE MANAGEMENT. CERTIFIED PERENNIAL RYEGRASS CULTIVARS/CERTIFIED KENTUCKY BLUEGRASS SEEDING RATE: 2 POUNDS MIXTURE/1000 SQUARE FEET. A MINIMUM OF 3 KENTUCKY BLUEGRASS CULTIVARS MUST BE CHOSEN, WITH EACH CULTIVAR RANGING FROM 10% TO 35% OF THE MIXTURE BY WEIGHT.

iii. TALL FESCUE/KENTUCKY BLUEGRASS – FULL SUN MIXTURE – FOR USE IN DROUGHT PRONE AREAS AND/OR FOR AREAS RECEIVING LOW TO MEDIUM MANAGEMENT IN FULL SUN TO MEDIUM SHADE. RECOMMENDED MIXTURE INCLUDES; CERTIFIED TALL FESCUE CULTIVARS 95–100%, CERTIFIED KENTUCKY BLUEGRASS CULTIVARS 0– 5%. SEEDING RATE: 5 TO 8 LB/1,000 SF. ONE OR MORE CULTIVARS MAY BE BLENDED.

iv. KENTUCKY BLUEGRASS/FINE FESCUE – SHADE MIXTURE – FOR USE IN AREAS WITH SHADE IN BLUEGRASS LAWNS. FOR ESTABLISHMENT IN HIGH QUALITY, INTENSIVELY MANAGED TURF AREA. MIXTURE INCLUDES; CERTIFIED KENTUCKY BLUEGRASS CULTIVARS 30–40% AND CERTIFIED FINE FESCUE AND 60–70 %. SEEDING RATE: 1 1/2– 3 LBS/1000 SQUARE FEET. A MINIMUM OF 3 KENTUCKY BLUEGRASS CULTIVARS MUST BE CHOSEN, WITH EACH CULTIVAR RANGING FROM A MINIMUM OF 10% TO A MAXIMUM OF 35% OF THE MIXTURE BY WEIGHT.

NOTE: TURFGRASS VARIETIES SHOULD BE SELECTED FROM THOSE LISTED IN THE MOST CURRENT UNIVERSITY OF MARYLAND PUBLICATION, AGRONOMY MIMEO #77, "TURFGRASS CULTIVAR RECOMMENDATIONS FOR MARYLAND".

B. IDEAL TIMES OF SEEDING

WESTERN MD: MARCH 15–JUNE 1, AUGUST 1 – OCTOBER 15
(HARDINESS ZONES – 5b, 6a)
CENTRAL MD: MARCH 1 – MAY 15, AUGUST 15–OCTOBER 15
(HARDINESS ZONE –6b)
SOUTHERN MD, EASTERN SHORE: MARCH 1 – MAY 15, AUGUST 15 –OCTOBER 15
(HARDINESS ZONES – 7a, 7b)

C. IRRIGATION

IF SOIL MOISTURE IS DEFICIENT, SUPPLY NEW SEEDINGS WITH ADEQUATE WATER FOR PLANT GROWTH (1/2"–1" EVERY 3 TO 4 DAYS DEPENDING ON SOIL TEXTURE) UNTIL THEY ARE FIRMLY ESTABLISHED. THIS IS ESPECIALLY TRUE WHEN SEEDINGS ARE MADE LATE IN THE PLANTING SEASON, IN ABNORMALLY DRY OR HOT SEASONS, OR ON ADVERSE SITES.

D. REPAIRS AND MAINTENANCE

INSPECT ALL SEEDED AREAS FOR FAILURES AND MAKE NECESSARY REPAIRS, REPLACEMENTS, AND RESEEDINGS WITHIN THE PLANTING SEASON.

i. ONCE THE VEGETATION IS ESTABLISHED, THE SITE SHALL HAVE 95% GROUNDCOVER TO BE CONSIDERED ADEQUATELY STABILIZED.

ii. IF THE STAND PROVIDES LESS THAN 40% GROUND COVERAGE, REESTABLISH FOLLOWING ORIGINAL LIME, FERTILIZER, SEEDBED PREPARATION AND SEEDING RECOMMENDATIONS.

iii. IF THE STAND PROVIDES BETWEEN 40% AND 94% GROUND COVERAGE, OVERSEEDING AND FERTILIZING USING HALF OF THE RATES ORIGINALLY APPLIED MAY BE NECESSARY.

iv. MAINTENANCE FERTILIZER RATES FOR PERMANENT SEEDING ARE SHOWN IN TABLE 24. FOR LAWNS AND OTHER MEDIUM TO HIGH MAINTENANCE TURFGRASS AREAS, REFER TO THE UNIVERSITY OF MARYLAND PUBLICATION "LAWN CARE IN MARYLAND" BULLITIN NO. 171.

RK&K
81 MOSHER STREET | BALTIMORE, MD 21217
PH: (410) 728-2900 FAX: (410) 728-3160
Engineers Construction Managers Planners Scientists
www.rkk.com

PHOENIX ENGINEERING, INC.
CONSULTING ENGINEERS
1420-A Joh Avenue
BALTIMORE, MARYLAND 21227
(410) 247-8833 FAX 247-9397

MARYLAND TRANSPORTATION AUTHORITY
Engineering Division

ADDENDUMS & REVISIONS			
NO.	DESCRIPTION	BY	DATE

I-95 FROM MORAVIA ROAD TO THE FORT McHENRY TUNNEL - PHASE 1 - SOUTHBOUND

I-95 (BALTIMORE CITY)

EROSION AND SEDIMENT CONTROL GENERAL NOTES

DESIGNED BY DRB	DRAWN BY VMS	CHECKED BY DRB
CONST. REVIEW BY -	DATE DECEMBER 2009	SCALE AS SHOWN

CONTRACT NO. FT 928-000-006

DRAWING NO. ED–3 of 5

SHEET NO. 59 OF 188

STANDARDS AND SPECIFICATIONS FOR VEGETATIVE STABILIZATION (CONTINUED)

PERMANENT SEEDING SUMMARY

SEED MIXTURE (FOR HARDINESS ZONE 7A) (FROM TABLE 25)					FERTILIZER RATE (10–20–20)			LIME RATE
MIX	SPECIES	APPLICATION RATE (LBS /ACRE)	SEEDING DATES	SEEDING DEPTHS	N	P205	K20	
1	75% TALL FESCUE 10% CANADA BLUEGRASS 10% KENTUCKY BLUEGRASS 5% RED TOP	150	3 /1 TO 5 /15 8 /5 TO 11 /15	1"	90 LB /AC (2.0 LB / 1000 SF)	175 LB /AC (4.0 LB / 1000 SF)	175 LB /AC (4.0 LB / 1000 SF)	2 TON /AC (100 LB / 1000 SF)
7	83% TALL FESCUE 83% TALL FESCUE 83% TALL FESCUE	10 3 20	3 /1 TO 5 /15 5 /16 TO 8 /14 8 /15 TO 11 /15	1'				

TEMPORARY SEEDING SUMMARY

SEED MIXTURE (FOR HARDINESS ZONE 7A) (FROM TABLE 25)					FERTILIZER RATE (10–20–20)	LIME RATE
MIX	SPECIES	APPLICATION RATE (LBS /ACRE)	SEEDING DATES	SEEDING DEPTHS		
–	RYE PLUS FOXTAIL MILLET	150	3 /1 TO 5 /15	1"	3 /1 TO 5 /15 (15 LB /1000 SF)	2 TONS /AC (100 LB /1000 SF)

SUPPLEMENTAL SYMBOLS

PORTABLE CONCRETE BARRIER DIVERSION
SANDBAG DIVERSION
SUPER DIVERSION FENCE — DF–1 DF–2 DF
TEMPORARY GABION OUTLET STRUCTURE — TGOS
ORANGE CONSTRUCTION FENCE — OCF
SHEETING
CURRENT MAINTENANCE OF TRAFFIC WORK AREA
CURRENT MAINTENANCE OF TRAFFIC ASPHALT WEDGING
ONGOING MAINTENANCE OF TRAFFIC WORK AREA
PAVEMENT REMOVAL
WATERS OF THE U.S. — WUS
WETLANDS
WETLAND BUFFER — B B
100–YEAR FLOODPLAIN
SEDIMENT BASIN BAFFLES

STANDARD SYMBOLS

EARTH DIKE — A–2
TEMPORARY SWALE — A–2
PERIMETER DIKE /SWALE — PD /S–1
STONE CHECK DAM — CD
TEMPORARY STONE OUTLET STRUCTURE — TSOS
SILT FENCE — SF
SUPER SILT FENCE — SSF
STRAW BALES — SBD
STANDARD INLET PROTECTION — SIP
AT GRADE INLET PROTECTION — AGIP
CURB INLET PROTECTION — CIP
MEDIAN INLET PROTECTION — MIP
GABION INFLOW PROTECTION — GM
RIP RAP INFLOW PROTECTION — RRP
SUMP PIT — SP
REMOVABLE PUMPING STATION — RPS
PORTABLE SEDIMENT TANK — PST

STANDARD SYMBOLS

TEMPORARY BERM — TB
PIPE SLOPE DRAIN — PSD – 12
STABILIZED CONSTRUCTION ENTRANCE — SCE
SOIL STABILIZATION MATTING
PLACED RIPRAP DITCH
GABIONS
CONCRETE GUTTER
STONE OUTLET SEDIMENT TRAP — SOST
RIPRAP OUTLET SEDIMENT TRAP — ROST
STONE /RIPRAP OUTLET SEDIMENT TRAP — SROST
PIPE OUTLET SEDIMENT TRAP — POST
LIMIT OF DISTURBANCE — LOD
EXISTING CONTOURS — 100
PROPOSED CONTOURS — 100

SEQUENCE OF CONSTRUCTION

1. THE CONTRACTOR SHALL REVIEW THE EROSION AND SEDIMENT CONTROL PLANS AND FAMILIARIZE THEMSELF WITH THE METHODS REQUIRED FOR IMPLEMENTING THE PLANS.

2. THE CONTRACTOR SHALL CONTACT THE MARYLAND DEPARTMENT OF THE ENVIRONMENT'S (MDE) WATER MANAGEMENT ADMINISTRATION (WMA) AT (410)–537–3510 A MINIMUM OF SEVEN (7) DAYS PRIOR TO ANY EARTH DISTURBANCE TO SET UP A PRE– CONSTRUCTION MEETING BETWEEN PROJECT REPRESENTATIVES AND REPRESENTATIVES OF WMA.

3. STAGING/STOCKPILE/STORAGE AREAS HAVE NOT BEEN IDENTIFIED WITHIN THE PROJECT LIMITS BEYOND THE AREAS OF CONSTRUCTION. THE CONTRACTOR SHALL SUBMIT AND OBTAIN APPROVAL OF A SEDIMENT AND EROSION CONTROL PLAN FOR STAGING/STOCKPILE/STORAGE AREAS PRIOR TO SCHEDULING THE PRE– CONSTRUCTION MEETING. FOR STAGING/STOCKPILE/STORAGE AREAS LOCATED WITHIN STATE OR FEDERAL PROPERTY, THE APPROVAL SHALL BE OBTAINED FROM MDE–WMA. FOR STAGING/STOCKPILE/STORAGE AREAS LOCATED OUTSIDE STATE OR FEDERAL PROPERTY, THE APPROVAL SHALL BE OBTAINED FROM THE LOCAL JURISDICTION. LOCAL PERMIT NUMBERS SHALL BE PROVIDED TO MDE AT THE PER– CONSTRUCTION MEETING.

4. IT IS THE CONTRACTOR'S RESPONSIBILITY TO PROVIDE POSITIVE DRAINAGE TO ALL EROSION AND SEDIMENT CONTROL DEVICES. SEDIMENT LADEN RUNOFF FROM DISTURBED AREAS SHALL NOT BE ALLOWED TO BYPASS THE EROSION AND SEDIMENT DEVICES. THE CONTRACTOR IS RESPONSIBLE FOR MAINTAINING ALL EROSION AND SEDIMENT CONTROL DEVICES THROUGHOUT THE DURATION OF THE PROJECT.

5. THE STABILIZED CONSTRUCTION ENTRANCE (SCE) LOCATIONS SHOWN ARE FOR INFORMATIONAL PURPOSES ONLY. THE ACTUAL LOCATION SHALL BE DETERMINED IN THE FIELD BY THE ENGINEER, THE CONTRACTOR AND THE MARYLAND DEPARTMENT OF THE ENVIRONMENT'S WATER MANAGEMENT ADMINISTRATION INSPECTOR. IT IS ASSUMED THAT THE SCE WILL BE RELOCATED ONCE DURING CONSTRUCTION TO ACCOMMODATE GROUND OPERATIONS.

6. STABILIZE ALL DISTURBED AREAS NOT DRAINING TO A SEDIMENT CONTROL DEVICE AT THE END OF EACH WORK DAY.
   A. STABILIZE AREAS EXCAVATED FOR UNDER DRAIN WITH #57 STONE OR 4" TOPSOIL, SEED AND TYPE B SOIL STABILIZATION MATTING.
   B. STABILIZE SLOPES WITH 4" TOPSOIL, SEED AND TYPE B SOIL STABILIZATION MATTING.

7. STAGE 1 – CLEAR AND GRUB AND INSTALL ALL SEDIMENT CONTROL DEVICES AROUND BIORETENTION FACILITY BMP NO. FT0004 AS SHOWN ON THE PLANS, INCLUDING ORANGE BLAZE FENCE AT LOD STAKE OUTS, STABILIZED CONSTRUCTION ENTRANCE 1–1, AT GRADE INLET PROTECTION 1–1 AND SILT FENCE. AFTER THE SEDIMENT CONTROL DEVICES HAVE BEEN INSTALLED, THE CONTRACTOR SHALL CLEAR AND GRUB REMAINING AREAS INSIDE THIS LOD. SEE ES–1 of 21.

8. STAGE 1 – CLEAR AND GRUB AND INSTALL ALL SEDIMENT CONTROL DEVICES AROUND PEDESTRIAN RAMP AND ENTRANCE AS SHOWN ON THE PLANS, INCLUDING ORANGE BLAZE FENCE AT LOD STAKE OUTS AND STABILIZED CONSTRUCTION ENTRANCE 2–1. AFTER THE SEDIMENT CONTROL DEVICES HAVE BEEN INSTALLED, THE CONTRACTOR SHALL CLEAR AND GRUB REMAINING AREAS INSIDE THIS LOD. SEE ES–2 of 21

9. STAGE 1– AFTER STAGE 1 ROADWAY HAS BEEN EXCAVATED AND INLETS INSTALLED, INSTALL PORTABLE SEDIMENT TANK 2–1, REMOVABLE PUMPING STATION 2–1, AT GRADE INLET PROTECTION 2–1 AND 2–2. INSTALL PORTABLE SEDIMENT TANK 5–1, REMOVABLE PUMPING STATION 5–1, AT GRADE INLET PROTECTION 5–1 AND 5–2. INSTALL PORTABLE SEDIMENT TANK 6–1, REMOVABLE PUMPING STATION 6–1, AT GRADE INLET PROTECTION 6–1 AND 6–2. INSTALL AT GRADE INLET PROTECTION 7–1.

10. STAGE 1– EXCAVATE EXISTING AND PROPOSED BOTTOMS AND SLOPES FOR AND AROUND BIORETENTION FACILITY BMP NO. FT0004 AS SPECIFIED ON THE PLANS. INSTALL ENDWALL 1, 6" UNDERDRAIN AND RELATED PIPE. INSTALL DIVERSION INLET 1–1. NO DISTURBED AREA SHALL BE LEFT UNSTABILIZED OVERNIGHT UNLESS THE RUNOFF IS DIRECTED TO AN APPROVED SEDIMENT DEVICE.

11. STAGE 2– AFTER STAGE 2 ROADWAY HAS BEEN EXCAVATED AND INLETS INSTALLED, INSTALL PORTABLE SEDIMENT TANK 8–1, REMOVABLE PUMPING STATION 8–1, AT GRADE INLET PROTECTION 8–1, 8–2, 8–3 AND 8–4. INSTALL PORTABLE SEDIMENT TANK 11–1, REMOVABLE PUMPING STATION 11–1, AT GRADE INLET PROTECTION 11–1 AND 11–2. INSTALL PORTABLE SEDIMENT TANK 12–1, REMOVABLE PUMPING STATION 12–1 AND AT GRADE INLET PROTECTION 12–1.

12. STAGE 3– AFTER STAGE 3 ROADWAY HAS BEEN EXCAVATED, INSTALL PORTABLE SEDIMENT TANK 15–1 AND REMOVABLE PUMPING STATION 15–1.

13. STAGE 4– AFTER STAGE 4 ROADWAY HAS BEEN EXCAVATED, INSTALL PORTABLE SEDIMENT TANK 19–1 AND REMOVABLE PUMPING STATION 19–1.

14. UPON COMPLETION OF THE SLOPE EXCAVATION AND RELATED WORK, REMOVE THE STABILIZED CONSTRUCTION ENTRANCE AND STABILIZE ANY AREAS WITHIN THE LOD DISTURBED DURING CONSTRUCTION.

15. AFTER ALL CONTRIBUTING AREAS HAVE BEEN STABILIZED AND WITH THE PERMISSION OF THE WMA INSPECTOR, THE REMAINING EROSION AND SEDIMENT CONTROL DEVICES MAY BE REMOVED. PROVIDE FINAL STABILIZATION ON ALL AREAS DISTURBED BY THE EROSION AND SEDIMENT CONTROL DEVICE REMOVAL.

RK&K
81 MOSHER STREET | BALTIMORE, MD 21217
PH: (410) 728-2900 FAX: (410) 728-3160
Engineers Construction Managers Planners Scientists
www.rkk.com

PHOENIX ENGINEERING, INC.
CONSULTING ENGINEERS
1420–A Job Avenue
BALTIMORE, MARYLAND 21227
(410) 247–8833 FAX 247–9397

MARYLAND TRANSPORTATION AUTHORITY
Engineering Division

ADDENDUMS & REVISIONS			
NO.	DESCRIPTION	BY	DATE

I-95 FROM MORAVIA ROAD TO THE FORT McHENRY TUNNEL - PHASE 1 - SOUTHBOUND
I-95 (BALTIMORE CITY)
EROSION AND SEDIMENT CONTROL GENERAL NOTES

DESIGNED BY DRB	DRAWN BY VMS	CHECKED BY DRB
CONST. REVIEW BY –	DATE DECEMBER 2009	SCALE AS SHOWN

CONTRACT NO. FT 928-000-006
DRAWING NO. ED–4 of 5
SHEET NO. 60 OF 188

DETAIL 22 – SILT FENCE

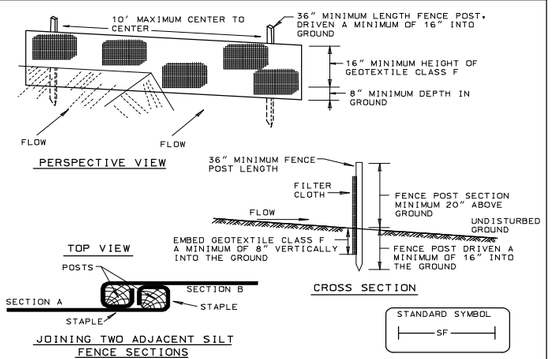

Construction Specifications

1. Fence posts shall be a minimum of 36" long driven 16" minimum into the ground. Wood posts shall be 1½" x 1½" square (minimum) cut, or 1¾" diameter (minimum) round and shall be of sound quality hardwood. Steel posts will be standard T or U section weighting not less than 1.00 pond per linear foot.

2. Geotextile shall be fastened securely to each fence post with wire ties or staples at top and mid-section and shall meet the following requirements for Geotextile Class F:

Tensile Strength	50 lbs/in (min.)	Test: MSMT 509
Tensile Modulus	20 lbs/in (min.)	Test: MSMT 509
Flow Rate	0.3 gal ft²/ minute (max.)	Test: MSMT 322
Filtering Efficiency	75% (min.)	Test: MSMT 322

3. Where ends of geotextile fabric come together, they shall be overlapped, folded and stapled to prevent sediment bypass.

4. Silt Fence shall be inspected after each rainfall event and maintained when bulges occur or when sediment accumulation reached 50% of the fabric height.

U.S. DEPARTMENT OF AGRICULTURE SOIL CONSERVATION SERVICE	PAGE E – 15 – 3	MARYLAND DEPARTMENT OF ENVIRONMENT WATER MANAGEMENT ADMINISTRATION

DETAIL 23B - AT GRADE INLET PROTECTION

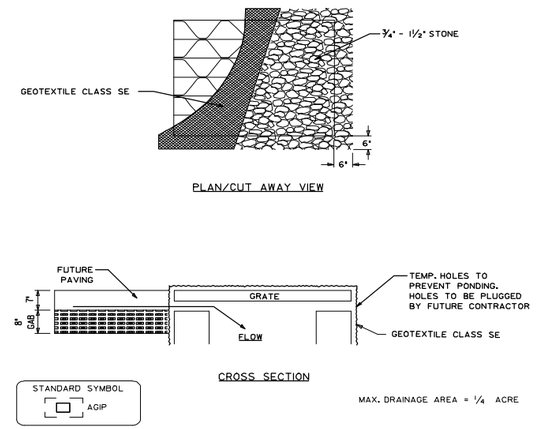

CONSTRUCTION SPECIFICATIONS:

1. WRAP GRATE AND UPPER PORTION OF INLET STRUCTURE WITH GEOTEXTILE CLASS SE TO COMPLETELY COVER ALL OPENINGS. THEN SET GRATE BACK IN PLACE.

2. PLACE ¾" TO 1½" STONE, 4" TO 6" THICK ON TOP OF THE GRATE TO SECURE THE FABRIC AND PROVIDE ADDITIONAL FILTRATION.

U.S. DEPARTMENT OF AGRICULTURE SOIL CONSERVATION SERVICE	PAGE E – 15 – 5A	MARYLAND DEPARTMENT OF ENVIRONMENT WATER MANAGEMENT ADMINISTRATION

DETAIL 20A – REMOVABLE PUMPING STATION

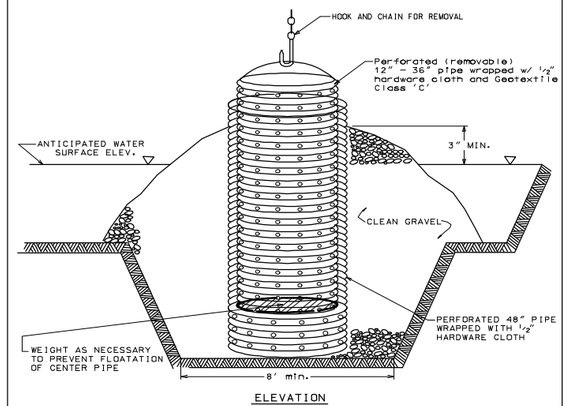

Construction Specifications

1. The outer pipe should be 48" dia. or small, in any case, be at least 4" greater in diameter than the center pipe. The outer pipe shall be wrapped with ½" hardware cloth to prevent backfill material from entering the perforations.

2. After installing the outer pipe, backfill around outer pipe with 2" aggregate or clean gravel.

3. The inside stand pipe (center pipe) should be constructed by perforating a corrugated or PVC pipe between 12" and 36" in diameter. The perforations shall be ½" X 6" slits or 1" diameter holes 6" on center. The center pipe shall be wrapped with ½" hardware cloth first, then wrapped again with Geotextile Class C.

4. The center pipe should extend 12" to 18" above the anticipated water surface elevation or riser crest elevation when dewatering a basin.

U.S. DEPARTMENT OF AGRICULTURE SOIL CONSERVATION SERVICE	PAGE D – 13 – 4	MARYLAND DEPARTMENT OF ENVIRONMENT WATER MANAGEMENT ADMINISTRATION

SILT FENCE

Silt Fence Design Criteria

Slope Steepness	(Maximum) Slope Length	(Maximum) Silt Fence Length
Flatter than 50:1	unlimited	unlimited
50:1 to 10:1	125 feet	1,000 feet
10:1 to 5:1	100 feet	750 feet
5:1 to 3:1	60 feet	500 feet
3:1 to 2:1	40 feet	250 feet
2:1 and steeper	20 feet	125 feet

Note: In areas of less than 2% slope and sandy soils (USDA general classification system, soil Class A) maximum slope length and silt fence length will be unlimited. In these areas a silt fence may be the only perimeter control required.

U.S. DEPARTMENT OF AGRICULTURE SOIL CONSERVATION SERVICE	PAGE E – 15 – 2A	MARYLAND DEPARTMENT OF ENVIRONMENT WATER MANAGEMENT ADMINISTRATION

DETAIL 24 – STABILIZED CONSTRUCTION ENTRANCE

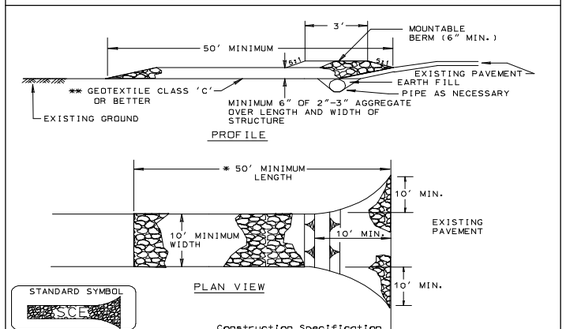

Construction Specification

1. Length – minimum of 50' (*30' for single residence lot).

2. Width – 10' minimum, should be flared at the existing road to provide a turning radius.

3. Geotextile fabric (filter cloth) shall be placed over the existing ground prior to placing stone. **The plan approval authority may not require single family residences to use geotextile.

4. Stone – crushed aggregate (2" to 3") or reclaimed or recycled concrete equivalent shall be placed at least 6" deep over the length and width of the entrance.

5. Surface Water – all surface water flowing to or diverted toward construction entrances shall be piped through the entrance, maintaining positive drainage. Pipe installed through the stabilized construction entrance shall be protected with a mountable berm with 5:1 slopes and a minimum of 6" of stone over the pipe. Pipe has to be sized according to the drainage. When the SCE is located at a high spot and has no drainage to convey a pipe will not be necessary. Pipe should be sized according to the amount of runoff to be conveyed. A 6" minimum will be required.

6. Location – A stabilized construction entrance shall be located at every point where construction traffic enters or leaves a construction site. Vehicles leaving the site must travel over the entire length of the stabilized construction entrance.

U.S. DEPARTMENT OF AGRICULTURE SOIL CONSERVATION SERVICE	PAGE F – 17 – 3	MARYLAND DEPARTMENT OF ENVIRONMENT WATER MANAGEMENT ADMINISTRATION

DETAIL 21 – PORTABLE SEDIMENT TANK

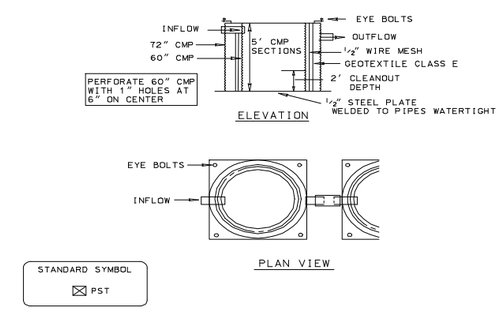

Construction Specifications

1. The following formula should be used in determining the storage volume of the sediment tank: 1 cubic foot of storage for each gallon per minute of pump discharge capacity.

2. An example of a typical sediment tank is shown above. Other container designs can be used if the storage volume is adequate and approval is obtained from the local approving agency.

3. Tanks may be connected in series.

U.S. DEPARTMENT OF AGRICULTURE SOIL CONSERVATION SERVICE	PAGE D – 14 – 2	MARYLAND DEPARTMENT OF ENVIRONMENT WATER MANAGEMENT ADMINISTRATION

RK&K
81 MOSHER STREET | BALTIMORE, MD 21217
PH: (410) 728-2900 FAX: (410) 728-2160
Engineers Construction Managers Planners Scientists
www.rkk.com

PHOENIX ENGINEERING, INC.
CONSULTING ENGINEERS
1420-A Joh Avenue
BALTIMORE, MARYLAND 21227
(410) 247-8633 FAX 247-9397

MARYLAND TRANSPORTATION AUTHORITY
Engineering Division

ADDENDUMS & REVISIONS

NO.	DESCRIPTION	BY	DATE

I-95 FROM MORAVIA ROAD TO THE FORT McHENRY TUNNEL - PHASE 1 - SOUTHBOUND

I-95 (BALTIMORE CITY)

EROSION & SEDIMENT CONTROL DETAILS

DESIGNED BY DRB	DRAWN BY VMS	CHECKED BY DRB	
CONST. REVIEW BY -	DATE DECEMBER 2009	SCALE AS SHOWN	

CONTRACT NO. FT 928-000-006

DRAWING NO. **ED–5 of 5**

SHEET NO. 61 OF 188

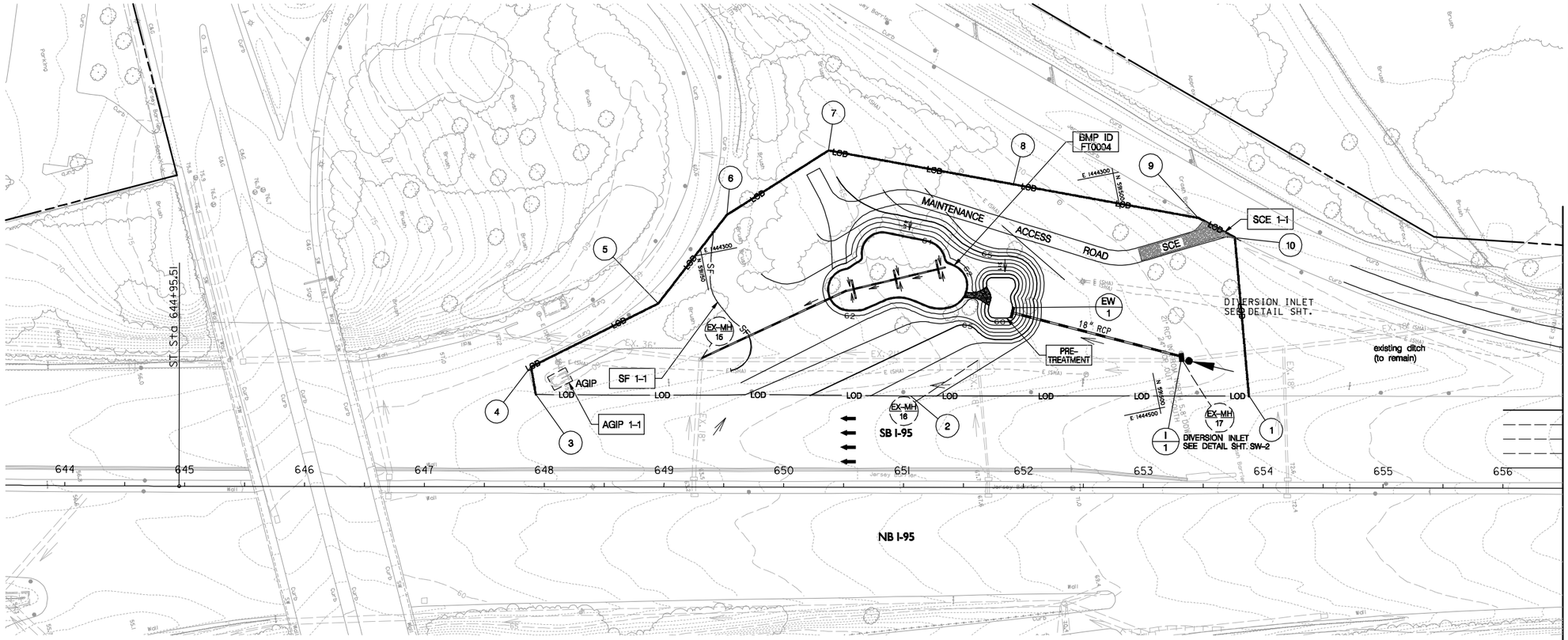

MATCH LINE STA. 656+50 SEE SHEET ES-2

STABILIZED CONSTRUCTION ENTRANCE				
LABEL	STATION	OFFSET	BASELINE	QNTY
SCE 1-1	653+31 to 653+68	176 to 213 LT	I-95 BL 01	45 TN

AT GRADE INLET PROTECTION				
LABEL	STATION	OFFSET	BASELINE	QNTY
AGIP 1-1	648+13	90 LT	I-95 BL 01	1

SILT FENCE				
LABEL	STATION	OFFSET	BASELINE	QNTY
SF 1-1	649+42 to 649+67	213 to 132 LT	I-95 BL 01	92 L.F.

LIMIT OF DISTURBANCE		
NO.	STATION	OFFSET
1	653+88	76 LT
2	651+06	76 LT
3	647+93	77 LT
4	647+89	100 LT
5	648+95	153 LT
6	649+52	227 LT
7	650+37	281 LT
8	651+91	253 LT
9	653+46	225 LT
10	653+76	209 LT

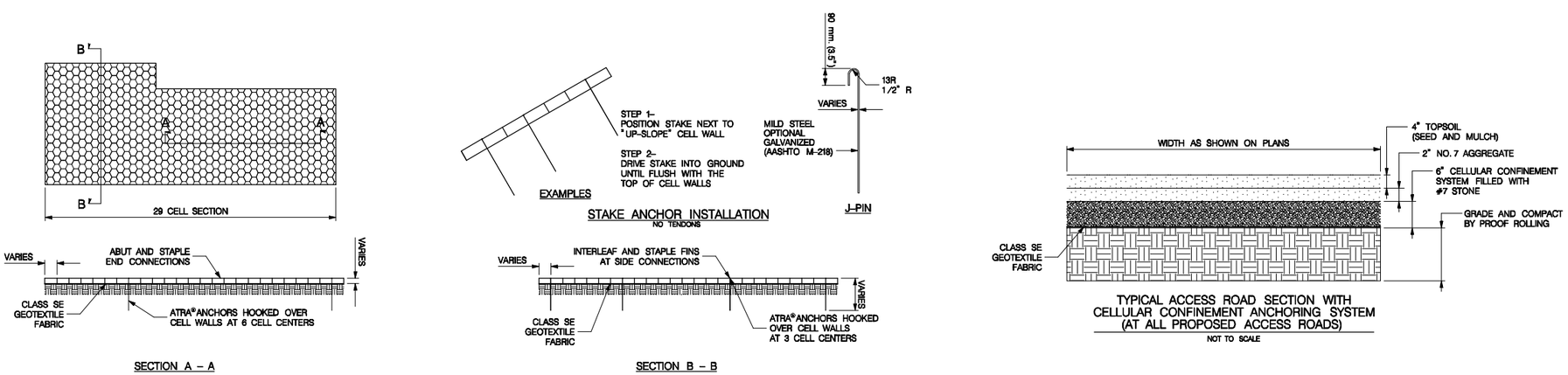

NOTES:

1. ANY DISTURBED AREA NOT DRAINING TO A SUITABLE SEDIMENT TRAPPING DEVICE MUST BE STABILIZED AT THE END OF EACH WORKING DAY. SUITABLE STABILIZATION METHODS INCLUDE: SEED AND MULCH, STONE, IMPERVIOUS SHEETING PROPERLY SECURED BY SANDBAGS OR STONES. NO SEPARATE PAYMENT IS PROVIDED FOR THIS ACTIVITY.
2. FOR (FT0004) BIO-RETENTION FACILITY DETAILS, SEE SW-1 AND SW-2.

STAGE 1

RK&K
81 MOSHER STREET | BALTIMORE, MD 21217
PH: (410) 728-2900 FAX: (410) 728-3160
Engineers Construction Managers Planners Scientists
www.rkk.com

PHOENIX ENGINEERING, INC.
CONSULTING ENGINEERS
1420-A Job Avenue
BALTIMORE, MARYLAND 21227
(410) 247-8833 FAX 247-9397

MARYLAND TRANSPORTATION AUTHORITY
Engineering Division

ADDENDUMS & REVISIONS			
NO.	DESCRIPTION	BY	DATE

I-95 FROM MORAVIA ROAD TO THE FORT McHENRY TUNNEL - PHASE 1 - SOUTHBOUND

I-95 (BALTIMORE CITY)

EROSION AND SEDIMENT CONTROL

DESIGNED BY DRB	DRAWN BY VMS	CHECKED BY DRB	
CONST. REVIEW BY -	DATE DECEMBER 2009	SCALE AS SHOWN	

CONTRACT NO. FT 928-000-006

DRAWING NO. **ES-1 of 21**

SHEET NO. 62 OF 188

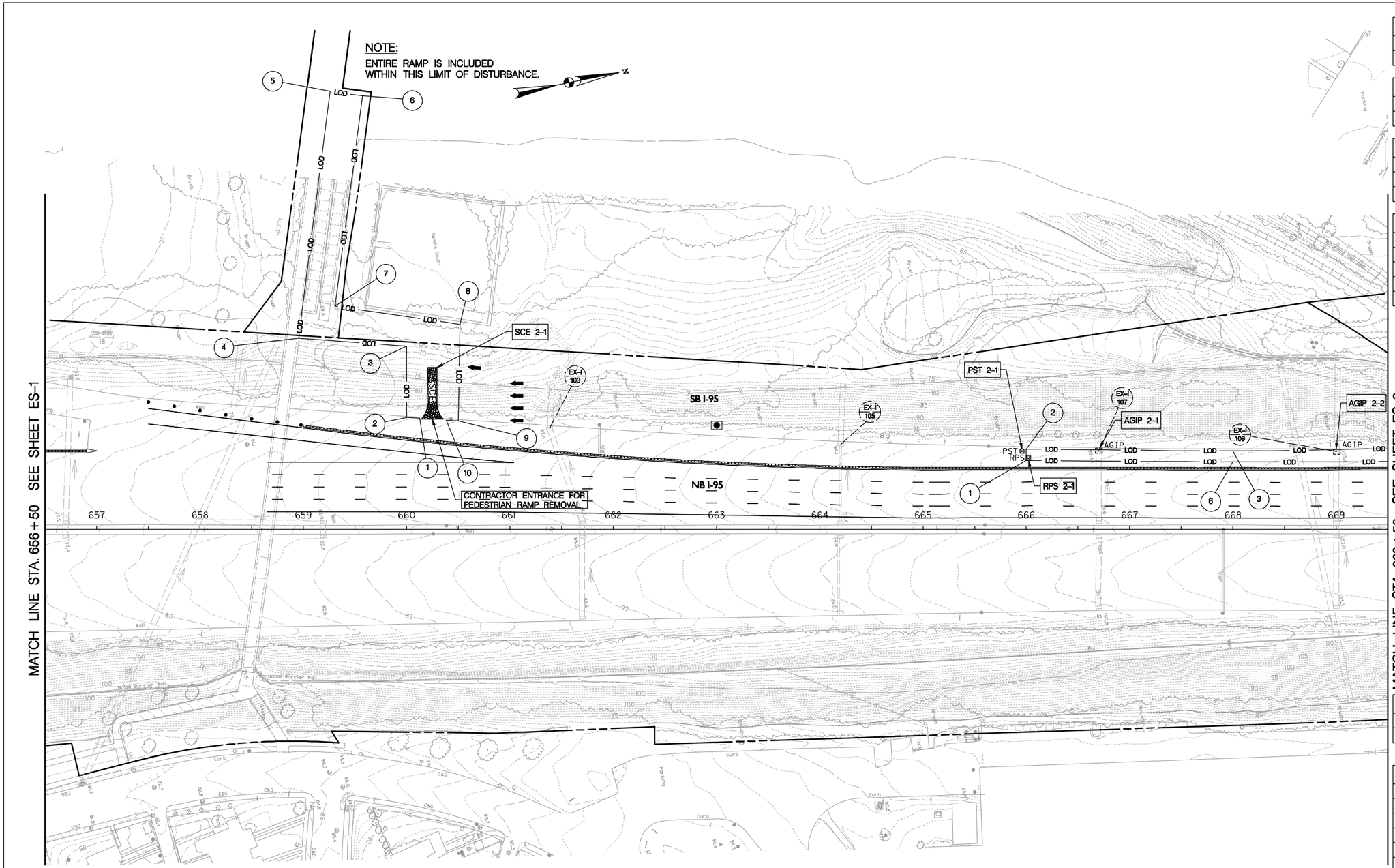

REMOVABLE PUMPING STATION				
LABEL	STATION	OFFSET	BASELINE	QNTY
RPS 2-1	666+02	69 LT	I-95 BL 01	1

PORTABLE SEDIMENT TANK				
LABEL	STATION	OFFSET	BASELINE	QNTY
PST 2-1	665+96	76 LT	I-95 BL 01	1

AT GRADE INLET PROTECTION				
LABEL	STATION	OFFSET	BASELINE	QNTY
AGIP 2-1	666+70	76 LT	I-95 BL 01	1
AGIP 2-2	669+00	75 LT	I-95 BL 01	1

LIMIT OF DISTURBANCE		
NO.	STATION	OFFSET
1	666+00	67 LT
2	666+00	78 LT
3	668+00	76 LT
6	668+00	66 LT

4 AND 5 ON NEXT SHEET

STABILIZED CONSTRUCTION ENTRANCE				
LABEL	STATION	OFFSET	BASELINE	QNTY
SCE 2-1	660+25	107 LT	I-95 BL 01	1

LIMIT OF DISTURBANCE		
NO.	STATION	OFFSET
1	660+13	108 LT
2	660+00	109 LT
3	660+00	177 LT
4	658+95	185 LT
5	659+26	424 LT
6	659+57	420 LT
7	659+31	216 LT
8	660+52	199 LT
9	660+50	105 LT
10	660+38	106 LT

NOTE:

ANY DISTURBED AREA NOT DRAINING TO A SUITABLE SEDIMENT TRAPPING DEVICE MUST BE STABILIZED AT THE END OF EACH WORKING DAY. SUITABLE STABILIZATION METHODS INCLUDE:
SEED AND MULCH, STONE, IMPERVIOUS SHEETING PROPERLY SECURED BY SANDBAGS OR STONES. NO SEPARATE PAYMENT IS PROVIDED FOR THIS ACTIVITY.

LEGEND

FULL DEPTH PAVING THIS PHASE

SCALE IN FEET

50 0 50 100

STAGE 1

RK&K
81 MOSHER STREET | BALTIMORE, MD 21217
PH: (410) 728-2900 FAX: (410) 728-3160
Engineers Construction Managers Planners Scientists
www.rkk.com

PHOENIX ENGINEERING, INC.
CONSULTING ENGINEERS
1420-A Joh Avenue
BALTIMORE, MARYLAND 21227
(410) 247-8833 FAX 247-9397

MARYLAND TRANSPORTATION AUTHORITY
Engineering Division

ADDENDUMS & REVISIONS			
NO.	DESCRIPTION	BY	DATE

I-95 FROM MORAVIA ROAD TO THE FORT McHENRY TUNNEL - PHASE 1 - SOUTHBOUND

I-95 (BALTIMORE CITY)

EROSION AND SEDIMENT CONTROL

DESIGNED BY DRB	DRAWN BY VMS	CHECKED BY DRB	
CONST. REVIEW BY -	DATE DECEMBER 2009	SCALE AS SHOWN	

CONTRACT NO. FT 928-000-006

DRAWING NO. **ES-2 of 21**

SHEET NO. 63 OF 188

LIMIT OF DISTURBANCE		
NO.	STATION	OFFSET
4	669+72	77 LT
5	669+82	66 LT

1, 2, 3 AND 6 ON PREVIOUS SHEET

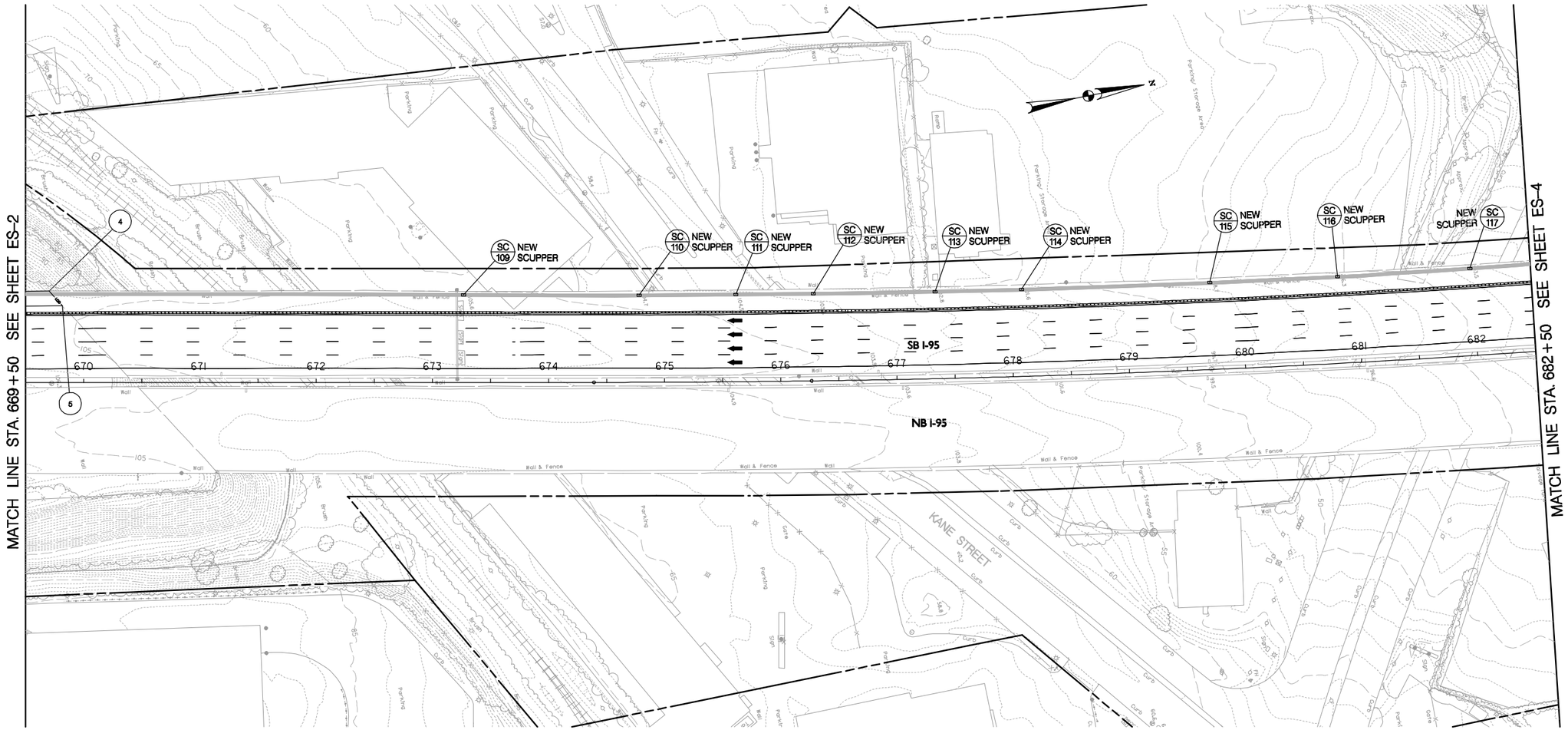

NOTE:

ANY DISTURBED AREA NOT DRAINING TO A SUITABLE SEDIMENT TRAPPING DEVICE MUST BE STABILIZED AT THE END OF EACH WORKING DAY. SUITABLE STABILIZATION METHODS INCLUDE:
SEED AND MULCH, STONE, IMPERVIOUS SHEETING PROPERLY SECURED BY SANDBAGS OR STONES. NO SEPARATE PAYMENT IS PROVIDED FOR THIS ACTIVITY.

LEGEND

FULL DEPTH PAVING THIS PHASE

SCALE IN FEET

50 0 50 100

STAGE 1

RK&K
81 MOSHER STREET | BALTIMORE, MD 21217
PH: (410) 728-2900 FAX: (410) 728-3160
Engineers Construction Managers Planners Scientists
www.rkk.com

PHOENIX ENGINEERING, INC.
CONSULTING ENGINEERS
1420-A Joh Avenue
BALTIMORE, MARYLAND 21227
(410) 247-8833 FAX 247-9397

MARYLAND TRANSPORTATION AUTHORITY
Engineering Division

ADDENDUMS & REVISIONS			
NO.	DESCRIPTION	BY	DATE

I-95 FROM MORAVIA ROAD TO THE FORT McHENRY TUNNEL - PHASE 1 - SOUTHBOUND

I-95 (BALTIMORE CITY)

EROSION AND SEDIMENT CONTROL

DESIGNED BY DRB	DRAWN BY VMS	CHECKED BY DRB	
CONST. REVIEW BY -	DATE DECEMBER 2009	SCALE AS SHOWN	

CONTRACT NO. FT 928-000-006

DRAWING NO. **ES-3 of 21**

SHEET NO. 64 OF 188

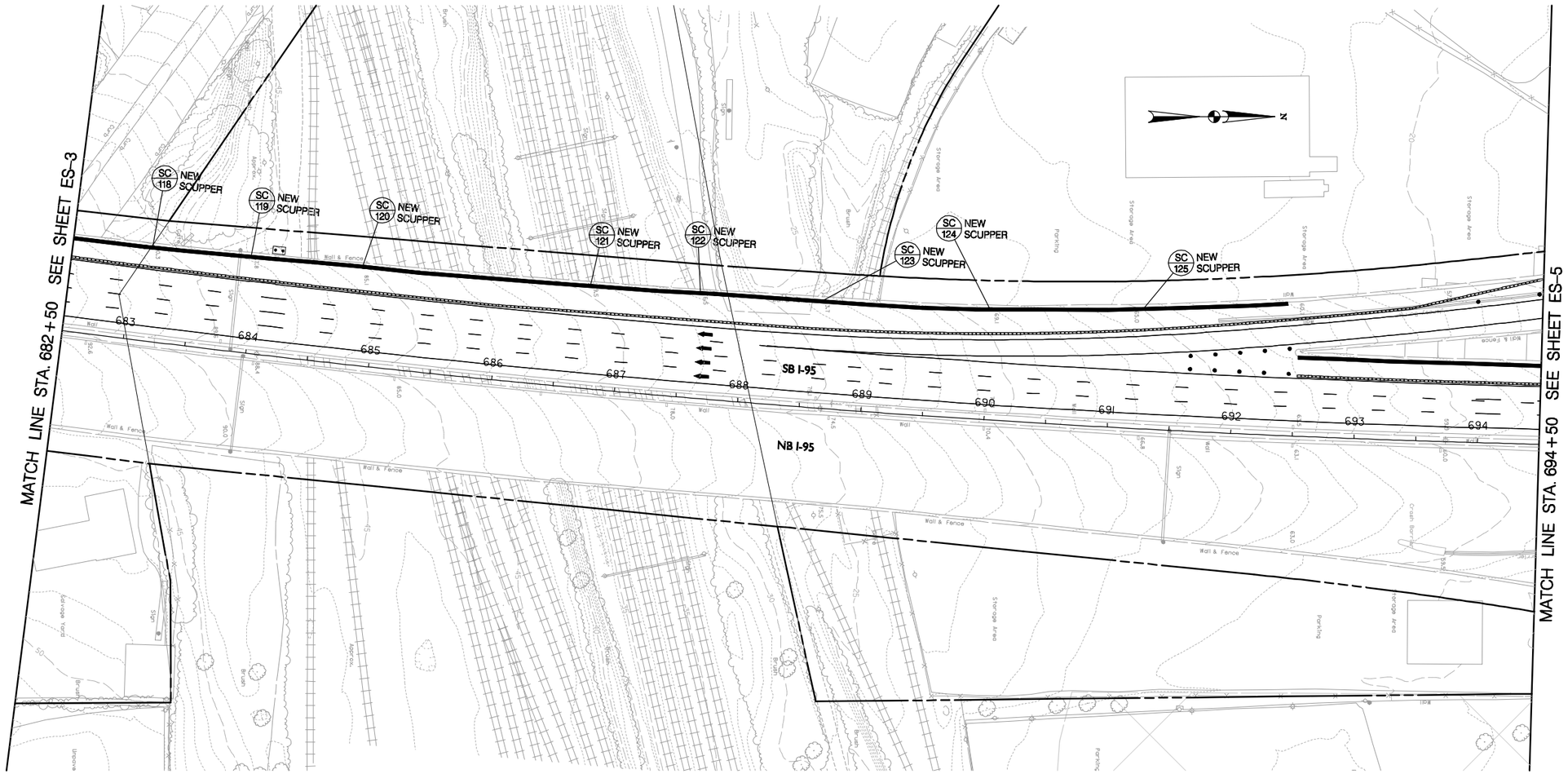

NOTE:

ANY DISTURBED AREA NOT DRAINING TO A SUITABLE SEDIMENT TRAPPING DEVICE MUST BE STABILIZED AT THE END OF EACH WORKING DAY. SUITABLE STABILIZATION METHODS INCLUDE:
SEED AND MULCH, STONE, IMPERVIOUS SHEETING PROPERLY SECURED BY SANDBAGS OR STONES. NO SEPARATE PAYMENT IS PROVIDED FOR THIS ACTIVITY.

SCALE IN FEET
50 0 50 100

STAGE 1

RK&K
81 MOSHER STREET | BALTIMORE, MD 21217
PH: (410) 728-2900 FAX: (410) 728-3160
Engineers Construction Managers Planners Scientists
www.rkk.com

PHOENIX ENGINEERING, INC.
CONSULTING ENGINEERS
1420-A Joh Avenue
BALTIMORE, MARYLAND 21227
(410) 247-8833 FAX 247-9397

MARYLAND TRANSPORTATION AUTHORITY
Engineering Division

ADDENDUMS & REVISIONS

NO.	DESCRIPTION	BY	DATE

I-95 FROM MORAVIA ROAD TO THE FORT McHENRY TUNNEL - PHASE 1 - SOUTHBOUND

I-95 (BALTIMORE CITY)

EROSION AND SEDIMENT CONTROL

DESIGNED BY DRB	DRAWN BY VMS	CHECKED BY DRB
CONST. REVIEW BY -	DATE DECEMBER 2009	SCALE AS SHOWN

CONTRACT NO. FT 928-000-006

DRAWING NO. **ES-4 of 21**

SHEET NO. 65 OF 188

REMOVABLE PUMPING STATION				
LABEL	STATION	OFFSET	BASELINE	QNTY
RPS 5-1	702+55	48 LT	I-95 BL 01	1

PORTABLE SEDIMENT TANK				
LABEL	STATION	OFFSET	BASELINE	QNTY
PST 5-1	702+49	54 LT	I-95 BL 01	1

AT GRADE INLET PROTECTION				
LABEL	STATION	OFFSET	BASELINE	QNTY
AGIP 5-1	702+95	63 LT	I-95 BL 01	1
AGIP 5-2	706+83	63 LT	I-95 BL 01	1

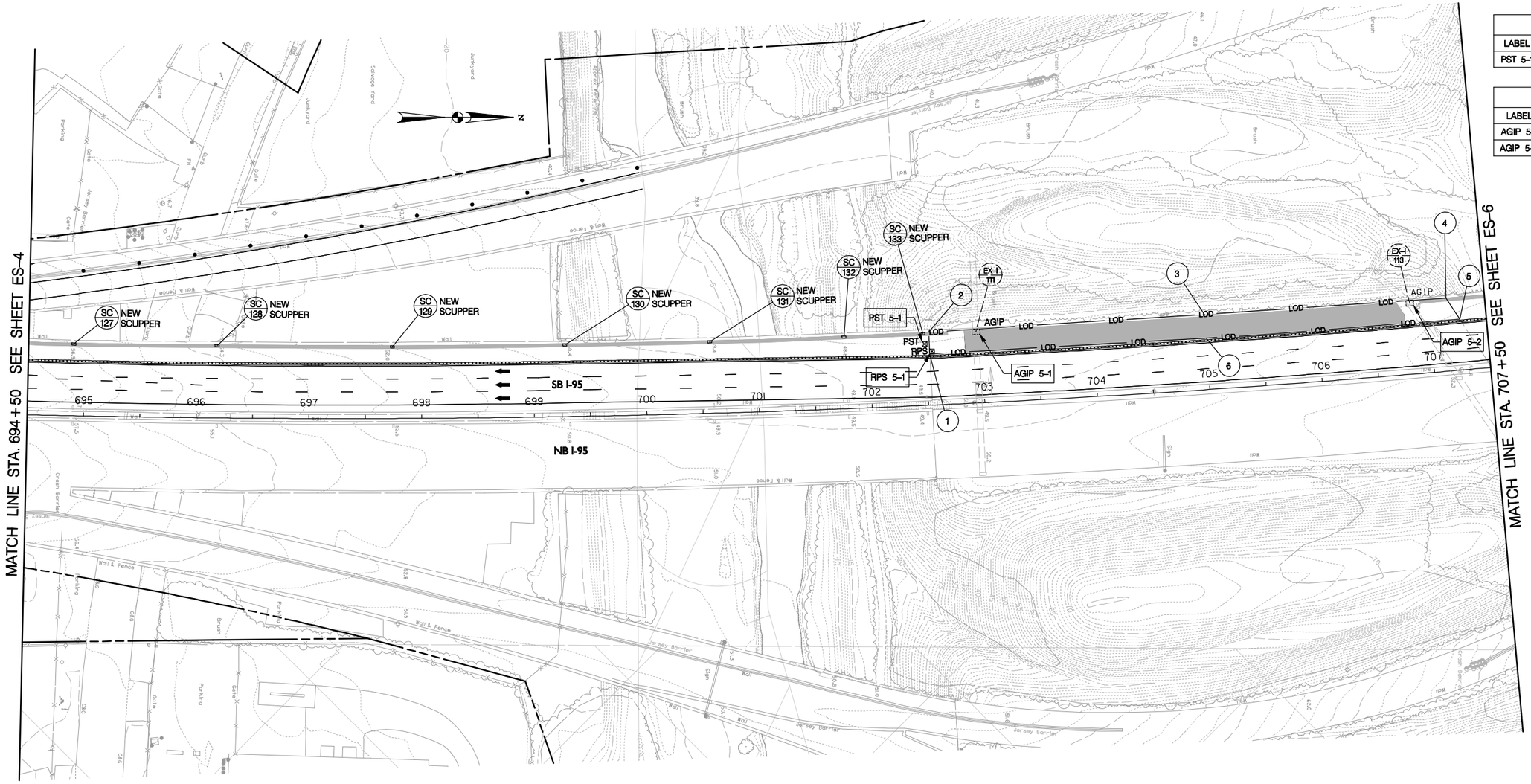

LIMIT OF DISTURBANCE		
NO.	STATION	OFFSET
1	702+53	46 LT
2	702+53	65 LT
3	705+00	66 LT
4	707+16	65 LT
5	707+26	45 LT
6	705+00	46 LT

NOTE:

ANY DISTURBED AREA NOT DRAINING TO A SUITABLE SEDIMENT TRAPPING DEVICE MUST BE STABILIZED AT THE END OF EACH WORKING DAY. SUITABLE STABILIZATION METHODS INCLUDE:
SEED AND MULCH, STONE, IMPERVIOUS SHEETING PROPERLY SECURED BY SANDBAGS OR STONES. NO SEPARATE PAYMENT IS PROVIDED FOR THIS ACTIVITY.

LEGEND

FULL DEPTH PAVING THIS PHASE

SCALE IN FEET

50 0 50 100

STAGE 1

RK&K
81 MOSHER STREET | BALTIMORE, MD 21217
PH: (410) 728-2900 FAX: (410) 728-3160
Engineers Construction Managers Planners Scientists
www.rkk.com

PHOENIX ENGINEERING, INC.
CONSULTING ENGINEERS
1420-A Joh Avenue
BALTIMORE, MARYLAND 21227
(410) 247-8833 FAX 247-9397

MARYLAND TRANSPORTATION AUTHORITY
Engineering Division

ADDENDUMS & REVISIONS			
NO.	DESCRIPTION	BY	DATE

I-95 FROM MORAVIA ROAD TO THE FORT McHENRY TUNNEL - PHASE 1 - SOUTHBOUND

I-95 (BALTIMORE CITY)

EROSION AND SEDIMENT CONTROL

DESIGNED BY DRB | DRAWN BY VMS | CHECKED BY DRB
CONST. REVIEW BY - | DATE DECEMBER 2009 | SCALE AS SHOWN

CONTRACT NO. FT 928-000-006

DRAWING NO. **ES-5 of 21**

SHEET NO. 66 OF 188

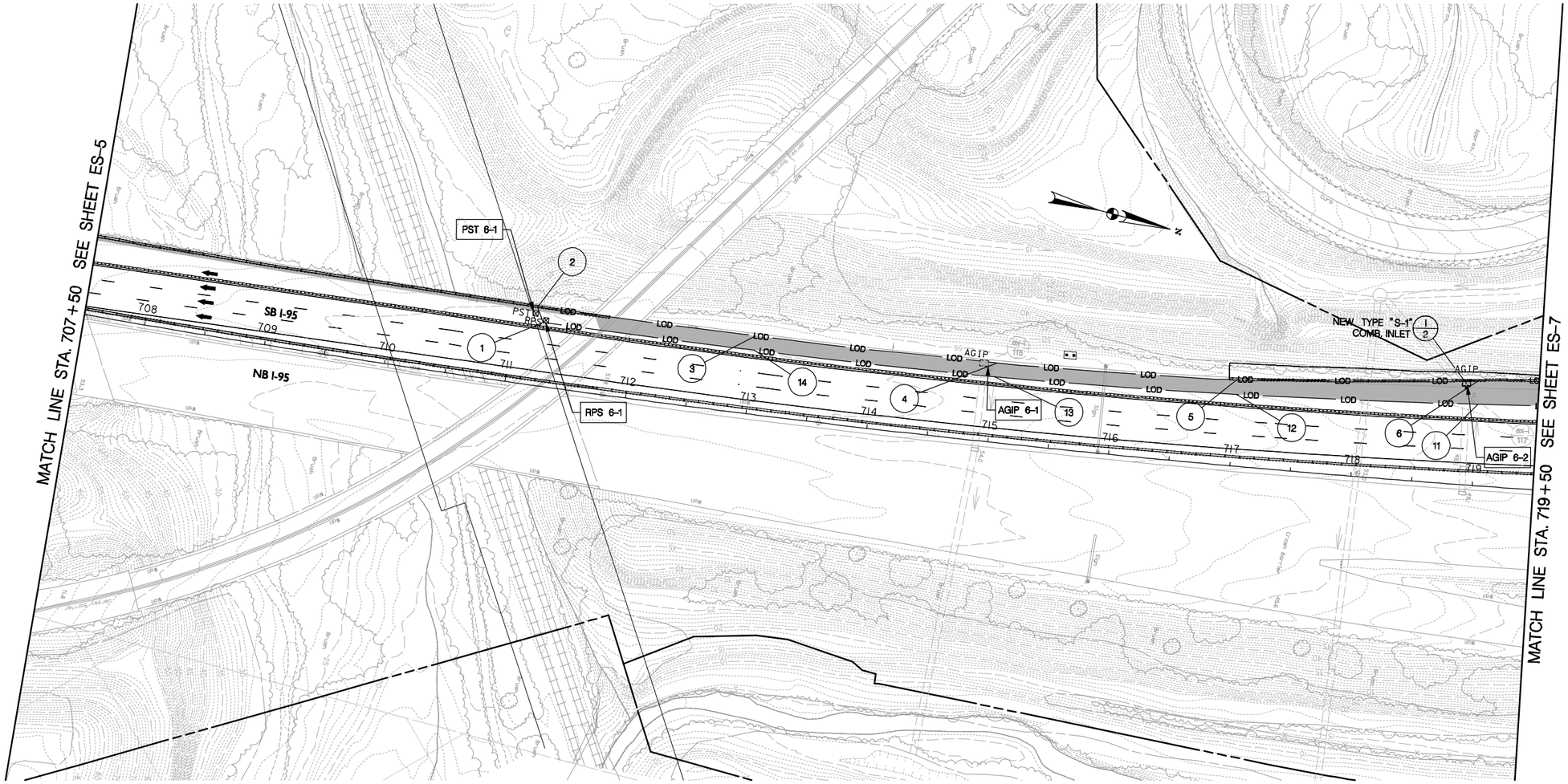

REMOVABLE PUMPING STATION				
LABEL	STATION	OFFSET	BASELINE	QNTY
RPS 6-1	711+27	54 LT	I-95 BL 01	1

PORTABLE SEDIMENT TANK				
LABEL	STATION	OFFSET	BASELINE	QNTY
PST 6-1	711+17	59 LT	I-95 BL 01	1

AT GRADE INLET PROTECTION				
LABEL	STATION	OFFSET	BASELINE	QNTY
AGIP 6-1	714+90	64 LT	I-95 BL 01	1
AGIP 6-2	718+89	84 LT	I-95 BL 01	1

LIMIT OF DISTURBANCE		
NO.	STATION	OFFSET
1	711+24	52 LT
2	711+18	64 LT
3	713+00	65 LT
4	715+00	65 LT
5	717+00	71 LT
6	719+00	87 LT
11	719+00	67 LT
12	717+00	59 LT
13	715+00	54 LT
14	713+00	53 LT

7, 8, 9 AND 10 ON NEXT SHEET

NOTE:

ANY DISTURBED AREA NOT DRAINING TO A SUITABLE SEDIMENT TRAPPING DEVICE MUST BE STABILIZED AT THE END OF EACH WORKING DAY. SUITABLE STABILIZATION METHODS INCLUDE:
SEED AND MULCH, STONE, IMPERVIOUS SHEETING PROPERLY SECURED BY SANDBAGS OR STONES. NO SEPARATE PAYMENT IS PROVIDED FOR THIS ACTIVITY.

LEGEND

FULL DEPTH PAVING THIS PHASE

SCALE IN FEET
50 0 50 100

STAGE 1

RK&K
81 MOSHER STREET | BALTIMORE, MD 21217
PH: (410) 728-2900 FAX: (410) 728-3160
Engineers Construction Managers Planners Scientists
www.rkk.com

PHOENIX ENGINEERING, INC.
CONSULTING ENGINEERS
1420-A Joh Avenue
BALTIMORE, MARYLAND 21227
(410) 247-8833 FAX 247-9397

MARYLAND TRANSPORTATION AUTHORITY
Engineering Division

ADDENDUMS & REVISIONS			
NO.	DESCRIPTION	BY	DATE

I-95 FROM MORAVIA ROAD TO THE FORT McHENRY TUNNEL - PHASE 1 - SOUTHBOUND
I-95 (BALTIMORE CITY)
EROSION AND SEDIMENT CONTROL

DESIGNED BY DRB	DRAWN BY VMS	CHECKED BY DRB	
CONST. REVIEW BY -	DATE DECEMBER 2009	SCALE AS SHOWN	

CONTRACT NO. FT 928-000-006
DRAWING NO. **ES-6 of 21**
SHEET NO. 67 OF 188

AT GRADE INLET PROTECTION				
LABEL	STATION	OFFSET	BASELINE	QNTY
AGIP 7-1	721+74	146 LT	I-95 BL 01	1

LIMIT OF DISTURBANCE		
NO.	STATION	OFFSET
7	721+00	97 LT
8	722+23	102 LT
9	722+33	84 LT
10	721+00	77 LT

1-6 AND 11-14 ON PREVIOUS SHEET

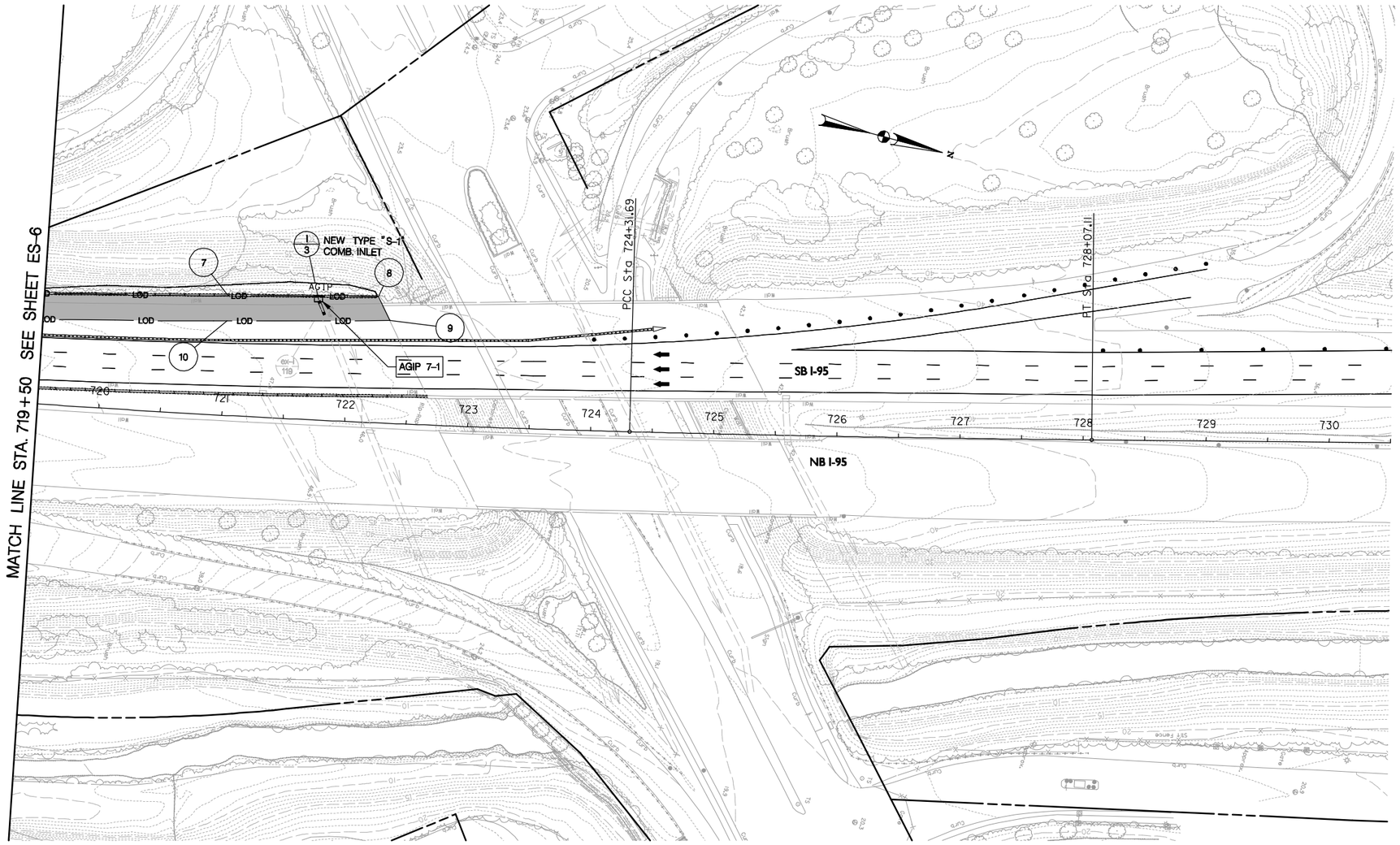

NOTE:

ANY DISTURBED AREA NOT DRAINING TO A SUITABLE SEDIMENT TRAPPING DEVICE MUST BE STABILIZED AT THE END OF EACH WORKING DAY. SUITABLE STABILIZATION METHODS INCLUDE:
SEED AND MULCH, STONE, IMPERVIOUS SHEETING PROPERLY SECURED BY SANDBAGS OR STONES. NO SEPARATE PAYMENT IS PROVIDED FOR THIS ACTIVITY.

LEGEND

FULL DEPTH PAVING THIS PHASE

SCALE IN FEET

50 0 50 100

STAGE 1

RK&K
81 MOSHER STREET | BALTIMORE, MD 21217
PH: (410) 728-2900 FAX: (410) 728-3160
Engineers Construction Managers Planners Scientists
www.rkk.com

PHOENIX ENGINEERING, INC.
CONSULTING ENGINEERS
1420-A Joh Avenue
BALTIMORE, MARYLAND 21227
(410) 247-8633 FAX 247-9397

MARYLAND TRANSPORTATION AUTHORITY
Engineering Division

ADDENDUMS & REVISIONS			
NO.	DESCRIPTION	BY	DATE

I-95 FROM MORAVIA ROAD TO THE FORT McHENRY TUNNEL - PHASE 1 - SOUTHBOUND

I-95 (BALTIMORE CITY)

EROSION AND SEDIMENT CONTROL

DESIGNED BY DRB | DRAWN BY VMS | CHECKED BY DRB
CONST. REVIEW BY - | DATE DECEMBER 2009 | SCALE AS SHOWN

CONTRACT NO. FT 928-000-006
DRAWING NO. ES-7 of 21
SHEET NO. 68 OF 188

LIMIT OF DISTURBANCE		
NO.	STATION	OFFSET
1	658+61	2 LT
2	658+61	23 LT
3	660+50	24 LT
4	662+50	24 LT
5	664+50	24 LT
6	666+50	24 LT

LIMIT OF DISTURBANCE		
NO.	STATION	OFFSET
7	668+50	24 LT
10	668+50	2 LT
11	666+50	2 LT
12	664+50	2 LT
13	662+50	2 LT
14	660+50	2 LT

8 AN9 ON NEXT SHEET

PORTABLE SEDIMENT TANK				
LABEL	STATION	OFFSET	BASELINE	QNTY
PST 8-1	659+88	16 LT	I-95 BL 01	1

REMOVABLE PUMPING STATION				
LABEL	STATION	OFFSET	BASELINE	QNTY
RPS 8-1	660+02	8 LT	I-95 BL 01	1

AT GRADE INLET PROTECTION				
LABEL	STATION	OFFSET	BASELINE	QNTY
AGIP 8-1	661+70	7 LT	I-95 BL 01	1
AGIP 8-2	664+20	7 LT	I-95 BL 01	1
AGIP 8-3	666+70	7 LT	I-95 BL 01	1
AGIP 8-4	669+00	7 LT	I-95 BL 01	1

NOTE:

ANY DISTURBED AREA NOT DRAINING TO A SUITABLE SEDIMENT TRAPPING DEVICE MUST BE STABILIZED AT THE END OF EACH WORKING DAY. SUITABLE STABILIZATION METHODS INCLUDE:
SEED AND MULCH, STONE, IMPERVIOUS SHEETING PROPERLY SECURED BY SANDBAGS OR STONES. NO SEPARATE PAYMENT IS PROVIDED FOR THIS ACTIVITY.

LEGEND

FULL DEPTH PAVING THIS PHASE

SCALE IN FEET

50 0 50 100

STAGE 2

RK&K
81 MOSHER STREET | BALTIMORE, MD 21217
PH: (410) 728-2900 FAX: (410) 728-3160
Engineers Construction Managers Planners Scientists
www.rkk.com

PHOENIX ENGINEERING, INC.
CONSULTING ENGINEERS
1420-A Joh Avenue
BALTIMORE, MARYLAND 21227
(410) 247-8633 FAX 247-9397

MARYLAND TRANSPORTATION AUTHORITY
Engineering Division

ADDENDUMS & REVISIONS			
NO.	DESCRIPTION	BY	DATE

I-95 FROM MORAVIA ROAD TO THE FORT McHENRY TUNNEL - PHASE 1 - SOUTHBOUND

I-95 (BALTIMORE CITY)

EROSION AND SEDIMENT CONTROL

DESIGNED BY DRB	DRAWN BY VMS	CHECKED BY DRB
CONST. REVIEW BY -	DATE DECEMBER 2009	SCALE AS SHOWN

CONTRACT NO. FT 928-000-006

DRAWING NO. **ES-8 of 21**

SHEET NO. 69 OF 188

LIMIT OF DISTURBANCE		
NO.	STATION	OFFSET
8	670+20	24 LT
9	670+43	2 LT

1–7 AND 10–14 ON PREVIOUS SHEET

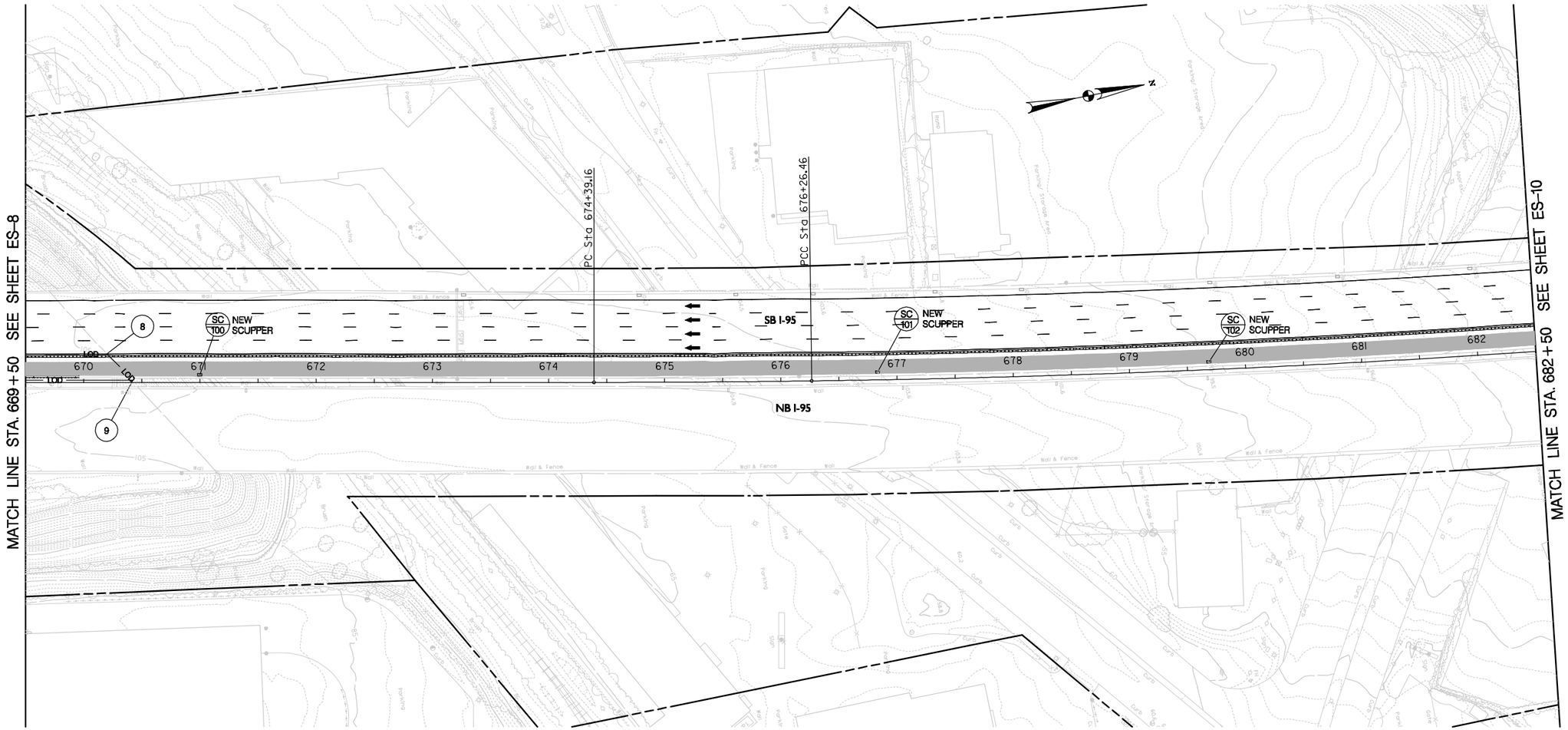

NOTE:

ANY DISTURBED AREA NOT DRAINING TO A SUITABLE SEDIMENT TRAPPING DEVICE MUST BE STABILIZED AT THE END OF EACH WORKING DAY. SUITABLE STABILIZATION METHODS INCLUDE:
SEED AND MULCH, STONE, IMPERVIOUS SHEETING PROPERLY SECURED BY SANDBAGS OR STONES. NO SEPARATE PAYMENT IS PROVIDED FOR THIS ACTIVITY.

LEGEND

CONCRETE OVERLAY

FULL DEPTH PAVING THIS PHASE

SCALE IN FEET

50 0 50 100

STAGE 2

RK&K
81 MOSHER STREET | BALTIMORE, MD 21217
PH: (410) 728-2900 FAX: (410) 728-3160
Engineers Construction Managers Planners Scientists
www.rkk.com

PHOENIX ENGINEERING, INC.
CONSULTING ENGINEERS
1420-A Joh Avenue
BALTIMORE, MARYLAND 21227
(410) 247-8833 FAX 247-9397

MARYLAND TRANSPORTATION AUTHORITY
Engineering Division

ADDENDUMS & REVISIONS			
NO.	DESCRIPTION	BY	DATE

I-95 FROM MORAVIA ROAD TO THE FORT McHENRY TUNNEL - PHASE 1 - SOUTHBOUND

I-95 (BALTIMORE CITY)

EROSION AND SEDIMENT CONTROL

DESIGNED BY DRB	DRAWN BY VMS	CHECKED BY DRB
CONST. REVIEW BY -	DATE DECEMBER 2009	SCALE AS SHOWN

CONTRACT NO. FT 928-000-006

DRAWING NO. **ES–9 of 21**

SHEET NO. 70 OF 188

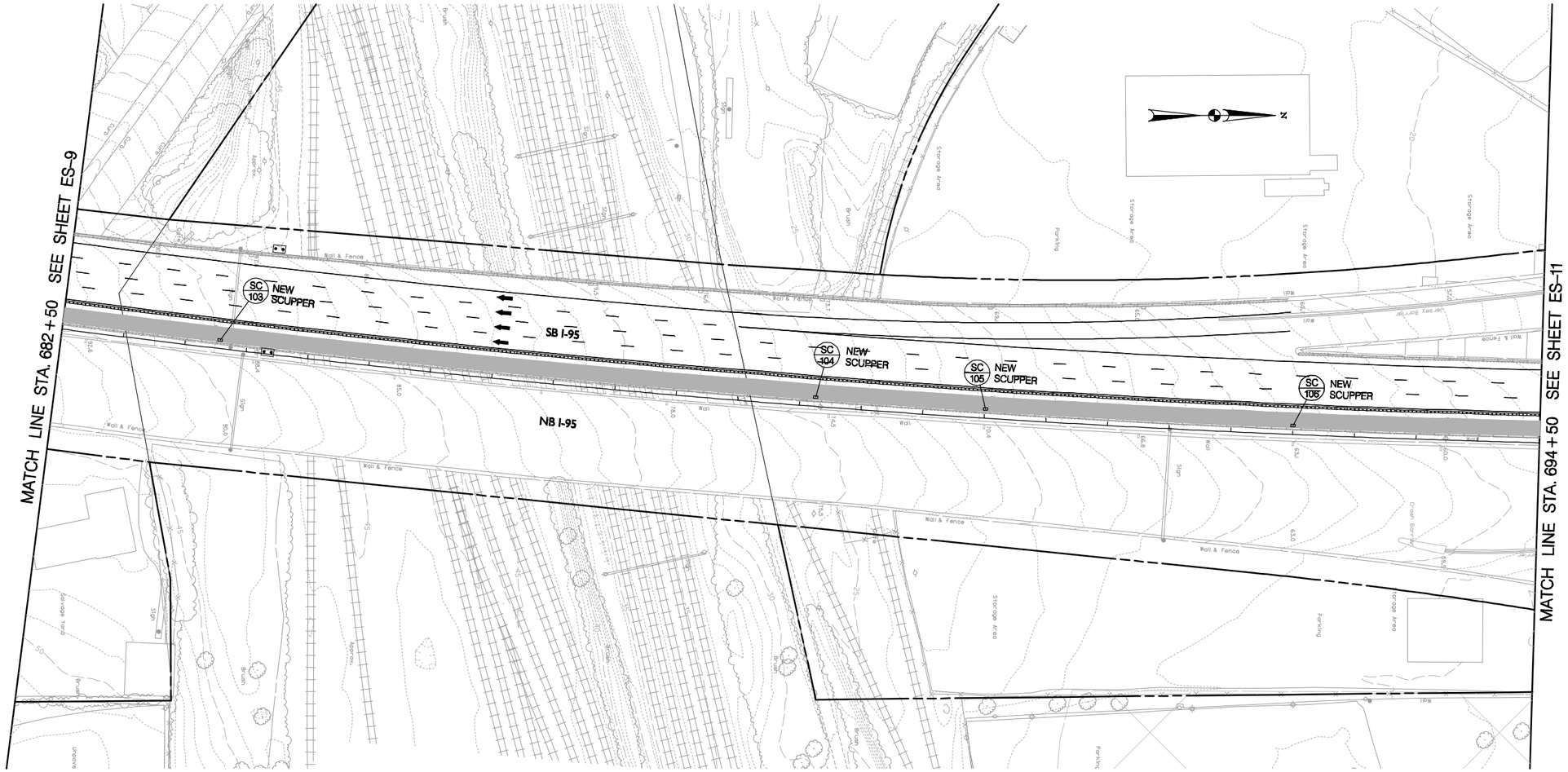

NOTE:

ANY DISTURBED AREA NOT DRAINING TO A SUITABLE SEDIMENT TRAPPING DEVICE MUST BE STABILIZED AT THE END OF EACH WORKING DAY. SUITABLE STABILIZATION METHODS INCLUDE:
SEED AND MULCH, STONE, IMPERVIOUS SHEETING PROPERLY SECURED BY SANDBAGS OR STONES. NO SEPARATE PAYMENT IS PROVIDED FOR THIS ACTIVITY.

LEGEND

CONCRETE OVERLAY

SCALE IN FEET
50 0 50 100

STAGE 2

RK&K
81 MOSHER STREET | BALTIMORE, MD 21217
PH: (410) 728-2900 FAX: (410) 728-3160
Engineers Construction Managers Planners Scientists
www.rkk.com

PHOENIX ENGINEERING, INC.
CONSULTING ENGINEERS
1420-A Joh Avenue
BALTIMORE, MARYLAND 21227
(410) 247-8833 FAX 247-9397

MARYLAND TRANSPORTATION AUTHORITY
Engineering Division

ADDENDUMS & REVISIONS

NO.	DESCRIPTION	BY	DATE

I-95 FROM MORAVIA ROAD TO THE FORT McHENRY TUNNEL - PHASE 1 - SOUTHBOUND

I-95 (BALTIMORE CITY)

EROSION AND SEDIMENT CONTROL

DESIGNED BY DRB | DRAWN BY VMS | CHECKED BY DRB
CONST. REVIEW BY - | DATE DECEMBER 2009 | SCALE AS SHOWN

CONTRACT NO. FT 928-000-006
DRAWING NO. **ES-10 of 21**
SHEET NO. 71 OF 188

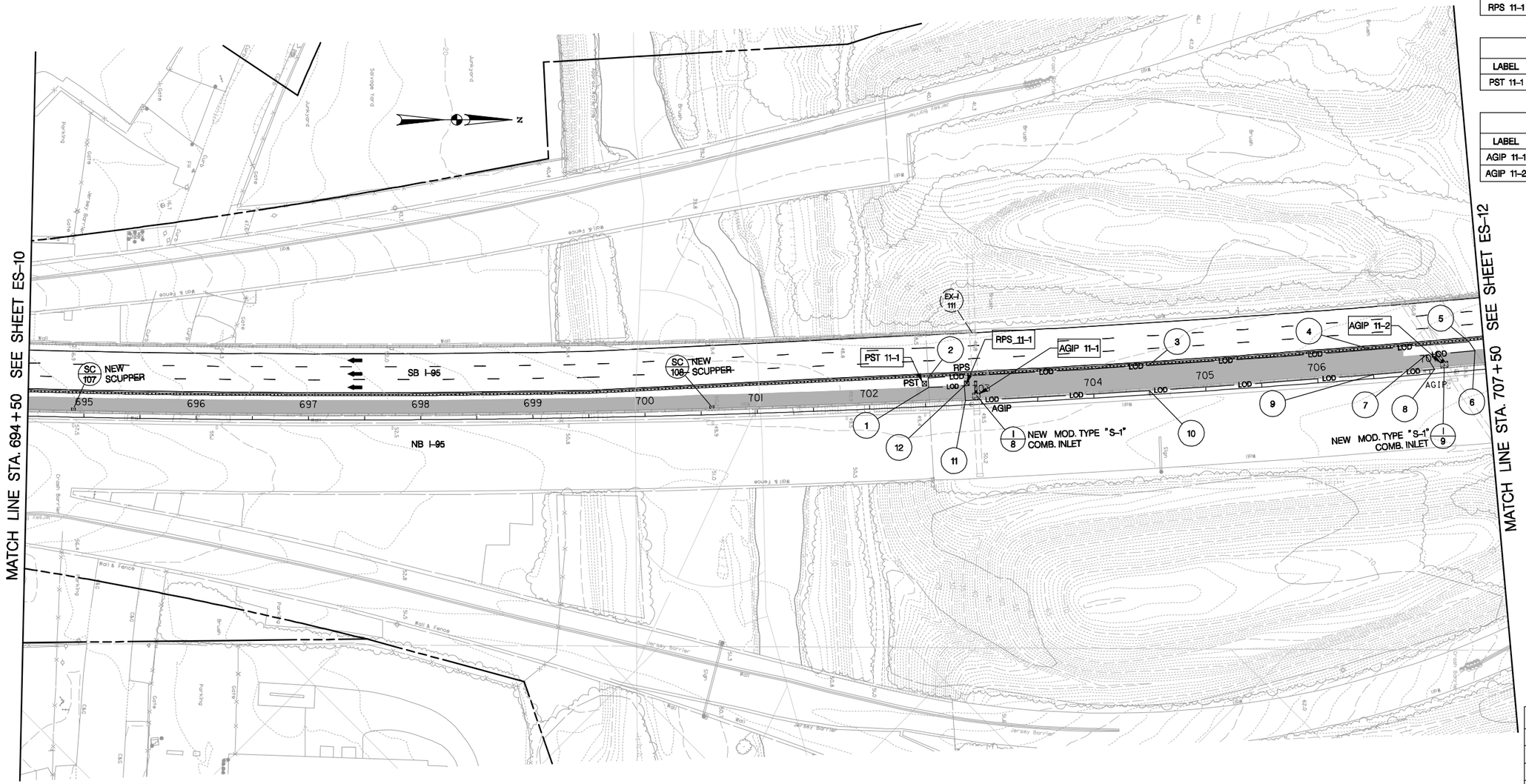

REMOVABLE PUMPING STATION				
LABEL	STATION	OFFSET	BASELINE	QNTY
RPS 11-1	702+87	19 LT	I-95 BL 01	1

PORTABLE SEDIMENT TANK				
LABEL	STATION	OFFSET	BASELINE	QNTY
PST 11-1	702+50	21 LT	I-95 BL 01	1

AT GRADE INLET PROTECTION				
LABEL	STATION	OFFSET	BASELINE	QNTY
AGIP 11-1	702+95	7 LT	I-95 BL 01	1
AGIP 11-2	707+13	7 LT	I-95 BL 01	1

LIMIT OF DISTURBANCE		
NO.	STATION	OFFSET
1	702+53	17 LT
2	702+53	26 LT
3	704+50	26 LT
4	706+50	26 LT
5	707+37	26 LT
6	707+42	17 LT
7	706+98	17 LT
8	707+05	4 LT
9	706+50	4 LT
10	704+50	4 LT
11	702+85	4 LT
12	702+85	17 LT

STAGE 2

NOTE:

ANY DISTURBED AREA NOT DRAINING TO A SUITABLE SEDIMENT TRAPPING DEVICE MUST BE STABILIZED AT THE END OF EACH WORKING DAY. SUITABLE STABILIZATION METHODS INCLUDE:
SEED AND MULCH, STONE, IMPERVIOUS SHEETING PROPERLY SECURED BY SANDBAGS OR STONES. NO SEPARATE PAYMENT IS PROVIDED FOR THIS ACTIVITY.

LEGEND

CONCRETE OVERLAY

FULL DEPTH PAVING THIS PHASE

SCALE IN FEET

50 0 50 100

RK&K
81 MOSHER STREET | BALTIMORE, MD 21217
PH: (410) 728-2900 FAX: (410) 728-3160
Engineers Construction Managers Planners Scientists
www.rkk.com

PHOENIX ENGINEERING, INC.
CONSULTING ENGINEERS
1420-A Joh Avenue
BALTIMORE, MARYLAND 21227
(410) 247-8633 FAX 247-9397

MARYLAND TRANSPORTATION AUTHORITY
Engineering Division

ADDENDUMS & REVISIONS			
NO.	DESCRIPTION	BY	DATE

I-95 FROM MORAVIA ROAD TO THE FORT McHENRY TUNNEL - PHASE 1 - SOUTHBOUND

I-95 (BALTIMORE CITY)

EROSION AND SEDIMENT CONTROL

DESIGNED BY DRB	DRAWN BY VMS	CHECKED BY DRB
CONST. REVIEW BY -	DATE DECEMBER 2009	SCALE AS SHOWN

CONTRACT NO. FT 928-000-006

DRAWING NO. **ES-11 of 21**

SHEET NO. 72 OF 188

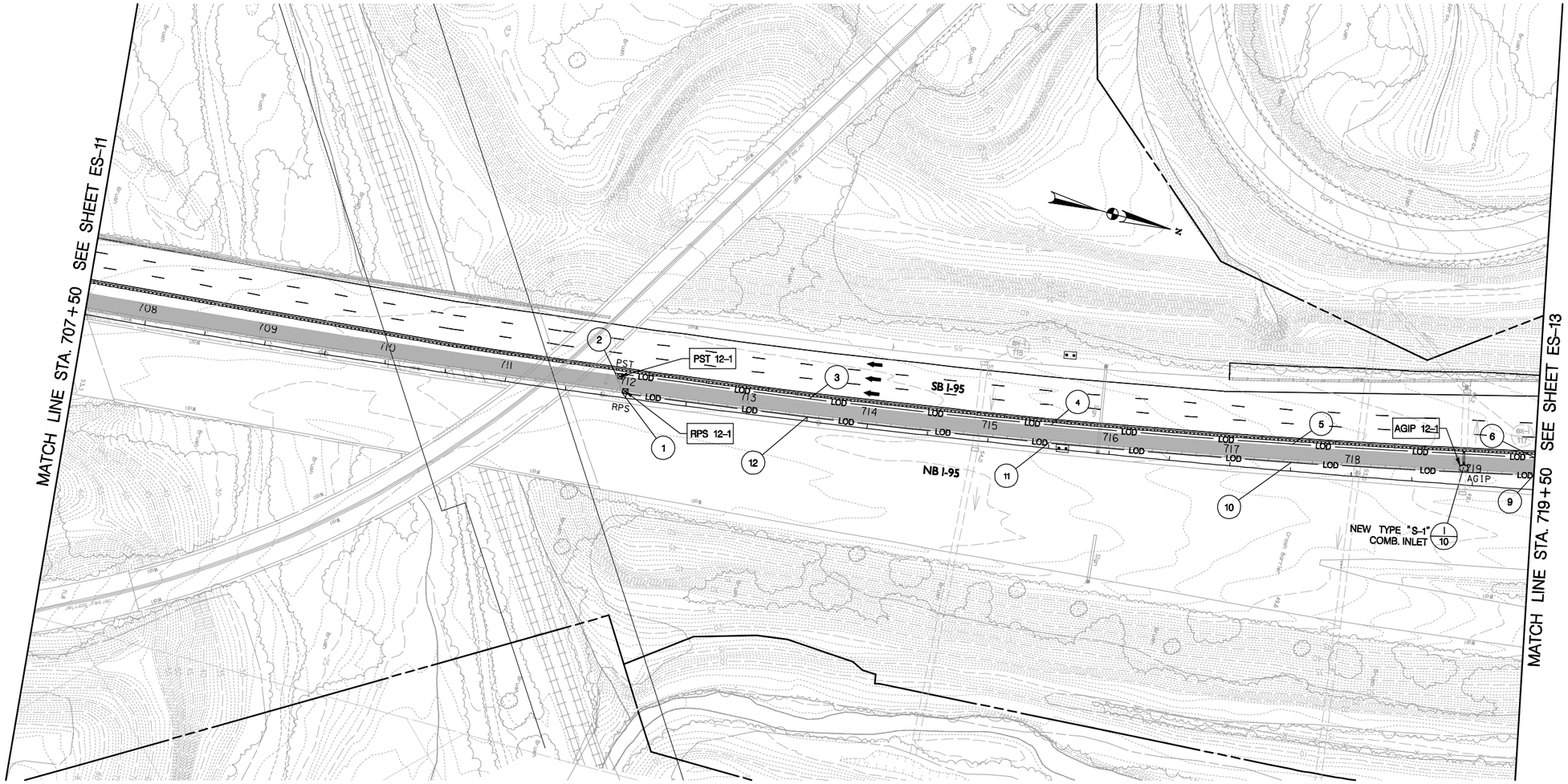

REMOVABLE PUMPING STATION				
LABEL	STATION	OFFSET	BASELINE	QNTY
RPS 12-1	711+99	6 LT	I-95 BL 01	1

PORTABLE SEDIMENT TANK				
LABEL	STATION	OFFSET	BASELINE	QNTY
PST 12-1	711+93	17 LT	I-95 BL 01	1

AT GRADE INLET PROTECTION				
LABEL	STATION	OFFSET	BASELINE	QNTY
AGIP 12-1	718+92	14 LT	I-95 BL 01	1

LIMIT OF DISTURBANCE		
NO.	STATION	OFFSET
1	711+97	3 LT
2	711+89	19 LT
3	713+50	4 LT
4	715+50	4 LT
5	717+50	7 LT
6	719+50	12 LT
9	719+50	26 LT
10	717+50	22 LT
11	715+50	19 LT
12	713+50	19 LT

NOTE: POINTS 7 AND 8 ARE SHOWN ON THE NEXT SHEET.

NOTE:

ANY DISTURBED AREA NOT DRAINING TO A SUITABLE SEDIMENT TRAPPING DEVICE MUST BE STABILIZED AT THE END OF EACH WORKING DAY. SUITABLE STABILIZATION METHODS INCLUDE:
SEED AND MULCH, STONE, IMPERVIOUS SHEETING PROPERLY SECURED BY SANDBAGS OR STONES. NO SEPARATE PAYMENT IS PROVIDED FOR THIS ACTIVITY.

LEGEND

CONCRETE OVERLAY

FULL DEPTH PAVING THIS PHASE

SCALE IN FEET

50 0 50 100

STAGE 2

RK&K
81 MOSHER STREET | BALTIMORE, MD 21217
PH: (410) 728-2900 FAX: (410) 728-3160
Engineers Construction Managers Planners Scientists
www.rkk.com

PHOENIX ENGINEERING, INC.
CONSULTING ENGINEERS
1420-A Joh Avenue
BALTIMORE, MARYLAND 21227
(410) 247-8833 FAX 247-9397

MARYLAND TRANSPORTATION AUTHORITY
Engineering Division

ADDENDUMS & REVISIONS			
NO.	DESCRIPTION	BY	DATE

I-95 FROM MORAVIA ROAD TO THE FORT McHENRY TUNNEL - PHASE 1 - SOUTHBOUND

I-95 (BALTIMORE CITY)

EROSION AND SEDIMENT CONTROL

DESIGNED BY DRB	DRAWN BY VMS	CHECKED BY DRB
CONST. REVIEW BY -	DATE DECEMBER 2009	SCALE AS SHOWN

CONTRACT NO. FT 928-000-006

DRAWING NO. **ES-12 of 21**

SHEET NO. 73 OF 188

LIMIT OF DISTURBANCE		
NO.	STATION	OFFSET
7	721+00	31 LT
8	721+00	16 LT

NOTE: POINTS 1-6 AND 9-12 ARE SHOWN ON THE PREVIOUS SHEET.

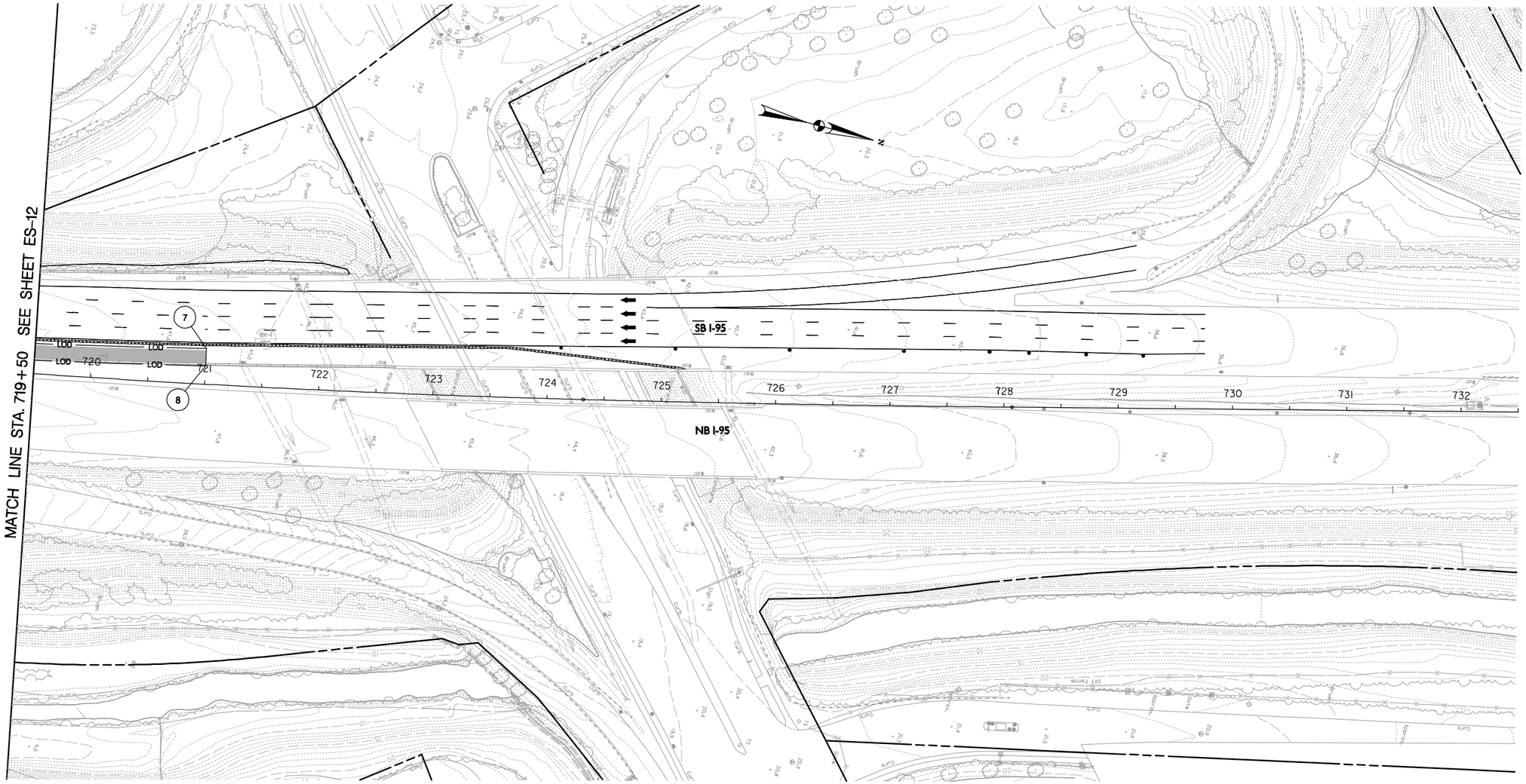

NOTE:

ANY DISTURBED AREA NOT DRAINING TO A SUITABLE SEDIMENT TRAPPING DEVICE MUST BE STABILIZED AT THE END OF EACH WORKING DAY. SUITABLE STABILIZATION METHODS INCLUDE:
SEED AND MULCH, STONE, IMPERVIOUS SHEETING PROPERLY SECURED BY SANDBAGS OR STONES. NO SEPARATE PAYMENT IS PROVIDED FOR THIS ACTIVITY.

LEGEND

FULL DEPTH PAVING THIS PHASE

SCALE IN FEET

50 0 50 100

STAGE 2

RK&K
81 MOSHER STREET | BALTIMORE, MD 21217
PH: (410) 728-2900 FAX: (410) 728-3160
Engineers Construction Managers Planners Scientists
www.rkk.com

PHOENIX ENGINEERING, INC.
CONSULTING ENGINEERS
1420-A Joh Avenue
BALTIMORE, MARYLAND 21227
(410) 247-8633 FAX 247-9397

MARYLAND TRANSPORTATION AUTHORITY
Engineering Division

ADDENDUMS & REVISIONS			
NO.	DESCRIPTION	BY	DATE

I-95 FROM MORAVIA ROAD TO THE FORT McHENRY TUNNEL - PHASE 1 - SOUTHBOUND

I-95 (BALTIMORE CITY)

EROSION AND SEDIMENT CONTROL

DESIGNED BY DRB	DRAWN BY VMS	CHECKED BY DRB
CONST. REVIEW BY -	DATE DECEMBER 2009	SCALE AS SHOWN

CONTRACT NO. FT 928-000-006

DRAWING NO. **ES-13 of 21**

SHEET NO. 74 OF 188

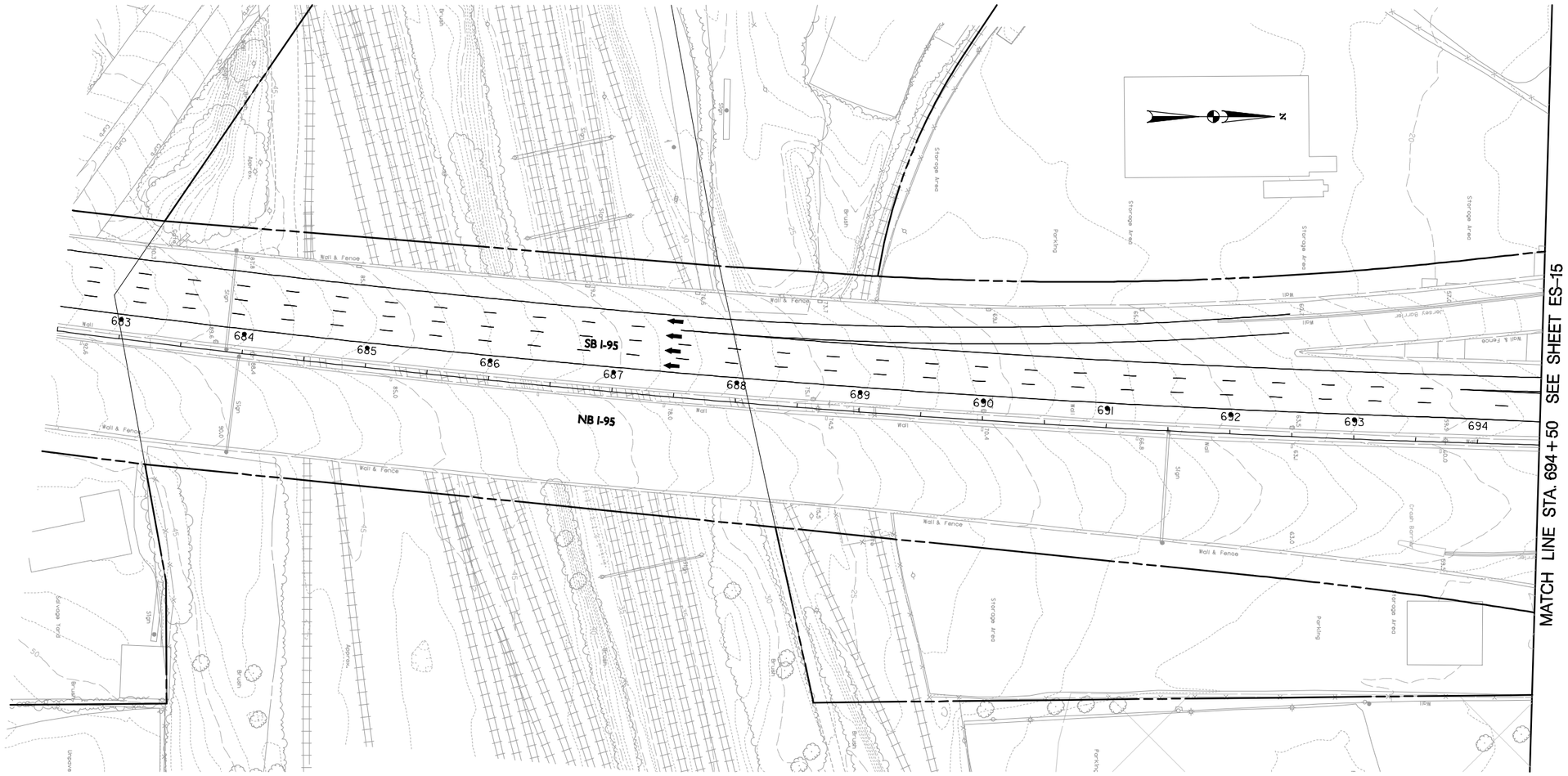

NOTE:

ANY DISTURBED AREA NOT DRAINING TO A SUITABLE SEDIMENT TRAPPING DEVICE MUST BE STABILIZED AT THE END OF EACH WORKING DAY. SUITABLE STABILIZATION METHODS INCLUDE:
SEED AND MULCH, STONE, IMPERVIOUS SHEETING PROPERLY SECURED BY SANDBAGS OR STONES. NO SEPARATE PAYMENT IS PROVIDED FOR THIS ACTIVITY.

SCALE IN FEET
50 0 50 100

STAGE 3

RK&K
81 MOSHER STREET | BALTIMORE, MD 21217
PH: (410) 728-2900 FAX: (410) 728-3160
Engineers Construction Managers Planners Scientists
www.rkk.com

PHOENIX ENGINEERING, INC.
CONSULTING ENGINEERS
1420-A Joh Avenue
BALTIMORE, MARYLAND 21227
(410) 247-8833 FAX 247-9397

MARYLAND TRANSPORTATION AUTHORITY
Engineering Division

ADDENDUMS & REVISIONS

NO.	DESCRIPTION	BY	DATE

I-95 FROM MORAVIA ROAD TO THE FORT McHENRY TUNNEL - PHASE 1 - SOUTHBOUND

I-95 (BALTIMORE CITY)

EROSION AND SEDIMENT CONTROL

DESIGNED BY DRB | DRAWN BY VMS | CHECKED BY DRB
CONST. REVIEW BY - | DATE DECEMBER 2009 | SCALE AS SHOWN

CONTRACT NO. FT 928-000-006
DRAWING NO. **ES-14 of 21**
SHEET NO. 75 OF 188

REMOVABLE PUMPING STATION				
LABEL	STATION	OFFSET	BASELINE	QNTY
RPS 15-1	702+55	36 LT	I-95 BL 01	1

PORTABLE SEDIMENT TANK				
LABEL	STATION	OFFSET	BASELINE	QNTY
PST 15-1	702+47	44 LT	I-95 BL 01	1

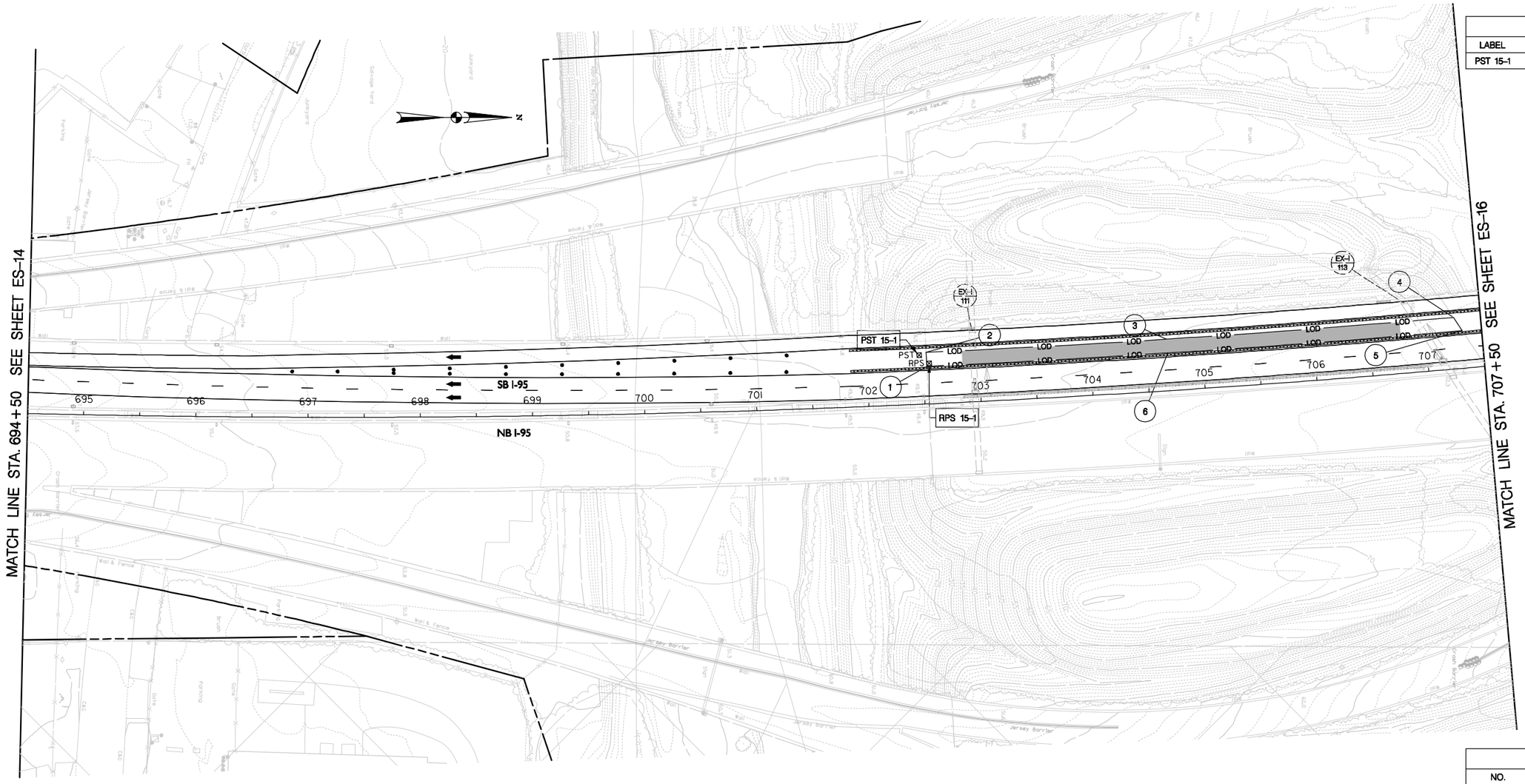

LIMIT OF DISTURBANCE		
NO.	STATION	OFFSET
1	702+53	34 LT
2	702+53	46 LT
3	704+69	46 LT
4	707+26	46 LT
5	707+33	34 LT
6	704+69	34 LT

NOTE:

ANY DISTURBED AREA NOT DRAINING TO A SUITABLE SEDIMENT TRAPPING DEVICE MUST BE STABILIZED AT THE END OF EACH WORKING DAY. SUITABLE STABILIZATION METHODS INCLUDE:
SEED AND MULCH, STONE, IMPERVIOUS SHEETING PROPERLY SECURED BY SANDBAGS OR STONES. NO SEPARATE PAYMENT IS PROVIDED FOR THIS ACTIVITY.

LEGEND

FULL DEPTH PAVING THIS PHASE

SCALE IN FEET

50 0 50 100

STAGE 3

RK&K
81 MOSHER STREET | BALTIMORE, MD 21217
PH: (410) 728-2900 FAX: (410) 728-3160
Engineers Construction Managers Planners Scientists
www.rkk.com

PHOENIX ENGINEERING, INC.
CONSULTING ENGINEERS
1420-A Joh Avenue
BALTIMORE, MARYLAND 21227
(410) 247-8633 FAX 247-9397

MARYLAND TRANSPORTATION AUTHORITY
Engineering Division

ADDENDUMS & REVISIONS

NO.	DESCRIPTION	BY	DATE

I-95 FROM MORAVIA ROAD TO THE FORT McHENRY TUNNEL - PHASE 1 - SOUTHBOUND

I-95 (BALTIMORE CITY)

EROSION AND SEDIMENT CONTROL

DESIGNED BY DRB | DRAWN BY VMS | CHECKED BY DRB
CONST. REVIEW BY - | DATE DECEMBER 2009 | SCALE AS SHOWN

CONTRACT NO. FT 928-000-006

DRAWING NO. **ES-15 of 21**

SHEET NO. 76 OF 188

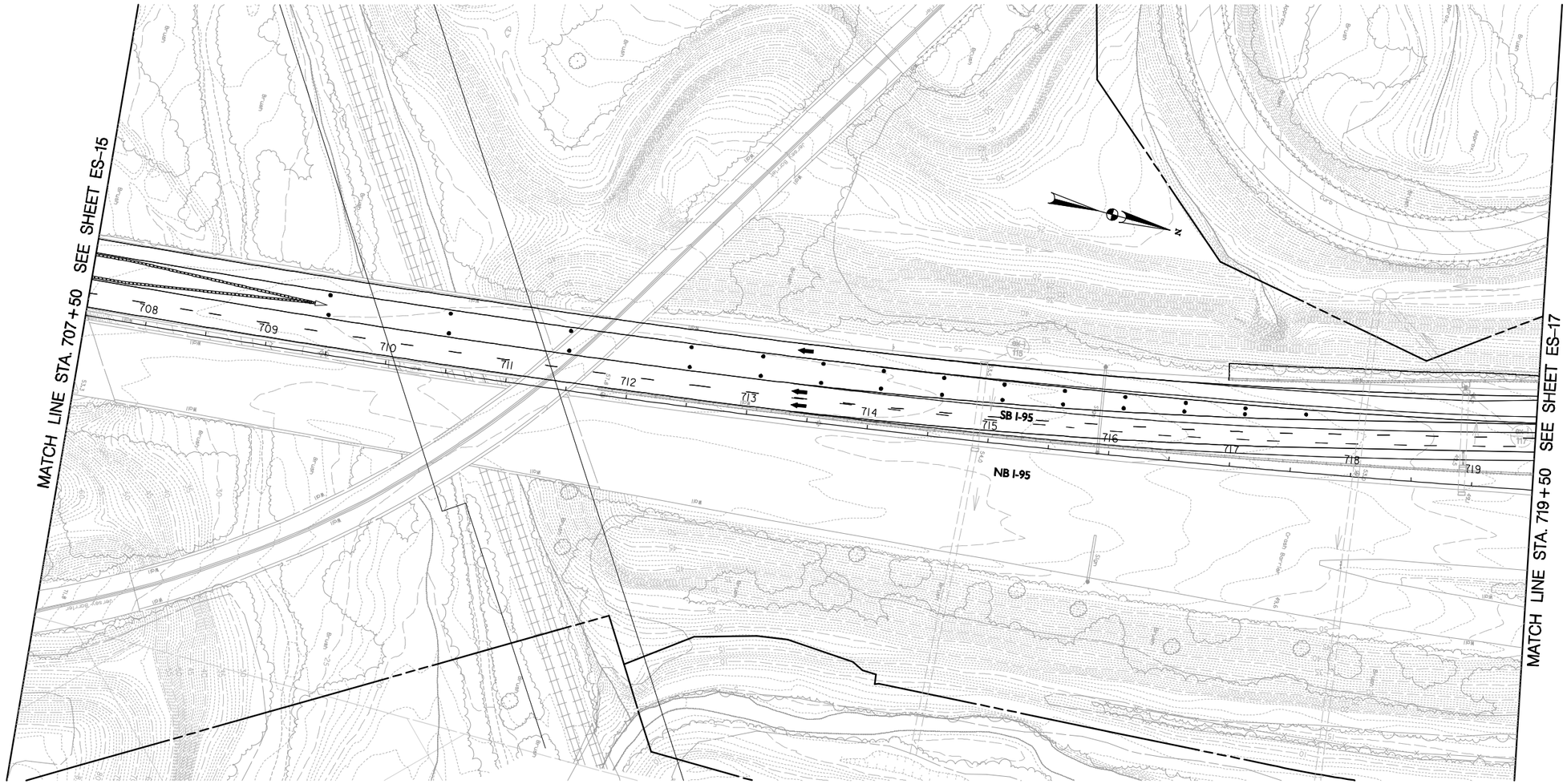

NOTE:

ANY DISTURBED AREA NOT DRAINING TO A SUITABLE SEDIMENT TRAPPING DEVICE MUST BE STABILIZED AT THE END OF EACH WORKING DAY. SUITABLE STABILIZATION METHODS INCLUDE:
SEED AND MULCH, STONE, IMPERVIOUS SHEETING PROPERLY SECURED BY SANDBAGS OR STONES. NO SEPARATE PAYMENT IS PROVIDED FOR THIS ACTIVITY.

SCALE IN FEET
50 0 50 100

STAGE 3

RK&K
81 MOSHER STREET | BALTIMORE, MD 21217
PH: (410) 728-2900 FAX: (410) 728-3160
Engineers Construction Managers Planners Scientists
www.rkk.com

PHOENIX ENGINEERING, INC.
CONSULTING ENGINEERS
1420-A Joh Avenue
BALTIMORE, MARYLAND 21227
(410) 247-8833 FAX 247-9397

MARYLAND TRANSPORTATION AUTHORITY
Engineering Division

ADDENDUMS & REVISIONS

NO.	DESCRIPTION	BY	DATE

I-95 FROM MORAVIA ROAD TO THE FORT McHENRY TUNNEL - PHASE 1 - SOUTHBOUND

I-95 (BALTIMORE CITY)

EROSION AND SEDIMENT CONTROL

DESIGNED BY DRB	DRAWN BY VMS	CHECKED BY DRB
CONST. REVIEW BY -	DATE DECEMBER 2009	SCALE AS SHOWN

CONTRACT NO. FT 928-000-006

DRAWING NO. **ES–16 of 21**

SHEET NO. 77 OF 188

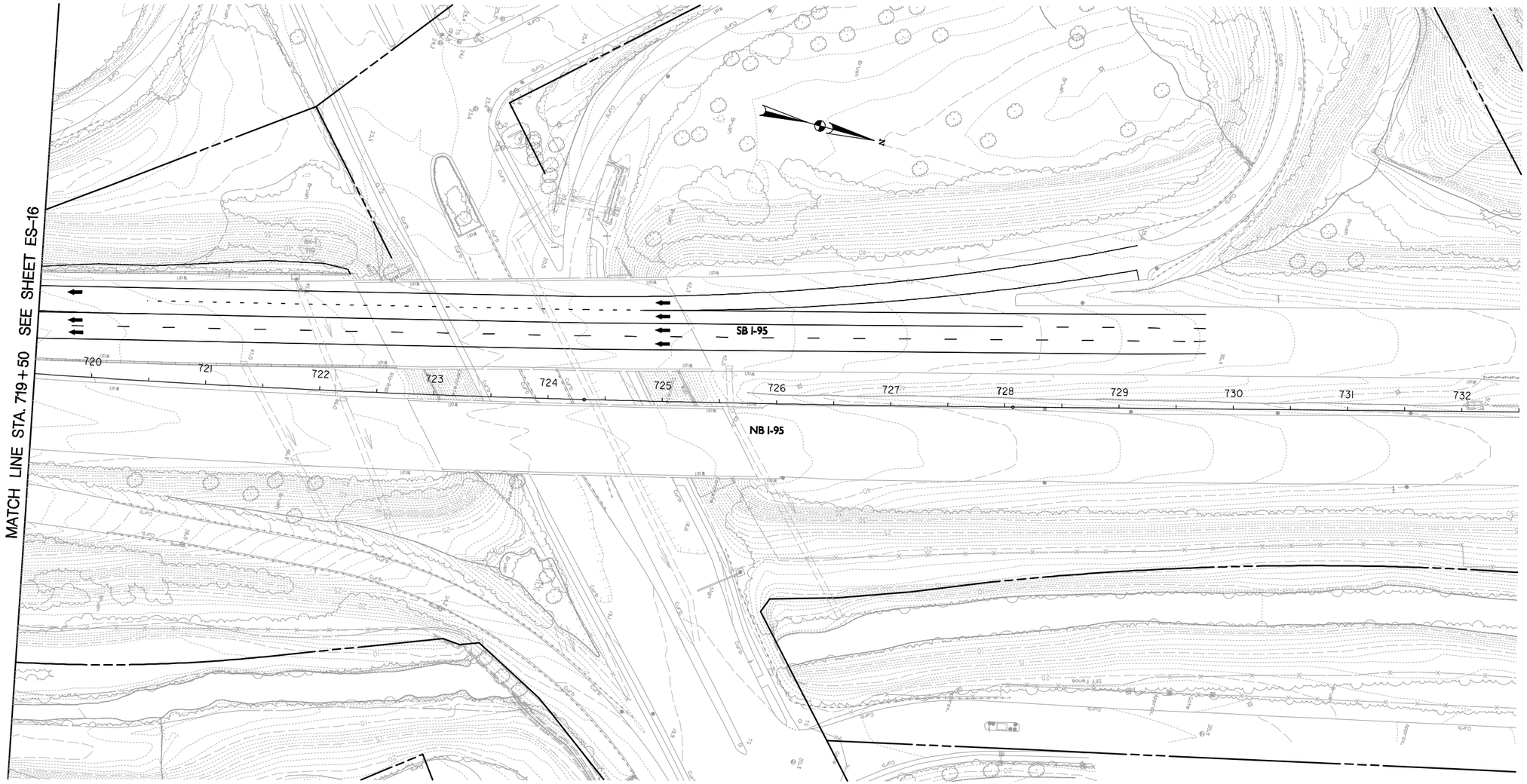

NOTE:

ANY DISTURBED AREA NOT DRAINING TO A SUITABLE SEDIMENT TRAPPING DEVICE MUST BE STABILIZED AT THE END OF EACH WORKING DAY. SUITABLE STABILIZATION METHODS INCLUDE:
SEED AND MULCH, STONE, IMPERVIOUS SHEETING PROPERLY SECURED BY SANDBAGS OR STONES. NO SEPARATE PAYMENT IS PROVIDED FOR THIS ACTIVITY.

SCALE IN FEET
50 0 50 100

STAGE 3

RK&K
81 MOSHER STREET | BALTIMORE, MD 21217
PH: (410) 728-2900 FAX: (410) 728-3160
Engineers Construction Managers Planners Scientists
www.rkk.com

PHOENIX ENGINEERING, INC.
CONSULTING ENGINEERS
1420-A Joh Avenue
BALTIMORE, MARYLAND 21227
(410) 247-8833 FAX 247-9397

MARYLAND TRANSPORTATION AUTHORITY
Engineering Division

ADDENDUMS & REVISIONS

NO.	DESCRIPTION	BY	DATE

I-95 FROM MORAVIA ROAD TO THE FORT McHENRY TUNNEL - PHASE 1 - SOUTHBOUND

I-95 (BALTIMORE CITY)

EROSION AND SEDIMENT CONTROL

DESIGNED BY DRB | DRAWN BY VMS | CHECKED BY DRB
CONST. REVIEW BY - | DATE DECEMBER 2009 | SCALE AS SHOWN

CONTRACT NO. FT 928-000-006
DRAWING NO. **ES-17 of 21**
SHEET NO. 78 OF 188

NOTE:

ANY DISTURBED AREA NOT DRAINING TO A SUITABLE SEDIMENT TRAPPING DEVICE MUST BE STABILIZED AT THE END OF EACH WORKING DAY. SUITABLE STABILIZATION METHODS INCLUDE:
SEED AND MULCH, STONE, IMPERVIOUS SHEETING PROPERLY SECURED BY SANDBAGS OR STONES. NO SEPARATE PAYMENT IS PROVIDED FOR THIS ACTIVITY.

SCALE IN FEET
50 0 50 100

STAGE 4

RK&K
81 MOSHER STREET | BALTIMORE, MD 21217
PH: (410) 728-2900 FAX: (410) 728-3160
Engineers Construction Managers Planners Scientists
www.rkk.com

PHOENIX ENGINEERING, INC.
CONSULTING ENGINEERS
1420-A Joh Avenue
BALTIMORE, MARYLAND 21227
(410) 247-8833 FAX 247-9397

MARYLAND TRANSPORTATION AUTHORITY
Engineering Division

ADDENDUMS & REVISIONS

NO.	DESCRIPTION	BY	DATE

I-95 FROM MORAVIA ROAD TO THE FORT McHENRY TUNNEL - PHASE 1 - SOUTHBOUND

I-95 (BALTIMORE CITY)

EROSION AND SEDIMENT CONTROL

DESIGNED BY DRB	DRAWN BY VMS	CHECKED BY DRB
CONST. REVIEW BY -	DATE DECEMBER 2009	SCALE AS SHOWN

CONTRACT NO. FT 928-000-006

DRAWING NO. **ES-18 of 21**

SHEET NO. 79 OF 188

REMOVABLE PUMPING STATION				
LABEL	STATION	OFFSET	BASELINE	QNTY
RPS 19-1	702+58	27 LT	I-95 BL 01	1

PORTABLE SEDIMENT TANK				
LABEL	STATION	OFFSET	BASELINE	QNTY
PST 19-1	702+49	34 LT	I-95 BL 01	1

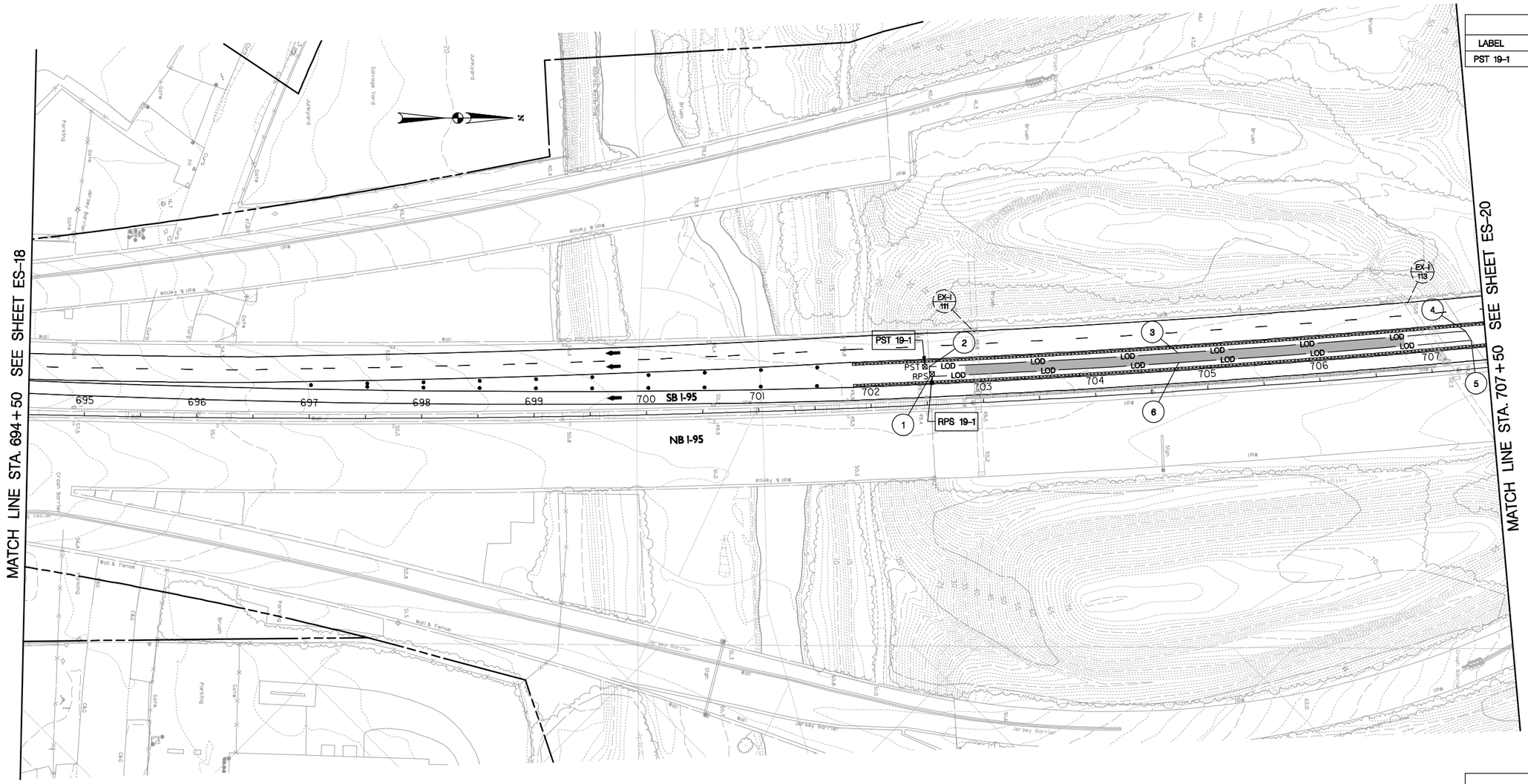

LIMIT OF DISTURBANCE		
NO.	STATION	OFFSET
1	702+53	25 LT
2	702+53	34 LT
3	704+76	34 LT
4	707+33	34 LT
5	707+37	25 LT
6	704+76	25 LT

NOTE:

ANY DISTURBED AREA NOT DRAINING TO A SUITABLE SEDIMENT TRAPPING DEVICE MUST BE STABILIZED AT THE END OF EACH WORKING DAY. SUITABLE STABILIZATION METHODS INCLUDE:
SEED AND MULCH, STONE, IMPERVIOUS SHEETING PROPERLY SECURED BY SANDBAGS OR STONES. NO SEPARATE PAYMENT IS PROVIDED FOR THIS ACTIVITY.

LEGEND

FULL DEPTH PAVING THIS PHASE

SCALE IN FEET

50 0 50 100

STAGE 4

RK&K
81 MOSHER STREET | BALTIMORE, MD 21217
PH: (410) 728-2900 FAX: (410) 728-3160
Engineers Construction Managers Planners Scientists
www.rkk.com

PHOENIX ENGINEERING, INC.
CONSULTING ENGINEERS
1420-A Joh Avenue
BALTIMORE, MARYLAND 21227
(410) 247-8633 FAX 247-9397

MARYLAND TRANSPORTATION AUTHORITY
Engineering Division

ADDENDUMS & REVISIONS			
NO.	DESCRIPTION	BY	DATE

I-95 FROM MORAVIA ROAD TO THE FORT McHENRY TUNNEL - PHASE 1 - SOUTHBOUND

I-95 (BALTIMORE CITY)

EROSION AND SEDIMENT CONTROL

DESIGNED BY DRB | DRAWN BY VMS | CHECKED BY DRB
CONST. REVIEW BY - | DATE DECEMBER 2009 | SCALE AS SHOWN

CONTRACT NO. FT 928-000-006

DRAWING NO. **ES-19 of 21**

SHEET NO. 80 OF 188

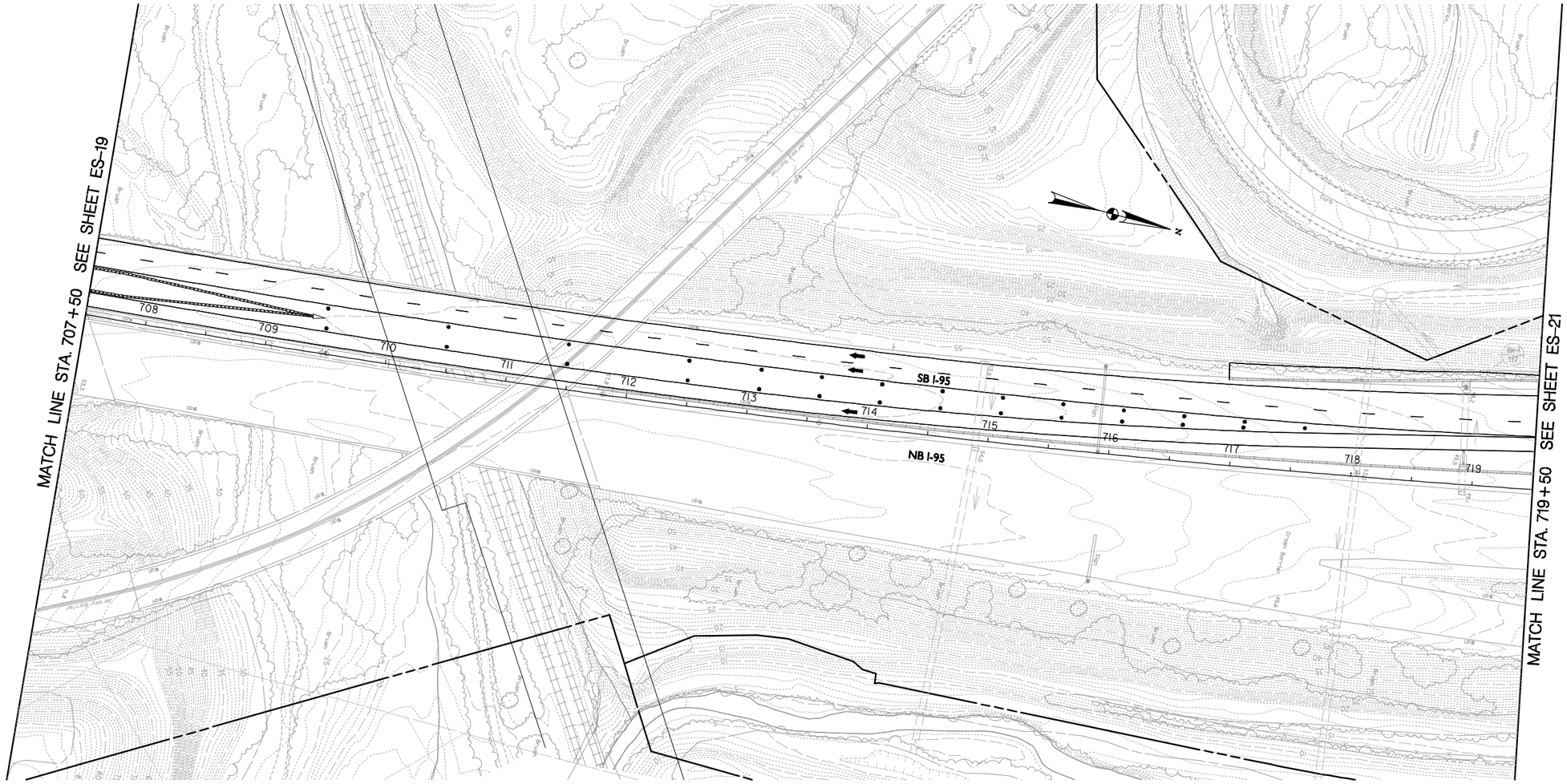

NOTE:

ANY DISTURBED AREA NOT DRAINING TO A SUITABLE SEDIMENT TRAPPING DEVICE MUST BE STABILIZED AT THE END OF EACH WORKING DAY. SUITABLE STABILIZATION METHODS INCLUDE:
SEED AND MULCH, STONE, IMPERVIOUS SHEETING PROPERLY SECURED BY SANDBAGS OR STONES. NO SEPARATE PAYMENT IS PROVIDED FOR THIS ACTIVITY.

SCALE IN FEET
50 0 50 100

STAGE 4

RK&K
81 MOSHER STREET | BALTIMORE, MD 21217
PH: (410) 728-2900 FAX: (410) 728-3160
Engineers Construction Managers Planners Scientists
www.rkk.com

PHOENIX ENGINEERING, INC.
CONSULTING ENGINEERS
1420-A Joh Avenue
BALTIMORE, MARYLAND 21227
(410) 247-8833 FAX 247-9397

MARYLAND TRANSPORTATION AUTHORITY
Engineering Division

ADDENDUMS & REVISIONS

NO.	DESCRIPTION	BY	DATE

I-95 FROM MORAVIA ROAD TO THE FORT McHENRY TUNNEL - PHASE 1 - SOUTHBOUND

I-95 (BALTIMORE CITY)

EROSION AND SEDIMENT CONTROL

DESIGNED BY DRB | DRAWN BY VMS | CHECKED BY DRB
CONST. REVIEW BY - | DATE DECEMBER 2009 | SCALE AS SHOWN

CONTRACT NO. FT 928-000-006
DRAWING NO. **ES-20 of 21**
SHEET NO. 81 OF 188

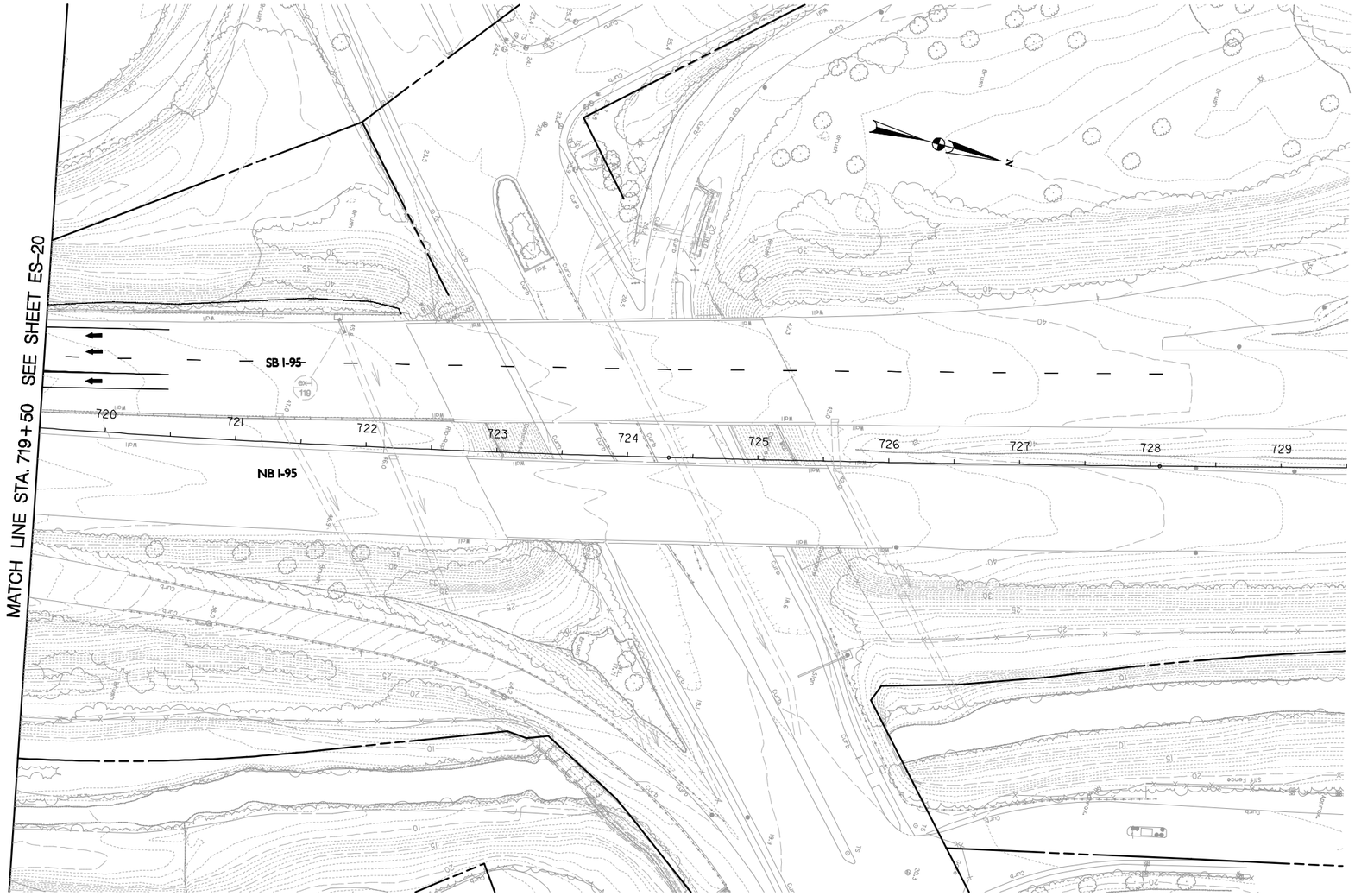

NOTE:

ANY DISTURBED AREA NOT DRAINING TO A SUITABLE SEDIMENT TRAPPING DEVICE MUST BE STABILIZED AT THE END OF EACH WORKING DAY. SUITABLE STABILIZATION METHODS INCLUDE:
SEED AND MULCH, STONE, IMPERVIOUS SHEETING PROPERLY SECURED BY SANDBAGS OR STONES. NO SEPARATE PAYMENT IS PROVIDED FOR THIS ACTIVITY.

SCALE IN FEET
50 0 50 100

STAGE 4

RK&K
81 MOSHER STREET | BALTIMORE, MD 21217
PH: (410) 728-2900 FAX: (410) 728-3160
Engineers Construction Managers Planners Scientists
www.rkk.com

PHOENIX ENGINEERING, INC.
CONSULTING ENGINEERS
1420-A Joh Avenue
BALTIMORE, MARYLAND 21227
(410) 247-8833 FAX 247-9397

MARYLAND TRANSPORTATION AUTHORITY
Engineering Division

ADDENDUMS & REVISIONS

NO.	DESCRIPTION	BY	DATE

I-95 FROM MORAVIA ROAD TO THE FORT McHENRY TUNNEL - PHASE 1 - SOUTHBOUND
I-95 (BALTIMORE CITY)
EROSION AND SEDIMENT CONTROL

DESIGNED BY DRB | DRAWN BY VMS | CHECKED BY DRB
CONST. REVIEW BY - | DATE DECEMBER 2009 | SCALE AS SHOWN

CONTRACT NO. FT 928-000-006
DRAWING NO. **ES-21 of 21**
SHEET NO. 82 OF 188

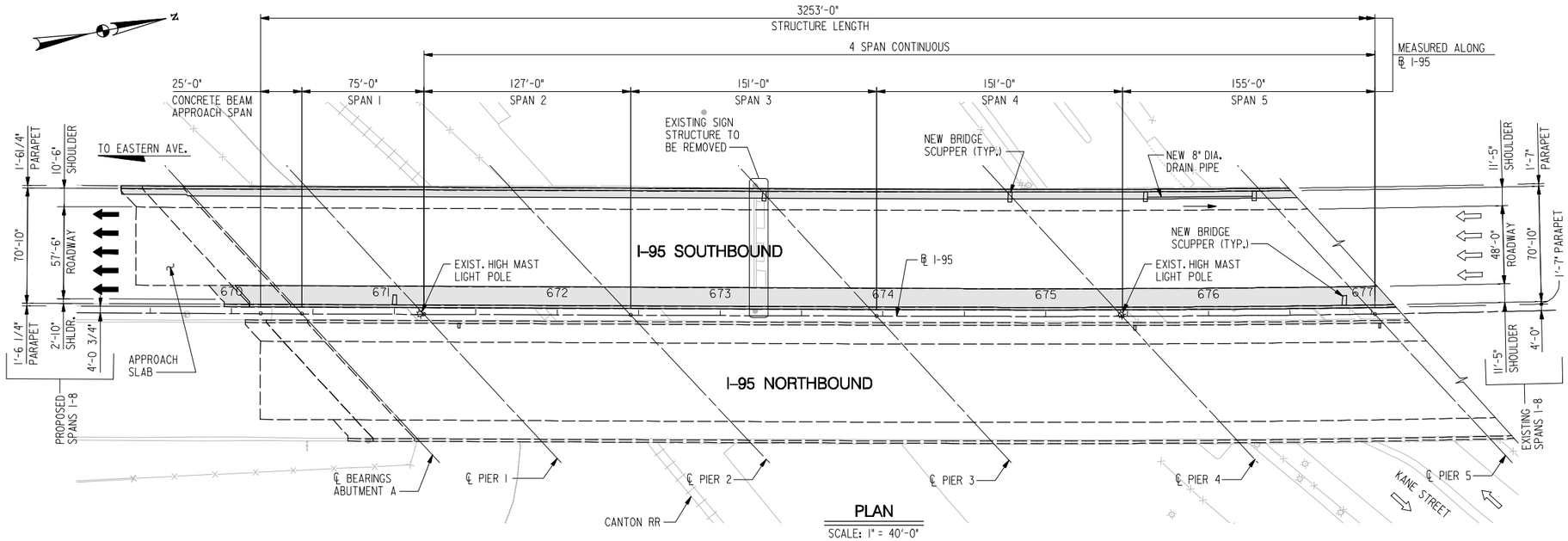

PLAN

SCALE: 1" = 40'-0"

LEGEND:

INDICATES LIMITS OF WORK

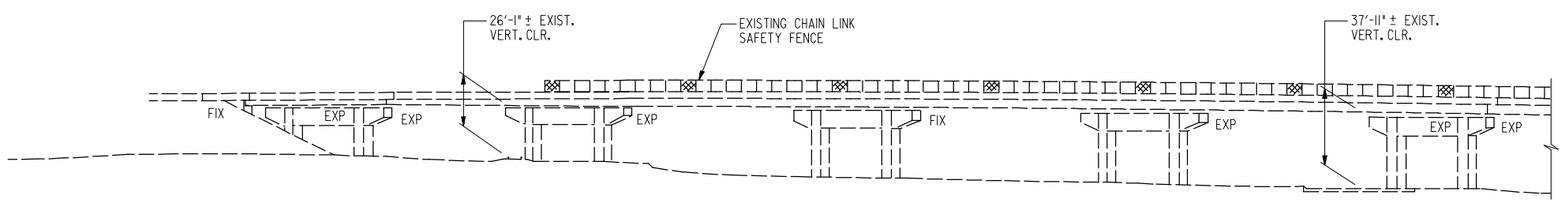

ELEVATION

SCALE: 1" = 40'-0"

GENERAL NOTES:

SPECIFICATIONS: - SHA SPECIFICATIONS DATED JULY 2008.
- REVISIONS THEREOF AND ADDITIONS THERETO, AND SPECIAL PROVISIONS FOR MATERIALS AND CONSTRUCTION.

AASHTO STANDARD SPECIFICATIONS FOR HIGHWAY BRIDGES DATED 2002 FOR DESIGN.

CONCRETE DESIGN: LOAD FACTOR DESIGN WITH THE EXCEPTION OF CONCRETE DECKS WHICH WILL BE DESIGNED BY THE SERVICE LOAD DESIGN METHOD. fc = 1350 PSI FOR CONCRETE BRIDGE DECK SLABS SUPPORTED BY STRINGERS.

REINFORCING STEEL DESIGN FOR DECK SLABS: fs = 24,000 PSI.

LOADING: HS-20, WITH PROVISIONS FOR FUTURE 2" WEARING SURFACE.

CONCRETE: ALL CONCRETE FOR ABUTMENT BACKWALLS, APPROACH SPANS AND SUPERSTRUCTURE DECK SHALL BE MODIFIED MIX NO. 6 (4500 PSI) WITH MAXIMUM SIZE OF AGGREGATE OF 3/4", SEE SPECIAL PROVISIONS. CONCRETE IN PARAPETS AND APPROACH SLABS SHALL BE MIX NO. 6 CONCRETE (4500 PSI).

REINFORCING STEEL: REINFORCING STEEL SHALL CONFORM TO ASTM A 615, GRADE 60. ALL SPLICES, NOT SHOWN, SHALL BE LAPPED AS PER MD SHA BAR LAP CHARTS. MINIMUM COVER FOR ANY BAR SHALL BE 2" UNLESS OTHERWISE NOTED.

FOR TIES AND STIRRUPS; STANDARD ACI BENDING TOLERANCES ARE MODIFIED TO PLUS (+) ZERO INCHES, MINUS (-) NORMAL ACI BENDING TOLERANCES.

ONLY GRADE 60 CAN BE USED ON THIS PROJECT.

REINFORCING STEEL IN THE FOLLOWING AREAS SHALL BE EPOXY COATED:
- ENTIRE SUPERSTRUCTURE (INCLUDING PARAPETS)
- ABUTMENT BACKWALLS AND APPROACH SPANS
- PARAPET PORTION OF APPROACH SPANS
- APPROACH SLABS INCLUDING BARRIERS

KEYS: ALL KEYS ARE NOMINAL SIZE.

CHAMFERS: ALL EXPOSED CORNERS OF ALL CONCRETE STRUCTURES SHALL BE CHAMFERED WITH 3/4" x 3/4" MILLED CHAMFERED STRIPS UNLESS NOTED OTHERWISE.

EXISTING STRUCTURE: ALL DIMENSIONS AFFECTED BY THE GEOMETRICS AND/OR LOCATION OF THE EXISTING STRUCTURE SHALL BE CHECKED IN THE FIELD BY THE CONTRACTOR, BEFORE ANY CONSTRUCTION IS DONE, AND BEFORE ANY REINFORCING STEEL, ETC., IS ORDERED OR FABRICATED. IT SHALL BE THE RESPONSIBILITY OF THE CONTRACTOR TO SUPPLY THE ENGINEER WITH ALL FIELD DIMENSIONS REQUIRED TO CHECK DETAIL DRAWINGS. THE +/- MARKS SHOWN WITH THE DIMENSIONS AND STATIONS DO NOT INDICATE ANY DEGREE OF PRECISION. THESE MARKS (+/-) INDICATE EXISTING DIMENSIONS AND STATIONS THAT MAY VARY AND DO REQUIRE FIELD VERIFICATION BY THE CONTRACTOR.

EXISTING STRUCTURE SHOWN IN LONG DASHED LINES.

PORTIONS OF EXISTING STRUCTURE SHOWN HATCHED, TO BE REMOVED AND RE-CONSTRUCTED ON I-95 SOUTHBOUND.

NOTES:

1. WORK ON THE SOUTHBOUND RIGHT (WEST) SHOULDER INVOLVES REMOVAL OF THE EXISTING PARAPET AND DECK OVERHANG. THE EXISTING PARAPET WILL BE REPLACED WITH 42" F-SHAPE PARAPET.
2. WORK ON THE SOUTHBOUND LEFT (EAST) SHOULDER INVOLVES REMOVAL OF EXISTING PARAPET AND DECK OVERHANG AND PARTIAL DECK REMOVAL TO THE EXISTING SHOULDER BREAKLINE. THE EXISTING PARAPET WILL BE REPLACED WITH 42" F-SHAPE PARAPET. THE EXISTING ROADWAY JOINTS SHALL BE REPLACED WITHIN LIMITS OF WORK TO MATCH NEW ROADWAY CROSS SLOPE.
3. CONTRACTOR SHALL REPLACE COMPRESSION SEALS AT THE SOUTHBOUND ABUTMENTS AND AT SOUTHBOUND PIER 13 FOR THE FULL WIDTH OF THE BRIDGE. CONTRACTOR SHALL REPLACE STRIP SEALS AT SOUTHBOUND PIERS 7, 10, 12, 15, 17, 21 AND 22 FOR THE FULL WIDTH OF THE BRIDGE.
4. CONTRACTOR SHALL INSTALL FULL-LENGTH DRAINAGE TROUGHS UNDER STRIP SEAL EXPANSION JOINTS AT SOUTHBOUND PIERS 7, 10, 12, 15, 17, 21 AND 22. SEE SHA STD. NO. BR-SR(0.05)-95-308.
5. CONTRACTOR SHALL REMOVE AND SALVAGE EXISTING CHAIN LINK FENCE AND PROTECTIVE BARRIER AND RE-INSTALL ON THE NEW F-SHAPE PARAPETS.
6. CONTRACTOR SHALL REMOVE AND REPLACE EXISTING SOUTHBOUND BRIDGE SCUPPERS WITH NEW SCUPPERS, INCLUDING LATERAL DRAIN PIPES AS DETAILED ON THE BRIDGE PLANS. FOR LOCATION OF BRIDGE SCUPPERS, SEE ROADWAY PLANS.
7. FOR DETAILS OF EXISTING SIGN STRUCTURE TO BE REMOVED, SEE DWG. NOS. S-48 AND S-49.
8. CONTROL JOINTS IN NEW SOUTHBOUND PARAPETS SHALL BE LOCATED AT EQUAL SPACING BETWEEN CENTERLINES OF PIERS AND ABUTMENTS, OR AT MIDPOINT OF EACH FENCE OR RAILROAD PROTECTIVE BARRIER PANEL, AS APPLICABLE. MAXIMUM SPACING OF CONTROL JOINTS SHALL BE 8'-0". PROVIDE A PARAFFIN JOINT AT CENTERLINE OF CONTINUOUS SPAN PIERS. FOR JOINT DETAILS, SEE SHA STD. NOS. BR-SS(6.37)-05-247B AND BR-SS(6.37)-05-247B MOD.
9. THE WIDTHS PROVIDED FOR PARTIAL DECK REMOVAL AND CROSS SLOPE ADJUSTMENT ASSUME THAT THE EXISTING CROSS SLOPE BREAK BETWEEN THE MEDIAN LANE AND SHOULDER IS 11'-5" FROM THE BOTTOM OF THE MEDIAN BRIDGE PARAPET. THE CONTRACTOR SHALL VERIFY THE LOCATION OF THE EXISTING CROSS SLOPE BREAK IN THE FIELD, AND IF IT IS DETERMINED THAT THE CROSS SLOPE BREAK IS LOCATED MORE THAN 11'-5" FROM THE BOTTOM OF THE BRIDGE PARAPET, THE CONTRACTOR SHALL MODIFY THE PARTIAL DECK REMOVAL AND CONCRETE OVERLAY TO PROVIDE THE CROSS SLOPE BREAK ADJUSTMENT FROM THE FIELD LOCATED MEDIAN LANE/SHOULDER CROSS SLOPE BREAK. THE DECK CROSS SLOPE SHALL BE AS DETAILED AND NOTED ON SHEETS SE-01 THROUGH SE-3. SEE GENERAL NOTE 17 ON SHEET GN-01.

RK&K
81 MOSHER STREET | BALTIMORE, MD 21217
PH: (410) 728-2900 FAX: (410) 728-3180
Engineers Construction Managers Planners Scientists
www.rkk.com

ALA
ATHAVALE, LYSTAD & ASSOCIATES INC.
Consulting Engineers Rockville, Maryland

MARYLAND TRANSPORTATION AUTHORITY
Engineering Division

ADDENDUMS & REVISIONS

NO.	DESCRIPTION	BY	DATE

I-95 FROM MORAVIA ROAD TO THE FORT McHENRY TUNNEL - PHASE 1 - SOUTHBOUND

I-95 (BALTIMORE CITY)
BRIDGE NO. BCW 596-2 - I-95 S.B. OVER CANTON RAILROAD TO HERRING RUN
GENERAL PLAN AND ELEVATION - I

DESIGNED BY K.A.	DRAWN BY J.E.	CHECKED BY D.W.
CONST. REVIEW BY	DATE DECEMBER 2009	SCALE AS SHOWN

CONTRACT NO. FT 928-000-006
DRAWING NO. S-1
SHEET NO. 83 OF 188

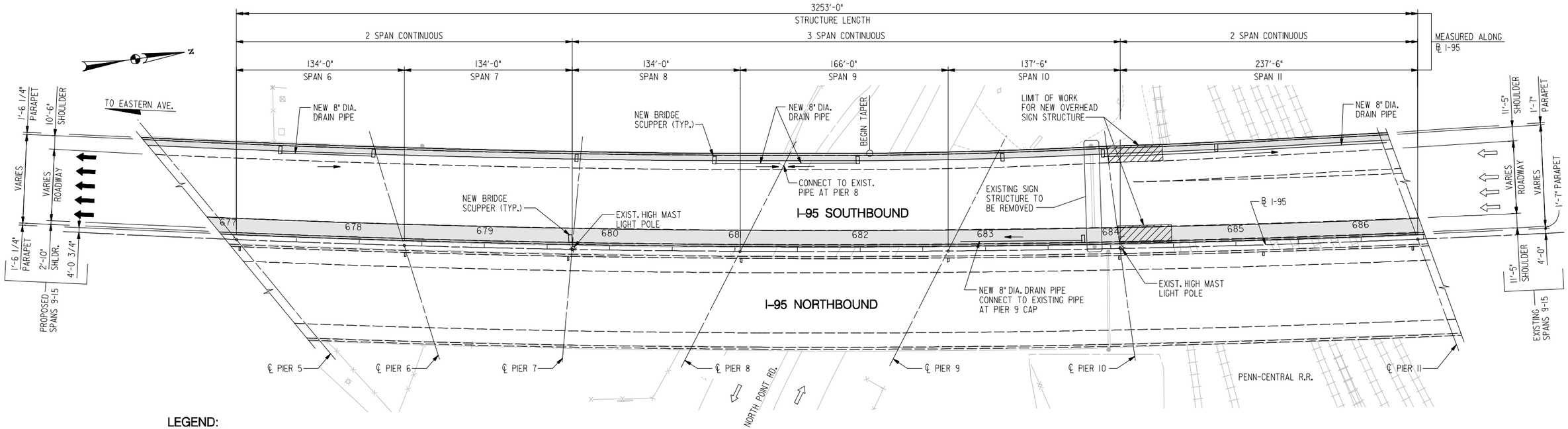

PLAN

SCALE: 1" = 40'-0"

LEGEND:

- INDICATES LIMITS OF WORK
- INDICATES LIMITS OF WORK FOR NEW OVERHEAD SIGN STRUCTURE

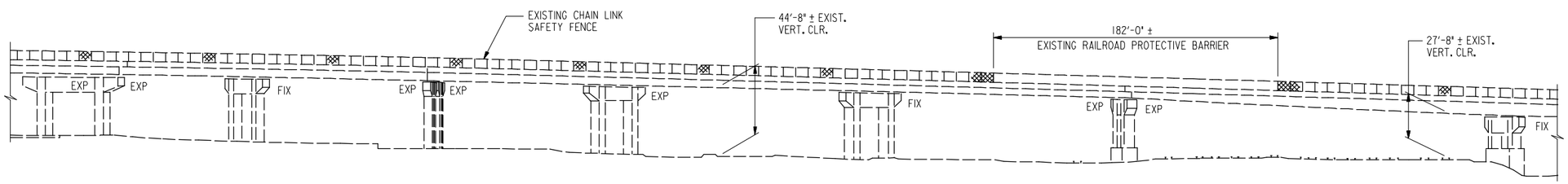

ELEVATION

SCALE: 1" = 40'-0"

NOTES:

1. FOR DETAILS OF NEW OVERHEAD SIGN STRUCTURE AND EXISTING SIGN STRUCTURE TO BE REMOVED, SEE DWG. NOS. S-47 TO S-59.
2. FOR GENERAL NOTES, SEE DWG. NO. S-1.

RK&K
81 MOSHER STREET | BALTIMORE, MD 21217
PH: (410) 728-2900 FAX: (410) 728-3180
Engineers Construction Managers Planners Scientists
www.rkk.com

ALA
ATHAVALE, LYSTAD & ASSOCIATES INC.
Consulting Engineers Rockville, Maryland

MARYLAND TRANSPORTATION AUTHORITY
Engineering Division

ADDENDUMS & REVISIONS			
NO.	DESCRIPTION	BY	DATE

I-95 FROM MORAVIA ROAD TO THE FORT McHENRY TUNNEL - PHASE 1 - SOUTHBOUND
I-95 (BALTIMORE CITY)
BRIDGE NO. BCW 596-2 - I-95 S.B. OVER CANTON RAILROAD TO HERRING RUN
GENERAL PLAN AND ELEVATION - 2

CONTRACT NO. FT 928-000-006
DRAWING NO. **S-2**

DESIGNED BY K.A. | DRAWN BY J.E. | CHECKED BY D.W.
CONST. REVIEW BY | DATE DECEMBER 2009 | SCALE AS SHOWN

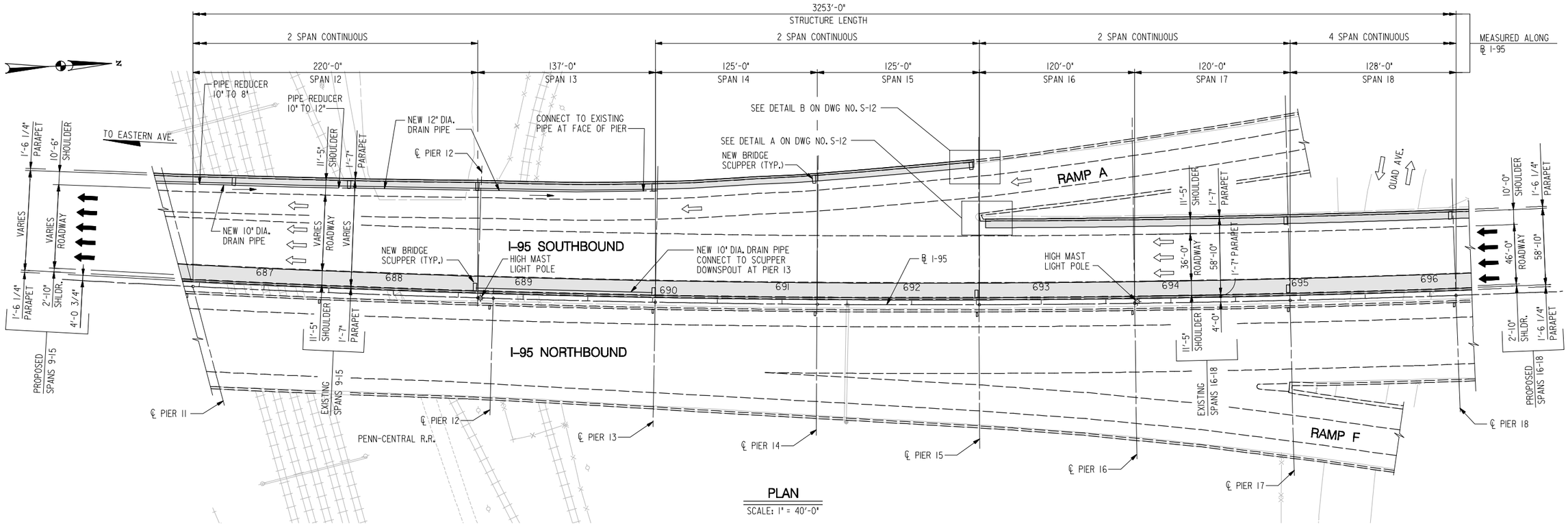

PLAN

SCALE: 1" = 40'-0"

LEGEND:

INDICATES LIMITS OF WORK

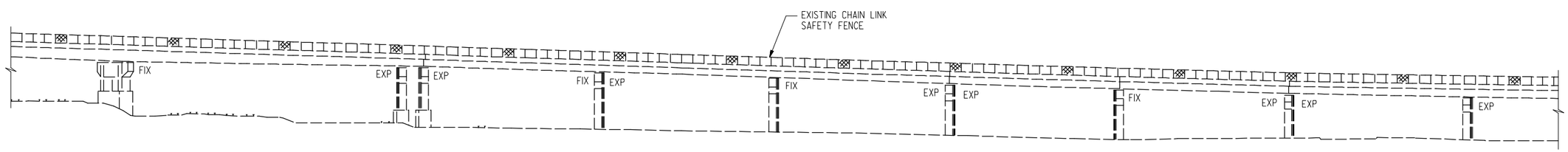

ELEVATION

SCALE: 1" = 40'-0"

NOTES:

1. FOR GENERAL NOTES, SEE DWG. NO. S-1.
2. THE 42" F-SHAPE PARAPETS SHALL BE TRANSITIONED DOWN TO MEET THE 34" EXISTING PARAPETS AT PIER 15. FOR DETAILS, SEE DWG. NO. S-12.

RK&K
81 MOSHER STREET | BALTIMORE, MD 21217
PH: (410) 728-2900 FAX: (410) 728-3180
Engineers Construction Managers Planners Scientists
www.rkk.com

ALA
ATHAVALE, LYSTAD & ASSOCIATES INC.
Consulting Engineers Rockville, Maryland

MARYLAND TRANSPORTATION AUTHORITY
Engineering Division

ADDENDUMS & REVISIONS			
NO.	DESCRIPTION	BY	DATE

I-95 FROM MORAVIA ROAD TO THE FORT McHENRY TUNNEL - PHASE 1 - SOUTHBOUND

I-95 (BALTIMORE CITY)
BRIDGE NO. BCW 596-2 - I-95 S.B. OVER CANTON RAILROAD TO HERRING RUN
GENERAL PLAN AND ELEVATION - 3

DESIGNED BY K.A.	DRAWN BY J.E.	CHECKED BY D.W.	
CONST. REVIEW BY	DATE DECEMBER 2009	SCALE AS SHOWN	

CONTRACT NO. FT 928-000-006
DRAWING NO. S-3
SHEET NO. 85 OF 188

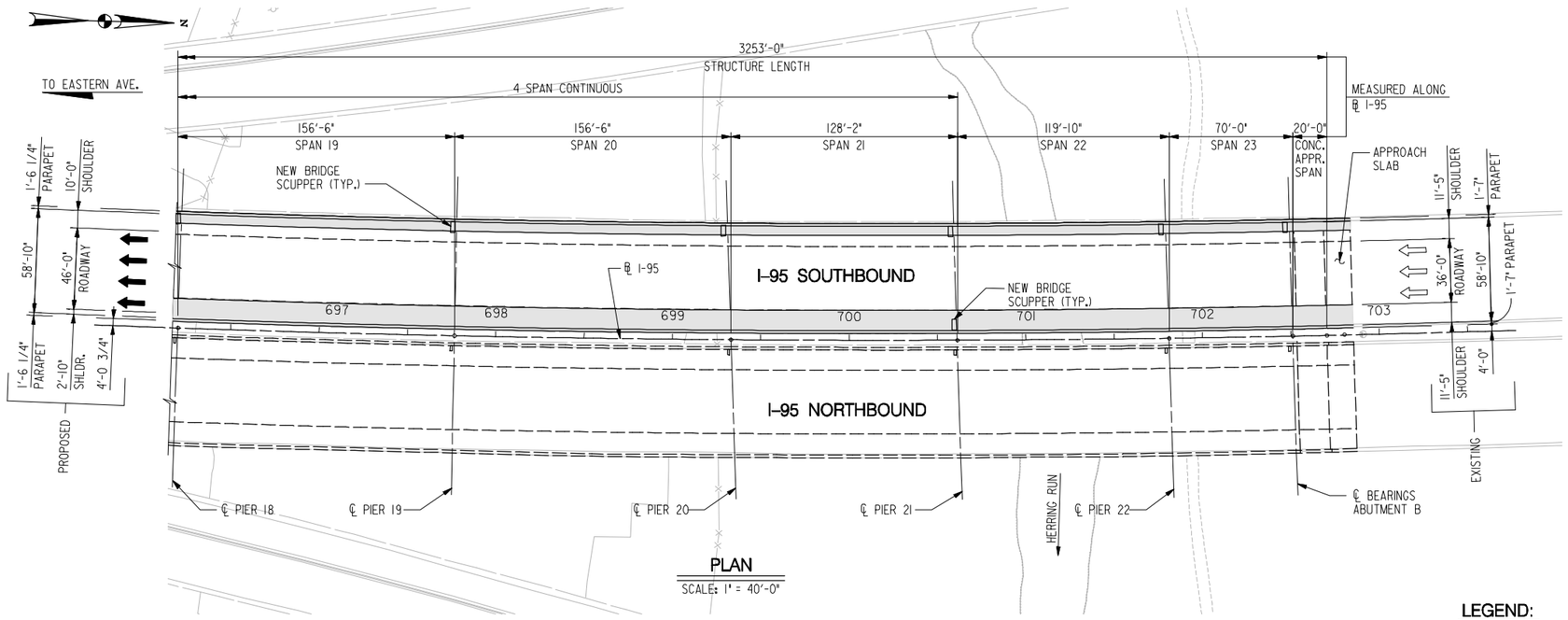

PLAN

SCALE: 1" = 40'-0"

LEGEND:

INDICATES LIMITS OF WORK

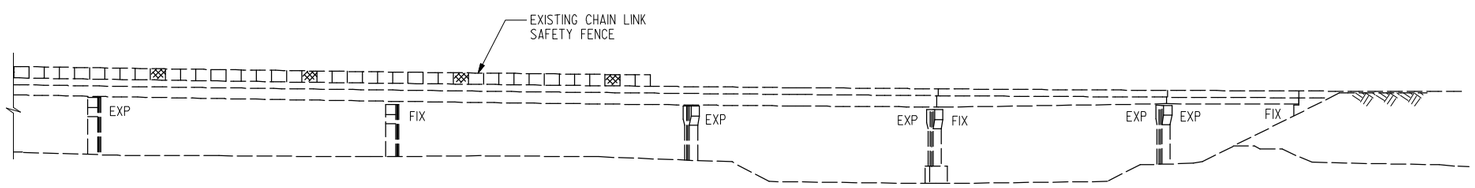

ELEVATION

SCALE: 1" = 40'-0"

NOTE:
FOR GENERAL NOTES, SEE DWG NO. S-1.

RK&K
81 MOSHER STREET | BALTIMORE, MD 21217
PH: (410) 728-2900 FAX: (410) 728-3180
Engineers Construction Managers Planners Scientists
www.rkk.com

ALA
ATHAVALE, LYSTAD & ASSOCIATES INC.
Consulting Engineers Rockville, Maryland

MARYLAND TRANSPORTATION AUTHORITY
Engineering Division

ADDENDUMS & REVISIONS			
NO.	DESCRIPTION	BY	DATE

I-95 FROM MORAVIA ROAD TO THE FORT McHENRY TUNNEL - PHASE 1 - SOUTHBOUND

I-95 (BALTIMORE CITY)
BRIDGE NO. BCW 596-2 - I-95 S.B. OVER CANTON RAILROAD TO HERRING RUN
GENERAL PLAN AND ELEVATION - 4

DESIGNED BY K.A.	DRAWN BY J.E.	CHECKED BY D.W.
CONST. REVIEW BY	DATE DECEMBER 2009	SCALE AS SHOWN

CONTRACT NO. FT 928-000-006
DRAWING NO. **S-4**
SHEET NO. 86 OF 188

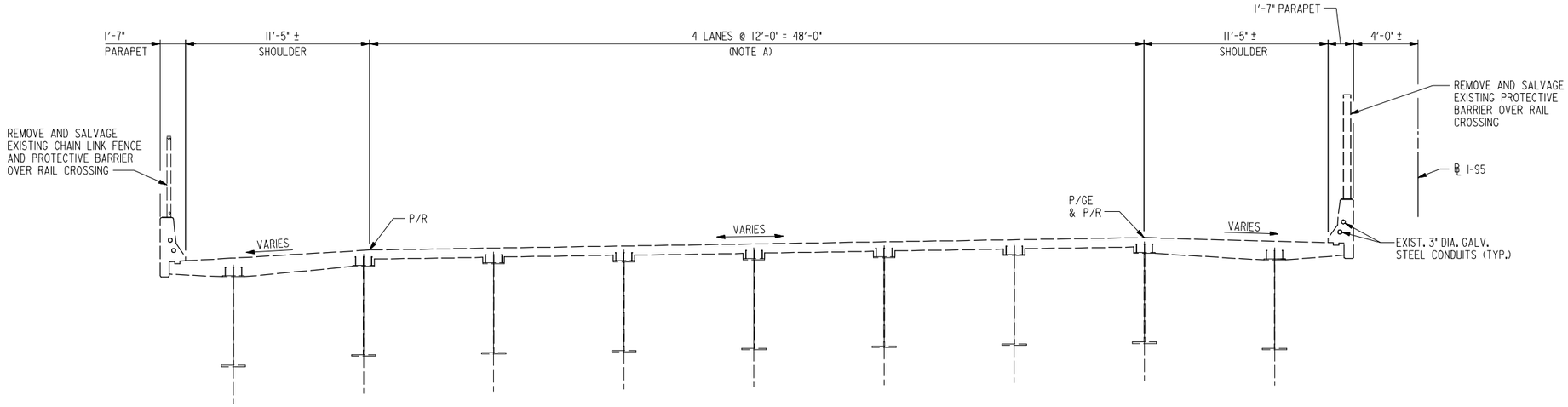

EXISTING SECTION

SCALE: 1/4" = 1'-0"

(LOOKING NORTH)
SPANS 1 TO 15

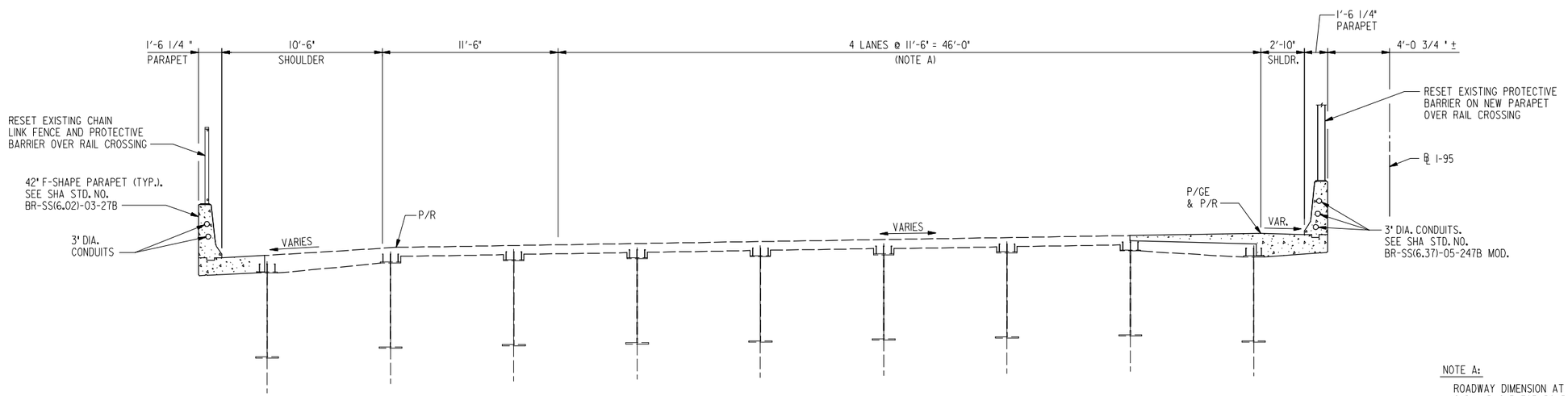

NOTE A:

ROADWAY DIMENSION AT SPANS 9 TO 15 VARIES. SEE DWG NOS. S-2 AND S-3 FOR ROADWAY CONFIGURATION.

LEGEND:

INDICATES NEW CONSTRUCTION

PROPOSED SECTION

SCALE: 1/4" = 1'-0"

(LOOKING NORTH)
SPANS 1 TO 15

RK&K
81 MOSHER STREET | BALTIMORE, MD 21217
PH: (410) 728-2900 FAX: (410) 728-3180
Engineers Construction Managers Planners Scientists
www.rkk.com

ALA
ATHAVALE, LYSTAD & ASSOCIATES INC.
Consulting Engineers Rockville, Maryland

MARYLAND TRANSPORTATION AUTHORITY
Engineering Division

ADDENDUMS & REVISIONS

NO.	DESCRIPTION	BY	DATE

I-95 FROM MORAVIA ROAD TO THE FORT McHENRY TUNNEL - PHASE 1 - SOUTHBOUND

I-95 (BALTIMORE CITY)
BRIDGE NO. BCW 596-2 - I-95 S.B. OVER CANTON RAILROAD TO HERRING RUN
EXISTING AND PROPOSED SECTIONS - 1

DESIGNED BY K.A.	DRAWN BY J.E.	CHECKED BY D.W.	
CONST. REVIEW BY	DATE DECEMBER 2009	SCALE AS SHOWN	

CONTRACT NO. FT 928-000-006

DRAWING NO. **S-5**

SHEET NO. 87 OF 188

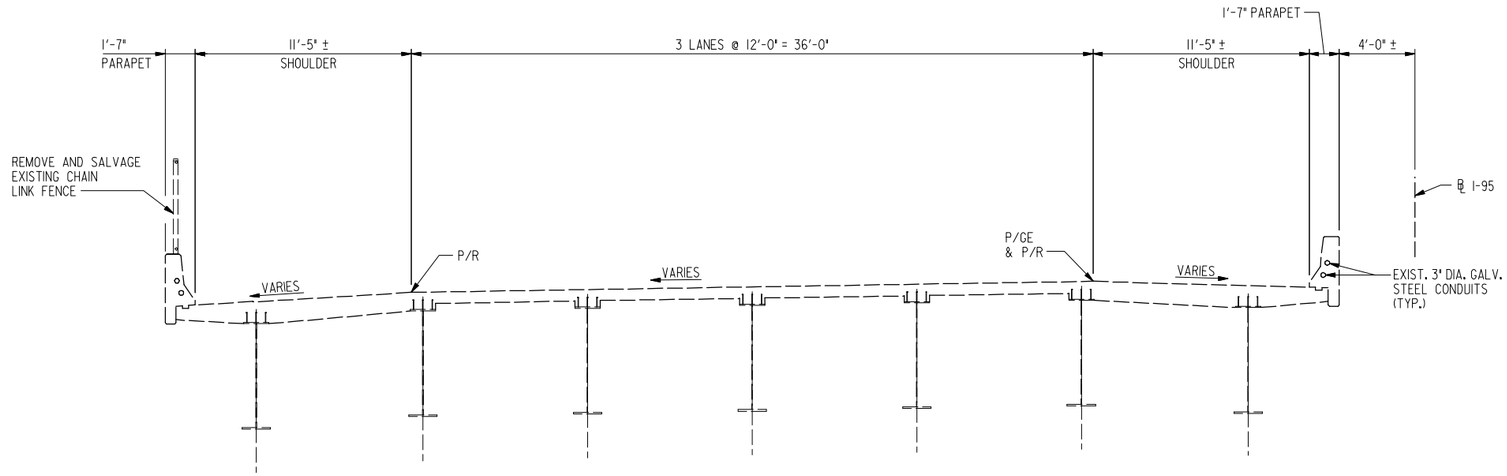

EXISTING SECTION

SCALE: 1/4" = 1'-0"

(LOOKING NORTH)
SPANS 16 TO 23

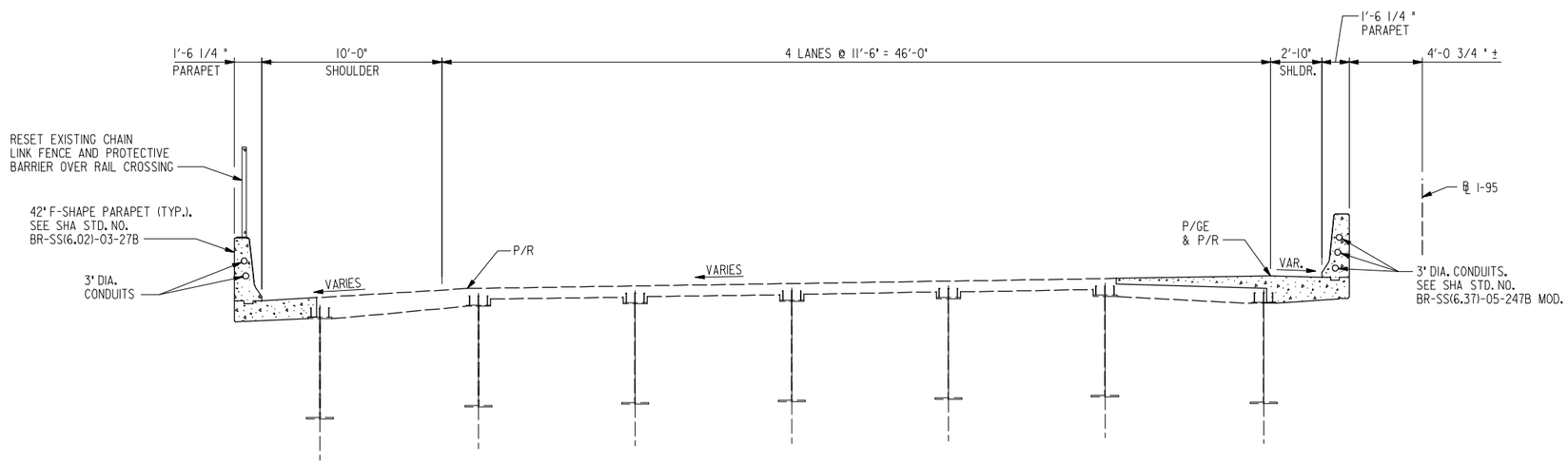

LEGEND:

INDICATES NEW CONSTRUCTION

PROPOSED SECTION

SCALE: 1/4" = 1'-0"

(LOOKING NORTH)
SPANS 16 TO 23

RK&K
81 MOSHER STREET | BALTIMORE, MD 21217
PH: (410) 728-2900 FAX: (410) 728-3180
Engineers Construction Managers Planners Scientists
www.rkk.com

ALA
ATHAVALE, LYSTAD & ASSOCIATES INC.
Consulting Engineers Rockville, Maryland

MARYLAND TRANSPORTATION AUTHORITY
Engineering Division

ADDENDUMS & REVISIONS

NO.	DESCRIPTION	BY	DATE

I-95 FROM MORAVIA ROAD TO THE FORT McHENRY TUNNEL - PHASE 1 - SOUTHBOUND

I-95 (BALTIMORE CITY)
BRIDGE NO. BCW 596-2 - I-95 S.B. OVER CANTON RAILROAD TO HERRING RUN
EXISTING AND PROPOSED SECTIONS - 2

DESIGNED BY K.A.	DRAWN BY J.E.	CHECKED BY D.W.	CONTRACT NO. FT 928-000-006
CONST. REVIEW BY	DATE DECEMBER 2009	SCALE AS SHOWN	DRAWING NO. S-6
			SHEET NO. 88 OF 188

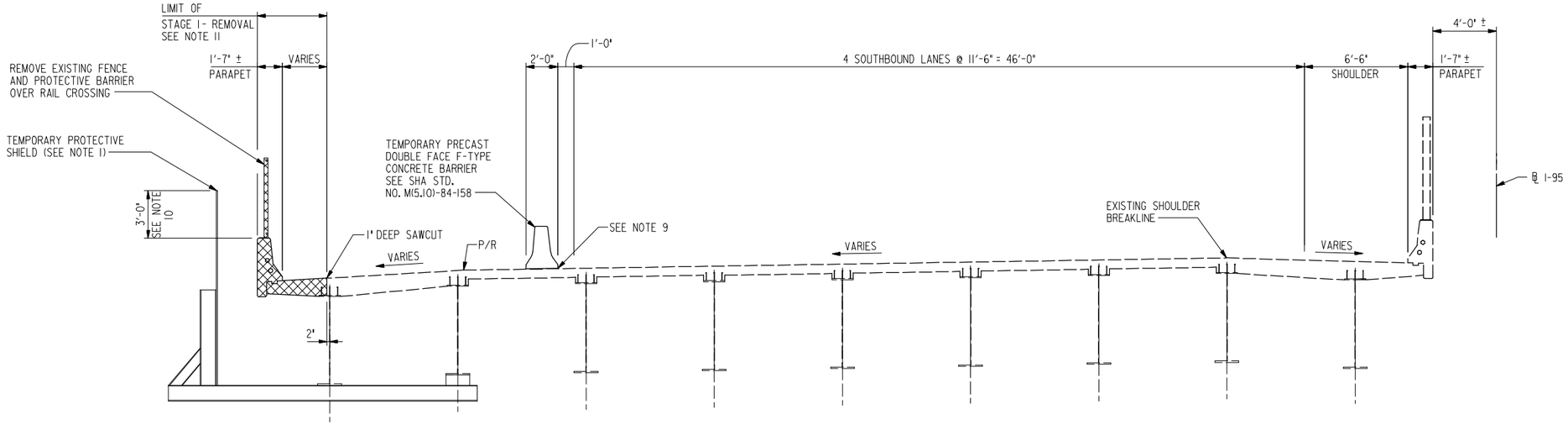

STAGE 1 – REMOVAL

SCALE: 1/4" = 1'-0"

(LOOKING NORTH)
SPANS 1 TO 13

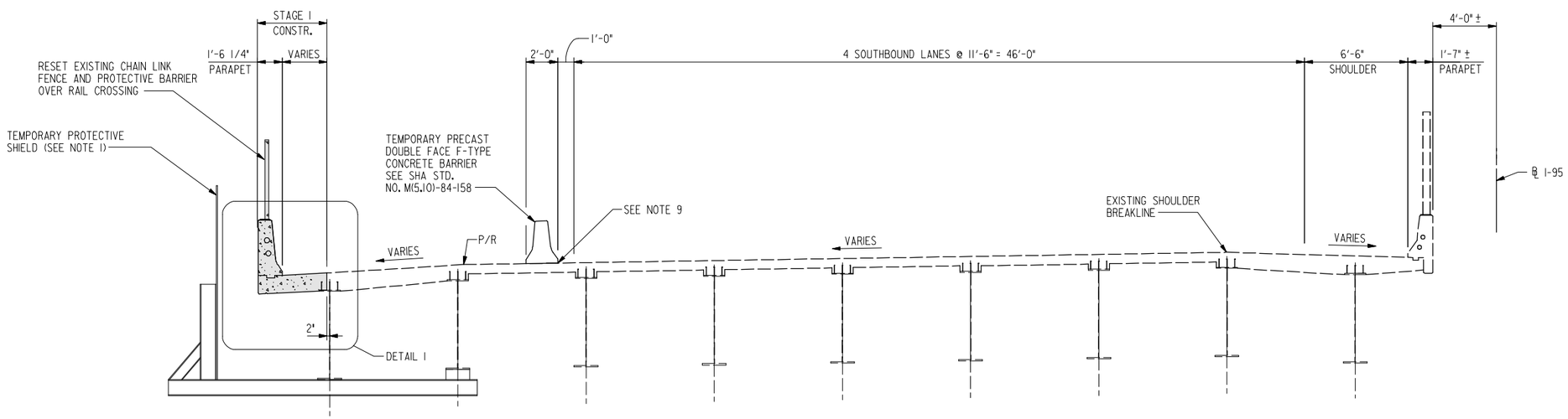

STAGE 1 – CONSTRUCTION

SCALE: 1/4" = 1'-0"

(LOOKING NORTH)
SPANS 1 TO 13

NOTES:

1. CONTRACTOR SHALL PROVIDE TEMPORARY PROTECTIVE SHIELDS AT THE LOCATIONS SHOWN UNTIL THE FORMWORK FOR THE CONCRETE DECK OVERHANG AND WORKER SAFETY RAILING IS COMPLETE AND IN PLACE. AT NO TIME SHALL WORK BE PERFORMED BEYOND OR BELOW THE EDGE OF THE BRIDGE DECK WITHOUT SOME FORM OF SHIELDING BEING IN PLACE. ALLOWING DEBRIS TO FALL TO THE GRADE BENEATH THE BRIDGE AT ANY LOCATION IS PROHIBITED.

   FOR THE MEDIAN OVERHANG AREA DIRECTLY OVER ENERGIZED RAILROAD TRACKS, THE CONTRACTOR MAY ELECT TO CONSTRUCT PROTECTIVE DECKING BETWEEN NORTHBOUND AND SOUTHBOUND BRIDGE FASCIA GIRDERS AS AN ALTERNATE TO THE PROTECTIVE SHIELD AS OUTLINED IN THE CONTRACT DOCUMENTS. FOR THE EXTERIOR OVERHANG AREA DIRECTLY OVER ENERGIZED RAILROAD TRACKS, THE CONTRACTOR MAY INCORPORATE THE BRIDGE OVERHANG FORMWORK BRACKETS TO PROVIDE PROTECTION AND MAKE ADDITIONAL PROVISIONS ACCEPTABLE TO THE RAILROAD FOR VERTICAL PROTECTION. CONTRACTOR SHALL MAINTAIN A MIN. 23'-0" VERTICAL CLEARANCE OVER RAILROAD TRACKS AT ALL TIMES INCLUDING DURING INSTALLATION OF THE PROTECTIVE SHIELD.

   CONTRACTOR SHALL DESIGN AND DETAIL ALL PROTECTIVE SHIELDS AND SUBMIT SHOP DRAWINGS TO THE ENGINEER AND, AS NECESSARY, TO THE RAILROADS FOR APPROVAL. COST FOR TEMPORARY PROTECTIVE SHIELDS SHALL BE CONSIDERED INCIDENTAL TO THE LUMP SUM COST FOR REMOVAL OF PORTION OF EXISTING STRUCTURES. THE DESIGN LOAD SHALL BE 150 PSF.

2. CONTRACTOR SHALL PROTECT EXISTING REINFORCEMENT THAT WILL BE INCORPORATED INTO THE NEW STRUCTURE. WORK SHALL CONFORM TO SECTION 421.03.07 OF SHA SPECIFICATIONS.

3. EXISTING DECK REMOVAL SHALL CONFORM TO SECTION 405.03.02 OF THE SPECIFICATIONS.

4. BEFORE REMOVAL OPERATIONS BEGIN, CONTRACTOR SHALL LOCATE THE EDGE OF THE TOP FLANGES OR COVER PLATES OF THE EXTERIOR BEAM AS SPECIFIED IN SECTION 405. UNDER NO CIRCUMSTANCES SHALL SAWCUTS DEEPER THAN 1" BE PERMITTED WITHIN 6" FROM THE EDGE OF THE TOP FLANGES OR COVER PLATES OR 1'-4" FROM CENTERLINE OF EXTERIOR BEAM, WHICHEVER IS LARGER. SAWCUTTING SHALL ONLY BE ALLOWED AS SPECIFIED IN THESE PLANS. FOR REMOVAL DETAILS AND ADDITIONAL REMOVAL NOTES, SEE DWG NOS. S-8 AND S-9.

5. REMOVAL AND CONSTRUCTION LIMITS FOR STAGE 1 ON SPANS 14 AND 15 IS SAME, EXCEPT THE ROADWAY WIDTH VARIES TO INCLUDE GORE AREA AT RAMP A. SEE MAINTENANCE OF TRAFFIC PLANS FOR ADDITIONAL INFORMATION.

6. FOR DETAIL 1, SEE DWG NO. S-11.

7. CONTRACTOR SHALL COORDINATE THE REMOVAL AND CONSTRUCTION WORK WITH THE TRAFFIC CONTROL PLANS.

8. THE CONTRACTOR IS HEREBY MADE AWARE OF A FIRE ALARM SYSTEM MOUNTED TO THE UNDERSIDE OF THE BRIDGE SUPERSTRUCTURE IN SPANS 13 THRU 17. CONTRACTOR SHALL ENSURE THAT THE ALARM SYSTEM IS MAINTAINED THROUGHOUT CONSTRUCTION AND, IF DAMAGED IN ANY WAY BY CONSTRUCTION ACTIVITIES, SHALL BE REPAIRED IMMEDIATELY AT THE CONTRACTOR'S EXPENSE. SEE GENERAL NOTE 19 ON SHEET GN-01.

9. CONTRACTOR SHALL SEAL BOTTOM OF TEMPORARY BARRIER DURING THE STAGE 1 WORK TO PREVENT DRAINAGE RUN-OFF FROM THE BRIDGE DECK WITHIN THE LIMITS OF THE RAILROAD RIGHT-OF-WAY.

10. THE 3'-0" DIMENSION SHALL BE INCREASED TO 6'-6" FOR SPANS OVER THE RAILROAD TRACKS.

11. REMOVAL OF EXISTING DECK IN THIS AREA SHALL BE DONE USING HAND TOOLS OR POWER DRIVEN HAND TOOLS ONLY.

LEGEND:

INDICATES PORTION OF EXISTING STRUCTURE TO BE REMOVED.

INDICATES NEW CONSTRUCTION

RK&K
81 MOSHER STREET | BALTIMORE, MD 21217
PH: (410) 728-2900 FAX: (410) 728-3160
Engineers Construction Managers Planners Scientists
www.rkk.com

ALA
ATHAVALE, LYSTAD & ASSOCIATES INC.
Consulting Engineers Rockville, Maryland

MARYLAND TRANSPORTATION AUTHORITY
Engineering Division

ADDENDUMS & REVISIONS

NO.	DESCRIPTION	BY	DATE

I-95 FROM MORAVIA ROAD TO THE FORT McHENRY TUNNEL - PHASE 1 - SOUTHBOUND

I-95 (BALTIMORE CITY)
BRIDGE NO. BCW 596-2 - I-95 S.B. OVER CANTON RAILROAD TO HERRING RUN
SEQUENCE OF CONSTRUCTION - 1

DESIGNED BY K.A.	DRAWN BY J.E.	CHECKED BY D.W.	
CONST. REVIEW BY	DATE DECEMBER 2009	SCALE AS SHOWN	

CONTRACT NO. FT 928-000-006

DRAWING NO. S-7

SHEET NO. 89 OF 188

NOTES:

1. FOR DETAIL 1, SEE DWG NO. S-11.
2. REMOVAL OF EXISTING DECK IN THIS AREA SHALL BE DONE USING HAND TOOLS OR POWER DRIVEN HAND TOOLS ONLY.
3. FOR ADDITIONAL NOTES, SEE DWG NO. S-7.

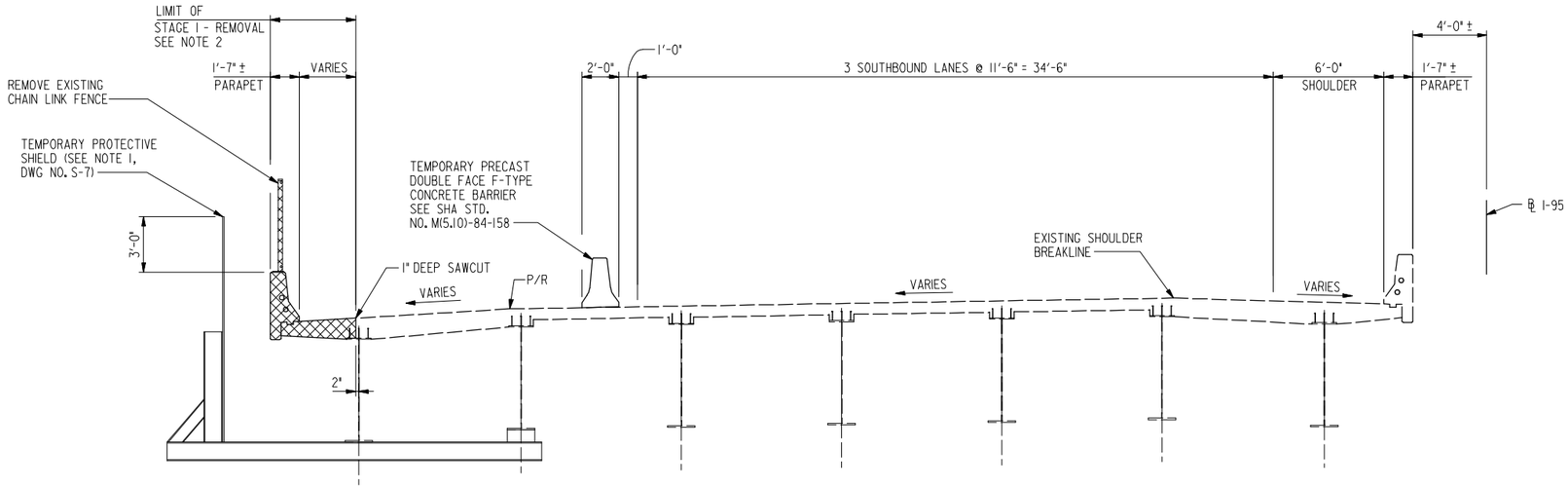

STAGE 1 - REMOVAL

SCALE: 1/4" = 1'-0"

(LOOKING NORTH)
SPANS 16 TO 23

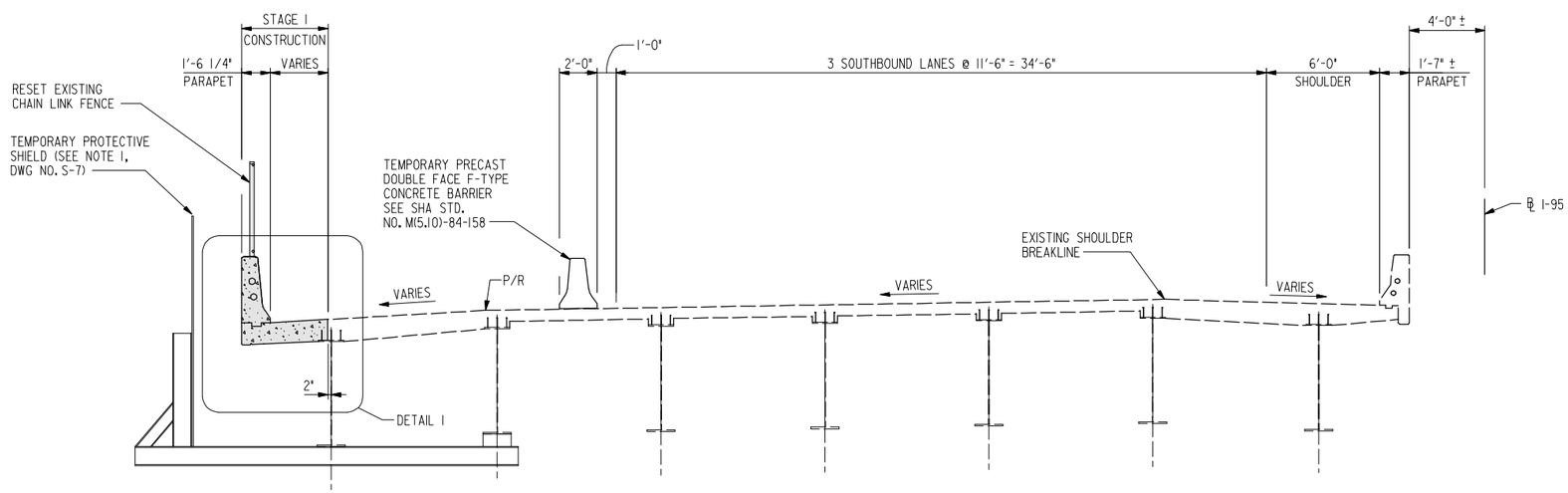

STAGE 1 - CONSTRUCTION

SCALE: 1/4" = 1'-0"

(LOOKING NORTH)
SPANS 16 TO 23

LEGEND:

INDICATES PORTION OF EXISTING STRUCTURE TO BE REMOVED.

INDICATES NEW CONSTRUCTION

RK&K
81 MOSHER STREET | BALTIMORE, MD 21217
PH: (410) 728-2900 FAX: (410) 728-3180
Engineers Construction Managers Planners Scientists
www.rkk.com

ALA
ATHAVALE, LYSTAD & ASSOCIATES INC.
Consulting Engineers Rockville, Maryland

MARYLAND TRANSPORTATION AUTHORITY
Engineering Division

ADDENDUMS & REVISIONS

NO.	DESCRIPTION	BY	DATE

I-95 FROM MORAVIA ROAD TO THE FORT McHENRY TUNNEL - PHASE 1 - SOUTHBOUND

I-95 (BALTIMORE CITY)

BRIDGE NO. BCW 596-2 - I-95 S.B. OVER CANTON RAILROAD TO HERRING RUN

SEQUENCE OF CONSTRUCTION - 2

DESIGNED BY K.A.	DRAWN BY J.E.	CHECKED BY D.W.	
CONST. REVIEW BY	DATE DECEMBER 2009	SCALE AS SHOWN	

CONTRACT NO. FT 928-000-006

DRAWING NO. S-8

SHEET NO. 90 OF 188

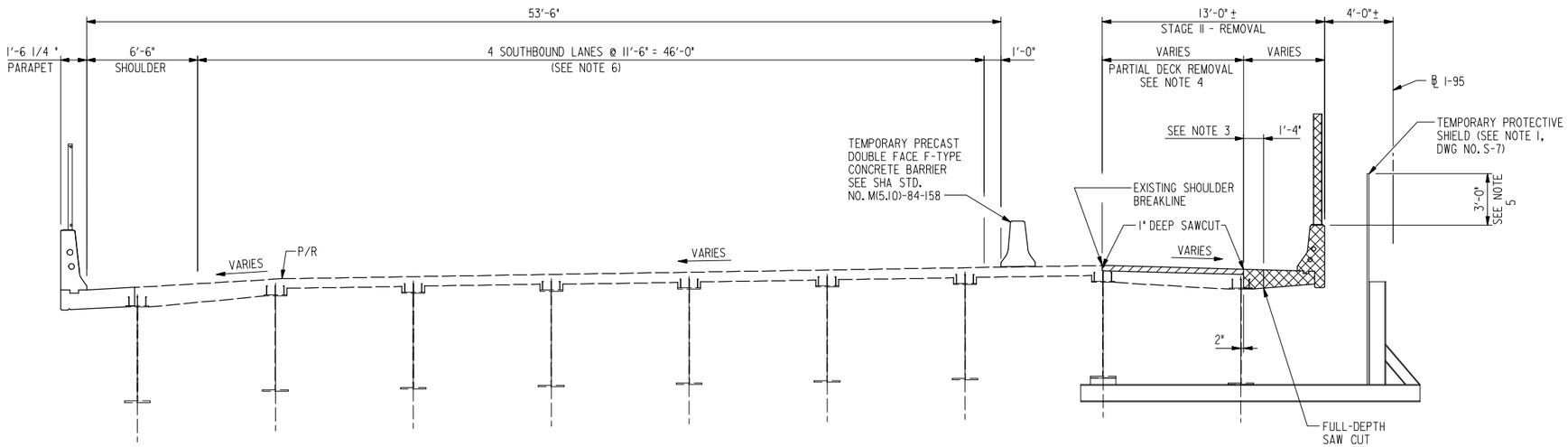

STAGE II – REMOVAL

SCALE: 1/4" = 1'-0"

(LOOKING NORTH)
SPANS 1 TO 15

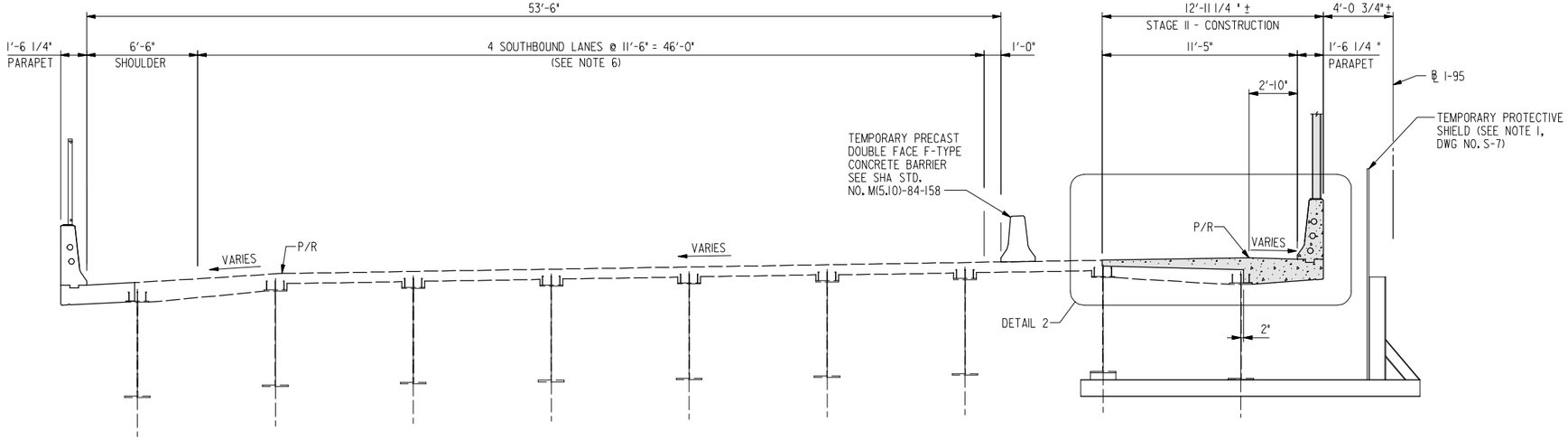

STAGE II – CONSTRUCTION

SCALE: 1/4" = 1'-0"

(LOOKING NORTH)
SPANS 1 TO 15

NOTES:

1. FOR DETAIL 2, SEE DWG NO. S-11.
2. FOR ADDITIONAL REMOVAL NOTES, SEE DWG NO. S-7.
3. REMOVAL OF EXISTING DECK IN THIS AREA SHALL BE DONE USING HAND TOOLS OR POWER DRIVEN HAND TOOLS ONLY.
4. CONTRACTOR SHALL REMOVE DECK SLAB TO A DEPTH OF 1" BELOW THE TOP DECK REINFORCING STEEL MAT. SEE SPECIAL PROVISIONS FOR DECK SURFACE REMOVAL METHODS.
5. THE 3'-0" DIMENSION SHALL BE INCREASED TO 6'-6" FOR SPANS OVER THE RAILROAD TRACKS.
6. ROADWAY DIMENSION AT SPANS 9 TO 15 VARIES. SEE DWG. NOS. S-2 AND S-3 FOR ROADWAY CONFIGURATION.

LEGEND:

- INDICATES PORTION OF EXISTING DECK TO BE PARTIALLY REMOVED
- INDICATES PORTION OF EXISTING STRUCTURE TO BE REMOVED
- INDICATES NEW CONSTRUCTION

RK&K
81 MOSHER STREET | BALTIMORE, MD 21217
PH: (410) 728-2900 FAX: (410) 728-3180
Engineers Construction Managers Planners Scientists
www.rkk.com

ALA
ATHAVALE, LYSTAD & ASSOCIATES INC.
Consulting Engineers Rockville, Maryland

MARYLAND TRANSPORTATION AUTHORITY
Engineering Division

ADDENDUMS & REVISIONS			
NO.	DESCRIPTION	BY	DATE

I-95 FROM MORAVIA ROAD TO THE FORT McHENRY TUNNEL - PHASE 1 - SOUTHBOUND

I-95 (BALTIMORE CITY)
BRIDGE NO. BCW 596-2 - I-95 S.B. OVER CANTON RAILROAD TO HERRING RUN
SEQUENCE OF CONSTRUCTION - 3

DESIGNED BY K.A.	DRAWN BY J.E.	CHECKED BY D.W.	
CONST. REVIEW BY	DATE DECEMBER 2009	SCALE AS SHOWN	

CONTRACT NO. FT 928-000-006
DRAWING NO. S-9
SHEET NO. 91 OF 188

NOTES:

1. FOR DETAIL 2, SEE DWG NO. S-11.
2. FOR ADDITIONAL REMOVAL NOTES, SEE DWG NO. S-7.
3. REMOVAL OF EXISTING DECK IN THIS AREA SHALL BE DONE USING HAND TOOLS OR POWER DRIVEN HAND TOOLS.
4. CONTRACTOR SHALL REMOVE DECK SLAB WITHIN THE LIMITS SHOWN TO A DEPTH OF 1" BELOW THE TOP DECK REINFORCING STEEL MAT. SEE SPECIAL PROVISIONS FOR DECK SURFACE REMOVAL METHODS.

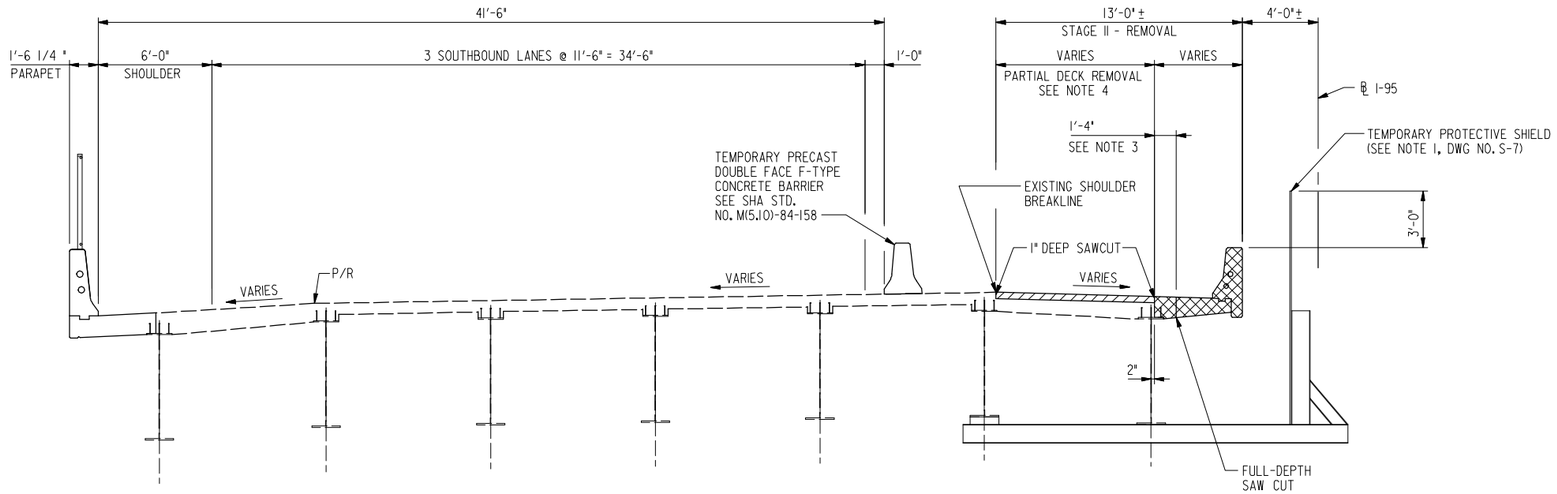

STAGE II – REMOVAL

SCALE: 1/4" = 1'-0"

(LOOKING NORTH)
SPANS 16 TO 23

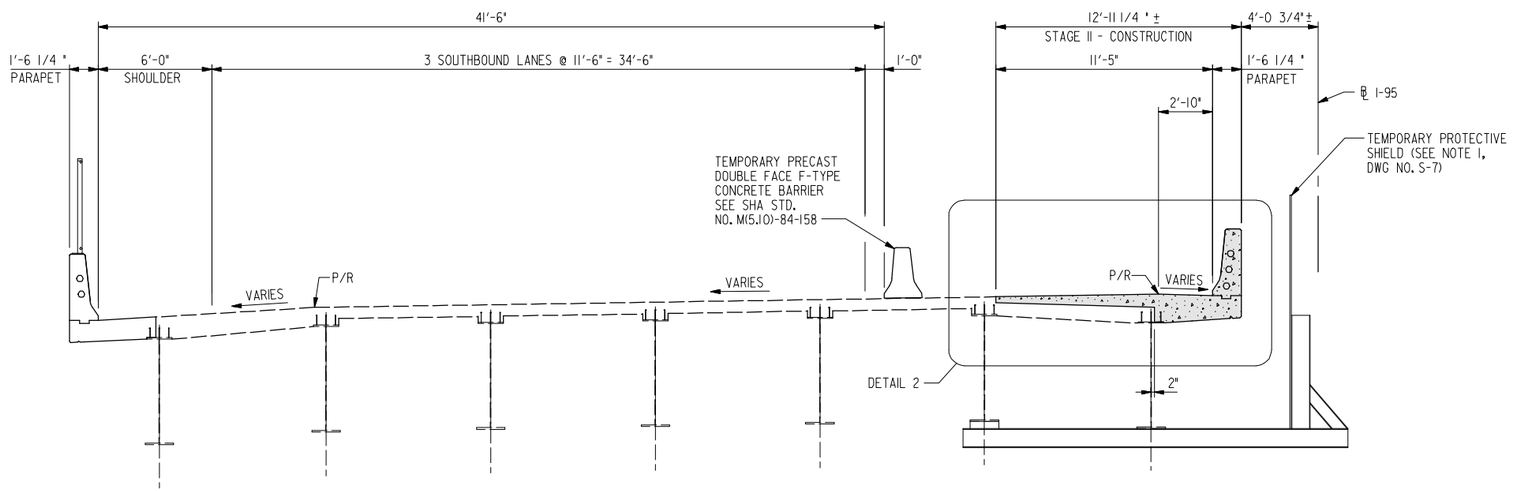

STAGE II – CONSTRUCTION

SCALE: 1/4" = 1'-0"

(LOOKING NORTH)
SPANS 16 TO 23

LEGEND:

- INDICATES PORTION OF EXISTING DECK TO BE PARTIALLY REMOVED
- INDICATES PORTION OF EXISTING STRUCTURE TO BE REMOVED.
- INDICATES NEW CONSTRUCTION

RK&K
81 MOSHER STREET | BALTIMORE, MD 21217
PH: (410) 728-2900 FAX: (410) 728-3180
Engineers Construction Managers Planners Scientists
www.rkk.com

ALA
ATHAVALE, LYSTAD & ASSOCIATES INC.
Consulting Engineers Rockville, Maryland

MARYLAND TRANSPORTATION AUTHORITY
Engineering Division

ADDENDUMS & REVISIONS			
NO.	DESCRIPTION	BY	DATE

I-95 FROM MORAVIA ROAD TO THE FORT McHENRY TUNNEL - PHASE 1 - SOUTHBOUND
I-95 (BALTIMORE CITY)
BRIDGE NO. BCW 596-2 - I-95 S.B. OVER CANTON RAILROAD TO HERRING RUN
SEQUENCE OF CONSTRUCTION - 4

DESIGNED BY K.A.	DRAWN BY J.E.	CHECKED BY D.W.
CONST. REVIEW BY	DATE DECEMBER 2009	SCALE AS SHOWN

CONTRACT NO. FT 928-000-006
DRAWING NO. S-10
SHEET NO. 92 OF 188

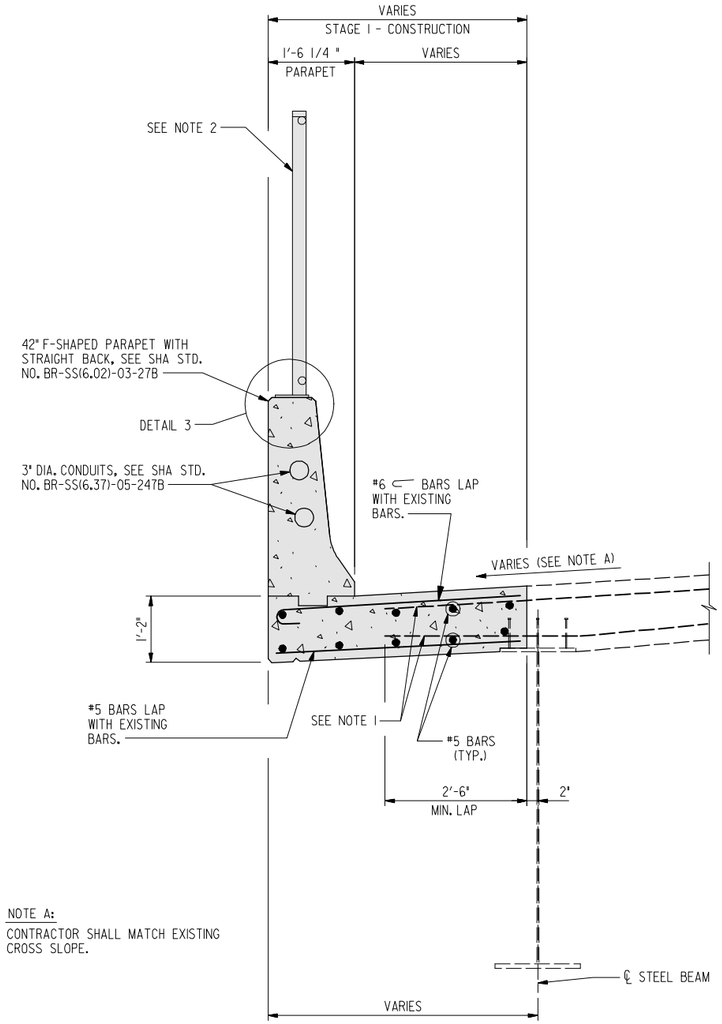

NOTE A:

CONTRACTOR SHALL MATCH EXISTING CROSS SLOPE.

DETAIL 1

SCALE: 3/4" = 1'-0"

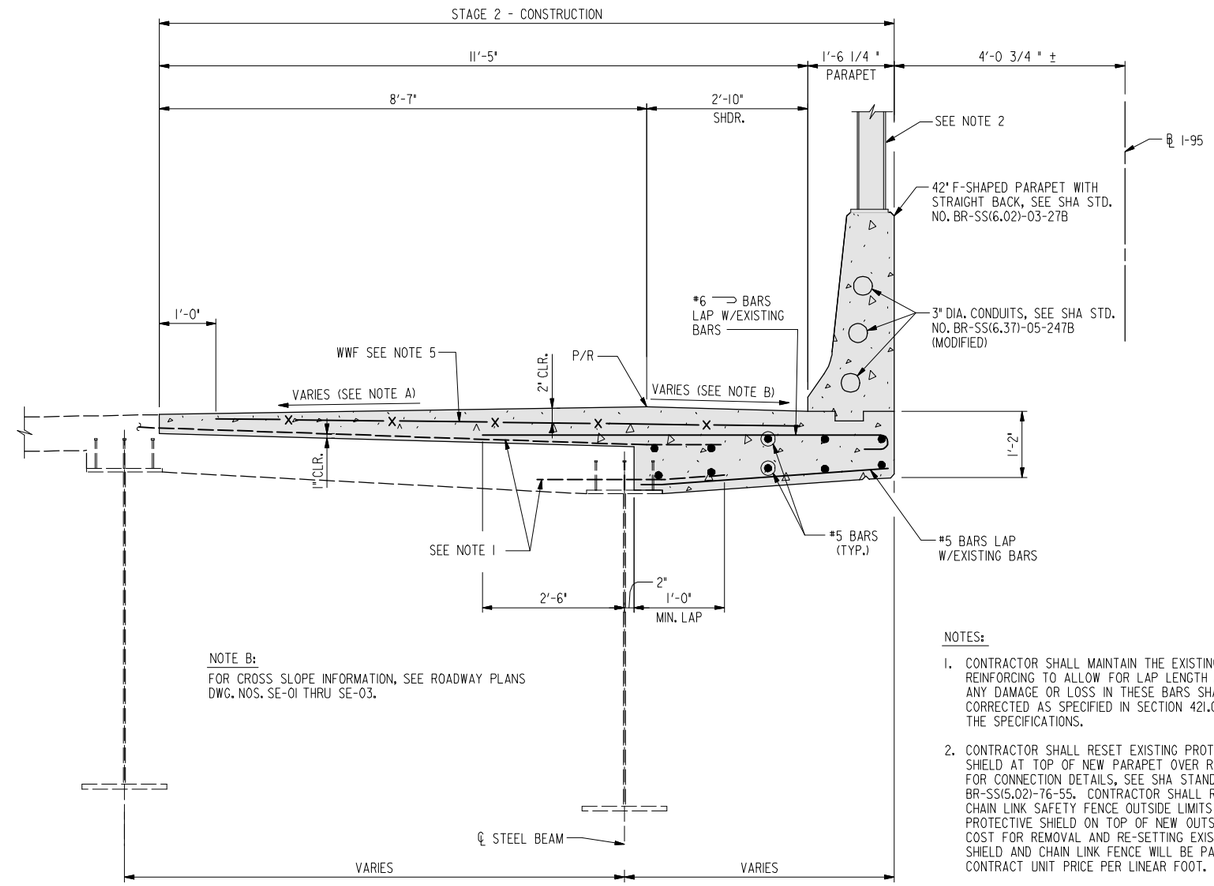

NOTE B:

FOR CROSS SLOPE INFORMATION, SEE ROADWAY PLANS DWG. NOS. SE-01 THRU SE-03.

DETAIL 2

SCALE: 3/4" = 1'-0"

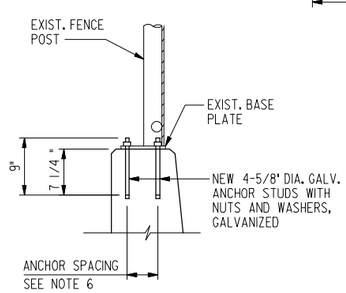

DETAIL 3

SCALE: 1" = 1'-0"

NOTES:

1. CONTRACTOR SHALL MAINTAIN THE EXISTING DECK REINFORCING TO ALLOW FOR LAP LENGTH AS SHOWN. ANY DAMAGE OR LOSS IN THESE BARS SHALL BE CORRECTED AS SPECIFIED IN SECTION 421.03.07 OF THE SPECIFICATIONS.
2. CONTRACTOR SHALL RESET EXISTING PROTECTIVE SHIELD AT TOP OF NEW PARAPET OVER RAIL CROSSING. FOR CONNECTION DETAILS, SEE SHA STANDARD NUMBER BR-SS(5.02)-76-55. CONTRACTOR SHALL RESET EXISTING CHAIN LINK SAFETY FENCE OUTSIDE LIMITS OF THE PROTECTIVE SHIELD ON TOP OF NEW OUTSIDE PARAPET. COST FOR REMOVAL AND RE-SETTING EXISTING PROTECTIVE SHIELD AND CHAIN LINK FENCE WILL BE PAID FOR AT THE CONTRACT UNIT PRICE PER LINEAR FOOT.
3. ALL REINFORCING BARS, INCLUDING WWF, IN DECK REPLACEMENT SHALL BE EPOXY COATED.
4. FOR CONCRETE SPECIFICATIONS, SEE GENERAL NOTES.
5. CONTRACTOR MAY USE WELDED WIRE FABRIC (WWF) 6x6-W7.0xW7.0 OR #4 BARS @ 6" C/C IN BOTH DIRECTIONS.
6. CONTRACTOR SHALL USE THE EXISTING FENCE BASE PLATE AS A TEMPLATE TO LOCATE AND SET THE 5/8" DIA. ANCHORS IN TOP OF THE NEW PARAPET. MAINTAIN EXISTING FENCE POST SPACING.
7. EXPOSED EXISTING REINFORCING BARS TO REMAIN SHALL BE THOROUGHLY CLEANED AND TOUCH UP WITH EPOXY COATED.

LEGEND:

INDICATES NEW CONSTRUCTION

RK&K
81 MOSHER STREET | BALTIMORE, MD 21217
PH: (410) 728-2900 FAX: (410) 728-3180
Engineers Construction Managers Planners Scientists
www.rkk.com

ALA
ATHAVALE, LYSTAD & ASSOCIATES INC.
Consulting Engineers Rockville, Maryland

MARYLAND TRANSPORTATION AUTHORITY
Engineering Division

ADDENDUMS & REVISIONS			
NO.	DESCRIPTION	BY	DATE

I-95 FROM MORAVIA ROAD TO THE FORT McHENRY TUNNEL - PHASE 1 - SOUTHBOUND

I-95 (BALTIMORE CITY)
BRIDGE NO. BCW 596-2 - I-95 S.B. OVER CANTON RAILROAD TO HERRING RUN
DECK REINFORCING DETAILS

DESIGNED BY K.A. | DRAWN BY J.E. | CHECKED BY D.W.
CONST. REVIEW BY | DATE DECEMBER 2009 | SCALE AS SHOWN

CONTRACT NO. FT 928-000-006
DRAWING NO. S-11
SHEET NO. 93 OF 188

FILE: r:\49562\dgn\SB\proj\596_S-11_Deck Reinforcing Details.dgn
DATE: Friday, December 04, 2009 AT 02:57 PM

NOTES:

1. COST FOR TRANSITION IN PARAPET SHALL BE INCLUDED IN THE CONTRACT LUMP SUM PRICE FOR CONCRETE PARAPET.
2. CONTRACTOR SHALL MAINTAIN THE EXISTING PARAPET REINFORCING TO ALLOW FOR BAR LAP OF 2'-0" MIN. WITH NEW BARS IN TRANSITION PARAPET.
3. FOR LOCATION OF DETAILS A AND B, SEE DWG NO. S-3.

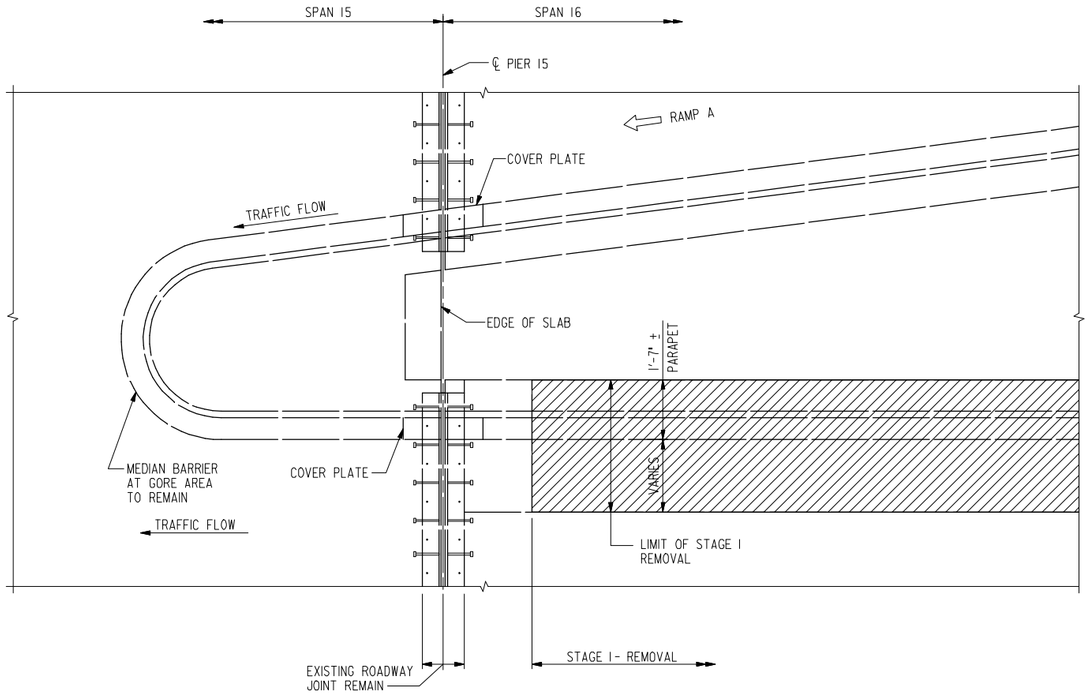

DETAIL A

SCALE: 1/2" = 1'-0"

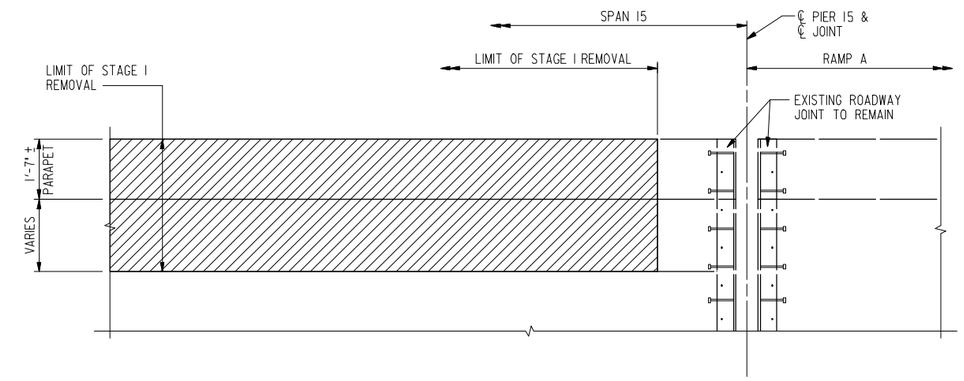

DETAIL B

SCALE: 1/2" = 1'-0"

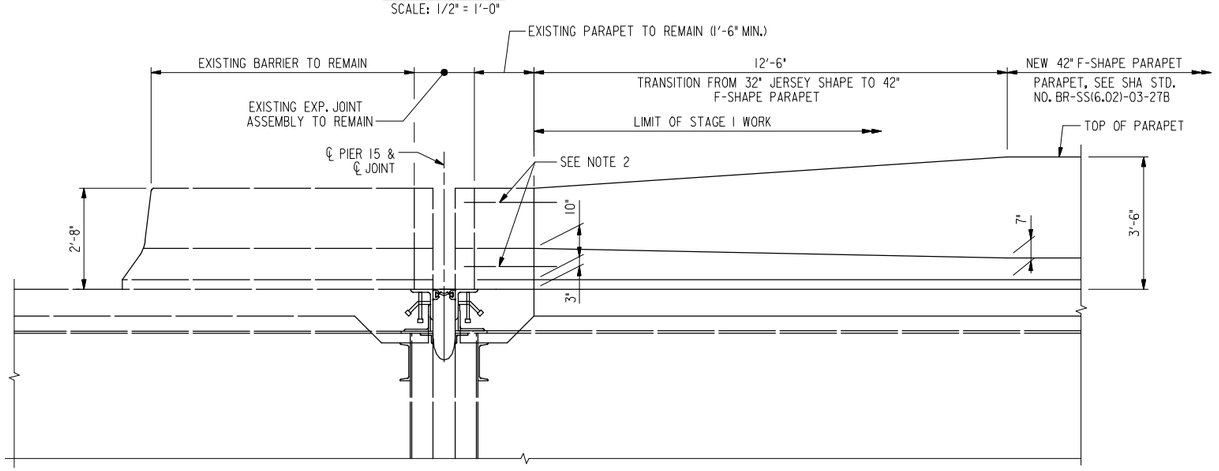

DETAIL A ELEVATION – STAGE I CONSTRUCTION

SCALE: 1/2" = 1'-0"

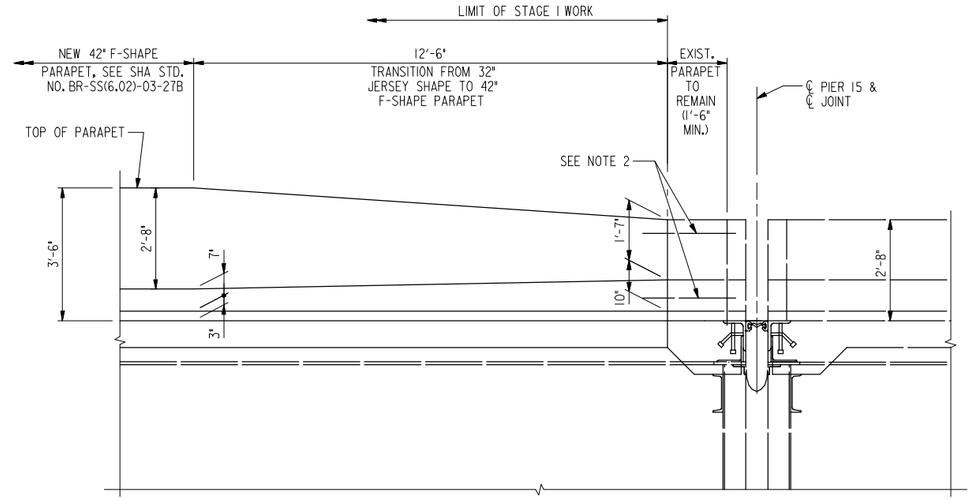

DETAIL B ELEVATION – STAGE I CONSTRUCTION

SCALE: 1/2" = 1'-0"

RK&K
81 MOSHER STREET | BALTIMORE, MD 21217
PH: (410) 728-2900 FAX: (410) 728-3180
Engineers Construction Managers Planners Scientists
www.rkk.com

ALA
ATHAVALE, LYSTAD & ASSOCIATES INC.
Consulting Engineers Rockville, Maryland

MARYLAND TRANSPORTATION AUTHORITY
Engineering Division

ADDENDUMS & REVISIONS			
NO.	DESCRIPTION	BY	DATE

I-95 FROM MORAVIA ROAD TO THE FORT McHENRY TUNNEL - PHASE 1 - SOUTHBOUND

I-95 (BALTIMORE CITY)
BRIDGE NO. BCW 596-2 - I-95 S.B. OVER CANTON RAILROAD TO HERRING RUN
PARAPET TRANSITION DETAILS

DESIGNED BY K.A.	DRAWN BY J.E.	CHECKED BY D.W.	
CONST. REVIEW BY	DATE DECEMBER 2009	SCALE AS SHOWN	

CONTRACT NO. FT 928-000-006
DRAWING NO. **S-12**
SHEET NO. 94 OF 188

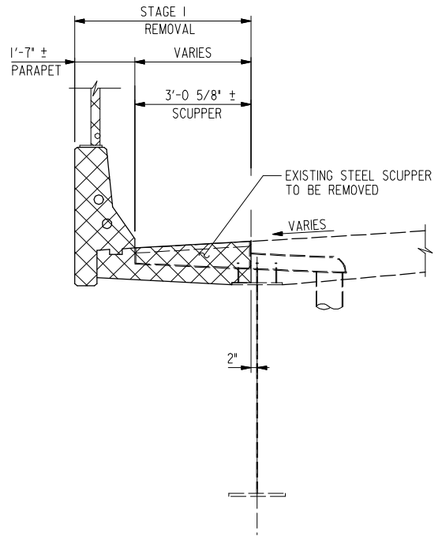

STAGE I – REMOVAL AT SCUPPERS

SCALE: 1/2" = 1'-0"
(LOOKING NORTH)

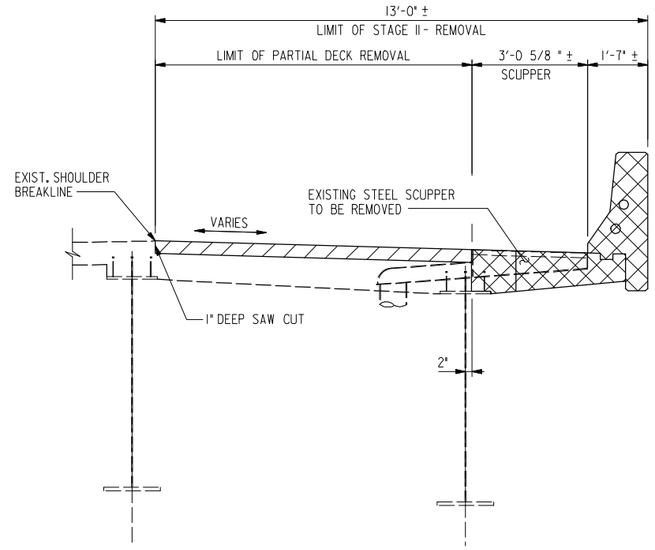

STAGE II – REMOVAL AT SCUPPERS

SCALE: 1/2" = 1'-0"
(LOOKING NORTH)

DRAINAGE NOTES:

1. CONTRACTOR SHALL REMOVE EXISTING SCUPPERS AND PLUG EXISTING OUTLET TUBE TO REMAIN INSIDE DECK SLAB.
2. NEW SCUPPER GRATING IS NOT SHOWN. CONTRACTOR SHALL PROVIDE CURVED VANE TYPE GRATE FOR ALL NEW SCUPPERS.
3. FOR DETAILS OF NEW SCUPPER AND DRAIN PIPE DETAILS, SEE DWG. NOS. S-14 THRU S-16.
4. PROVIDE ADDITIONAL 2-#6 TRANSVERSE TOP BARS AT EACH SIDE OF THE SCUPPER IN DECK REPLACEMENT.
5. THE NEW SCUPPERS, DOWNSPOUTS AND DRAIN PIPES WILL BE PAID FOR AT THE CONTRACT LUMP SUM PRICE FOR BRIDGE DRAINAGE SYSTEM BID ITEM. PAYMENT SHALL INCLUDE REMOVAL OF EXISTING DRAIN PIPES, PLUGING EXISTING DOWNSPOUTS AND ABANDONED SCUPPER TUBES IN DECK SLAB, AND CONNECTION TO EXISTING DRAINAGE SYSTEM AT PIERS. PAYMENT WILL BE FULL COMPENSATION FOR FURNISHING AND INSTALLING NEW SCUPPERS AND DRAIN PIPES, PIPE FITTINGS, CONNECTIONS TO EXISTING DRAINPIPES, REDUCERS, HANGER SUPPORT BRACKETS, AND ALL TOOLS, EQUIPMENT, MATERIAL AND INCIDENTALS NECESSARY TO COMPLETE THE WORK.
6. FOR NEW SCUPPER LOCATIONS, SEE DWG. NOS. S-1 TO S-4 AND ROADWAY PLANS.
7. ALL REINFORCING STEEL INCLUDING WIRE MESH STEEL SHALL BE EPOXY COATED.

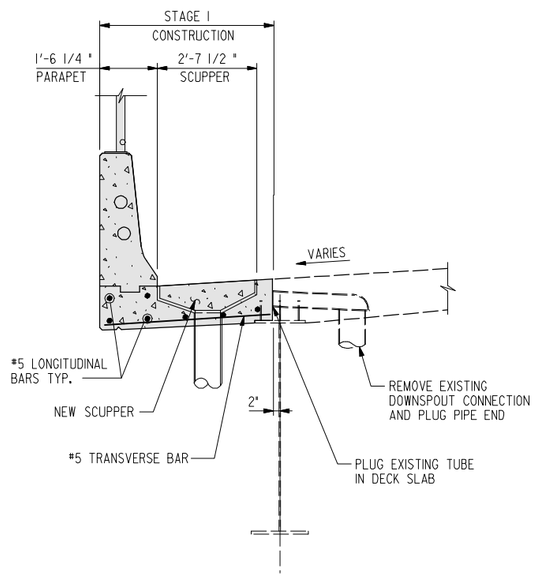

STAGE I – CONSTRUCTION AT SCUPPERS

SCALE: 1/2" = 1'-0"
(LOOKING NORTH)

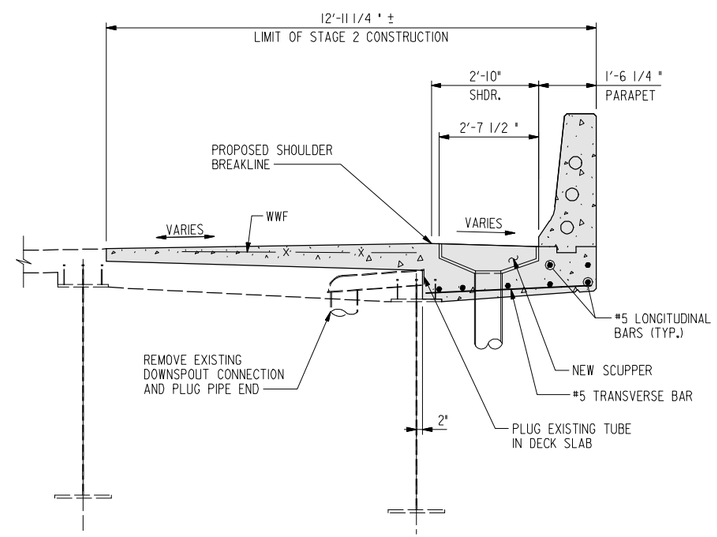

STAGE II – CONSTRUCTION AT SCUPPERS

SCALE: 1/2" = 1'-0"
(LOOKING NORTH)

LEGEND:

- INDICATES PORTION OF EXISTING DECK TO BE PARTIALLY REMOVED
- INDICATES PORTION OF EXISTING STRUCTURE TO BE REMOVED.
- INDICATES NEW CONSTRUCTION

RK&K
81 MOSHER STREET | BALTIMORE, MD 21217
PH: (410) 728-2900 FAX: (410) 728-3160
Engineers Construction Managers Planners Scientists
www.rkk.com

ALA
ATHAVALE, LYSTAD & ASSOCIATES INC.
Consulting Engineers Rockville, Maryland

MARYLAND TRANSPORTATION AUTHORITY
Engineering Division

ADDENDUMS & REVISIONS

NO.	DESCRIPTION	BY	DATE

I-95 FROM MORAVIA ROAD TO THE FORT McHENRY TUNNEL - PHASE 1 - SOUTHBOUND

I-95 (BALTIMORE CITY)
BRIDGE NO. BCW 596-2 - I-95 S.B. OVER CANTON RAILROAD TO HERRING RUN
DECK DRAINAGE DETAILS - I

DESIGNED BY K.A.	DRAWN BY J.E.	CHECKED BY D.W.	
CONST. REVIEW BY	DATE DECEMBER 2009	SCALE AS SHOWN	

CONTRACT NO. FT 928-000-006
DRAWING NO. S-13
SHEET NO. 95 OF 188

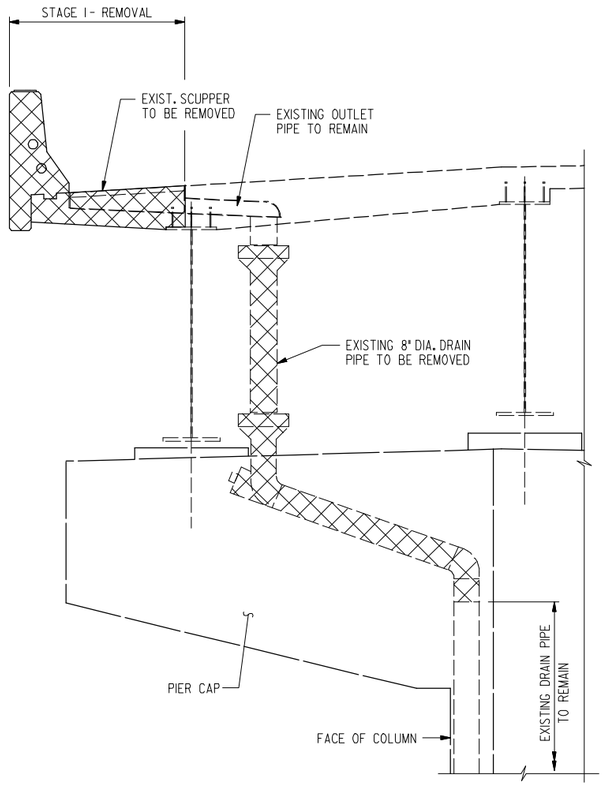

STAGE I – DRAINAGE REMOVAL DETAIL

SCALE: 1/2" = 1'-0"
(LOOKING NORTH)

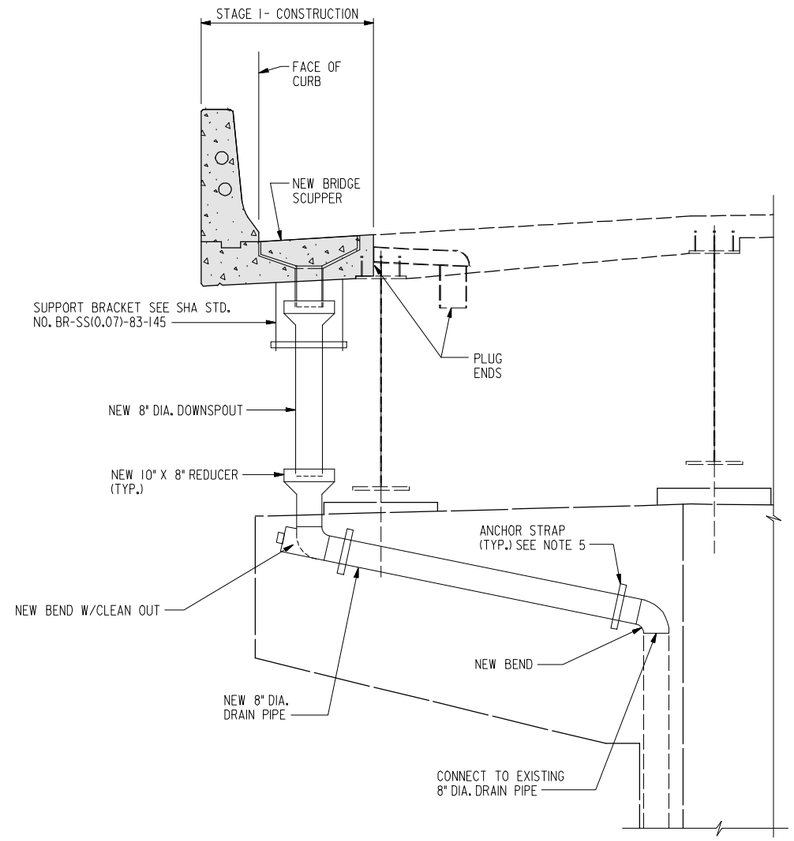

STAGE I – DRAINAGE CONSTRUCTION DETAIL

SCALE: 1/2" = 1'-0"
(LOOKING NORTH)

NOTES:

1. ALL NEW DRAIN PIPES INCLUDING BENDS, REDUCERS AND DOWNSPOUTS MAY BE PVC OR FIBERGLASS.
2. FOR DETAILS OF NEW BRIDGE SCUPPER, SEE DWG. NO. S-16.
3. FOR SIZE OF DRAIN PIPES, SEE SHEET S-1 TO S-4.
4. FOR ADDITIONAL NOTES, SEE DWG NO. S-13.
5. THE ANCHOR STRAP SHALL BE 1/4" X 3" STAINLESS STEEL PLATE. SPACE AT 6' C/C MAX. SECURE TO PIER WITH 1/2" DIA. STAINLESS STEEL BOLTS AND DRILLED EPOXY COATED INSERTS.

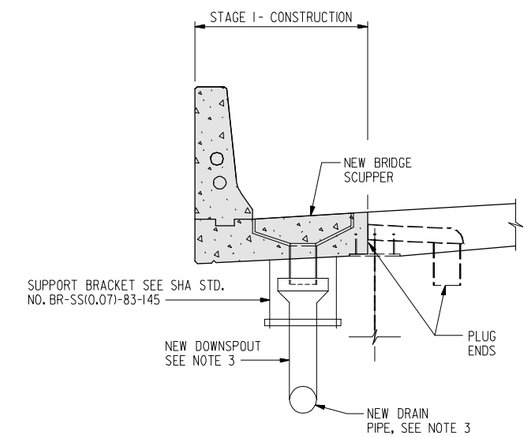

STAGE I – DRAINAGE CONSTRUCTION DETAIL WITH LATERAL DRAIN PIPE

SCALE: 1/2" = 1'-0"

LEGEND:

INDICATES PORTION OF EXISTING STRUCTURE TO BE REMOVED.

INDICATES NEW CONSTRUCTION

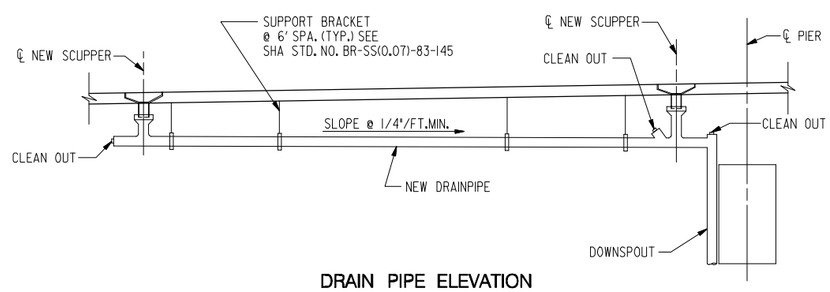

DRAIN PIPE ELEVATION

N.T.S.

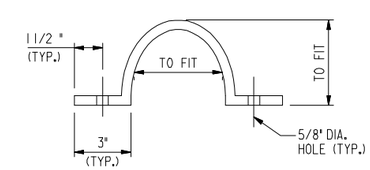

ANCHOR STRAP DETAIL

SCALE: 3" = 1'-0"

RK&K
81 MOSHER STREET | BALTIMORE, MD 21217
PH: (410) 728-2900 FAX: (410) 728-3180
Engineers Construction Managers Planners Scientists
www.rkk.com

ALA
ATHAVALE, LYSTAD & ASSOCIATES INC.
Consulting Engineers Rockville, Maryland

MARYLAND TRANSPORTATION AUTHORITY
Engineering Division

ADDENDUMS & REVISIONS

NO.	DESCRIPTION	BY	DATE

I-95 FROM MORAVIA ROAD TO THE FORT McHENRY TUNNEL - PHASE 1 - SOUTHBOUND

I-95 (BALTIMORE CITY)
BRIDGE NO. BCW 596-2 - I-95 S.B. OVER CANTON RAILROAD TO HERRING RUN
DECK DRAINAGE DETAILS - 2

CONTRACT NO. FT 928-000-006
DRAWING NO. S-14

DESIGNED BY K.A. | DRAWN BY J.E. | CHECKED BY D.W.
CONST. REVIEW BY | DATE DECEMBER 2009 | SCALE AS SHOWN

SHEET NO. 96 OF 188

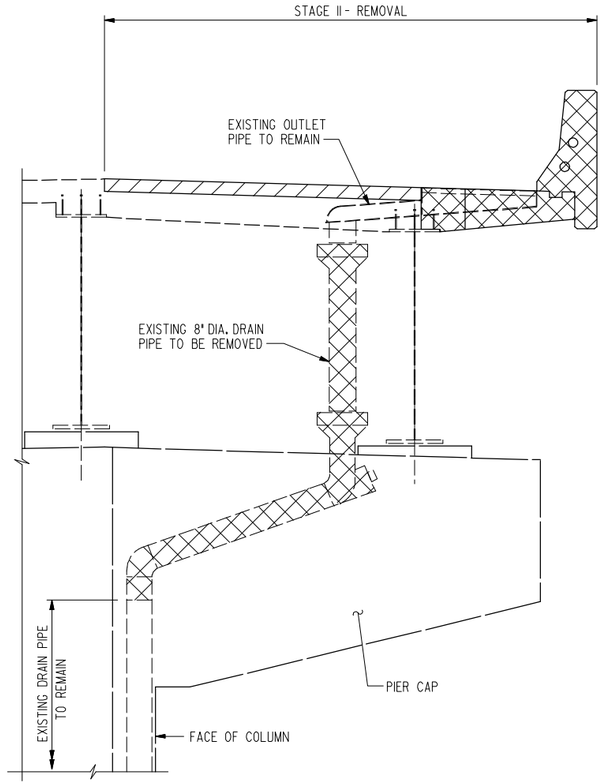

STAGE II – DRAINAGE REMOVAL DETAIL

SCALE: 1/2" = 1'-0"
(LOOKING NORTH)

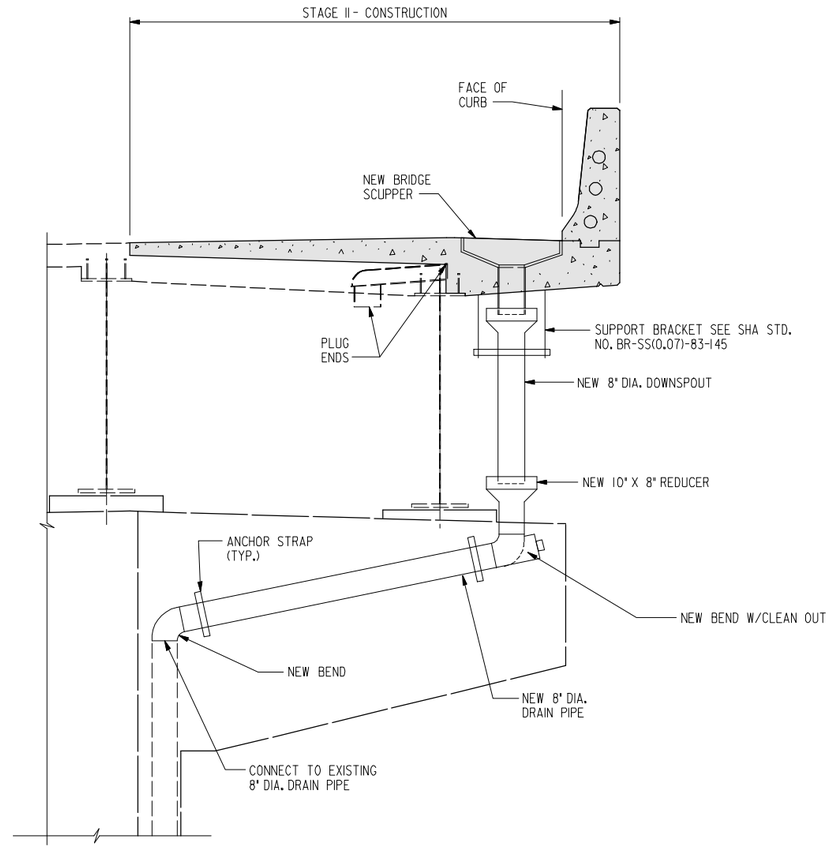

STAGE II – DRAINAGE CONSTRUCTION DETAIL

SCALE: 1/2" = 1'-0"
(LOOKING NORTH)

NOTES:

1. ALL NEW DRAIN PIPES INCLUDING BENDS, REDUCERS AND DOWNSPOUTS MAY BE PVC OR FIBERGLASS.
2. FOR DETAILS OF NEW BRIDGE SCUPPER, SEE DWG. NO. S-16.
3. FOR DRAIN PIPE ELEVATION, SEE DWG NO. S-14.
4. FOR ADDITIONAL NOTE, SEE DWG NO. S-13.
5. FOR ANCHOR STRAP DETAIL, SEE DWG NO. S-14.

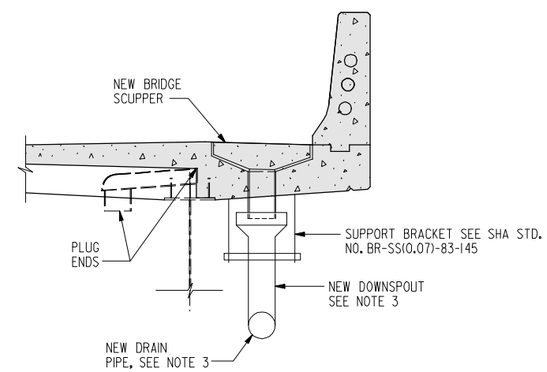

STAGE II – DRAINAGE CONSTRUCTION DETAIL WITH LATERAL DRAIN PIPE

SCALE: 1/2 = 1'-0"

LEGEND:

- INDICATES PORTION OF EXISTING DECK TO BE PARTIALY REMOVED.
- INDICATES PORTION OF EXISTING STRUCTURE TO BE REMOVED.
- INDICATES NEW CONSTRUCTION

RK&K
81 MOSHER STREET | BALTIMORE, MD 21217
PH: (410) 728-2900 FAX: (410) 728-3180
Engineers Construction Managers Planners Scientists
www.rkk.com

ALA
ATHAVALE, LYSTAD & ASSOCIATES INC.
Consulting Engineers Rockville, Maryland

MARYLAND TRANSPORTATION AUTHORITY
Engineering Division

ADDENDUMS & REVISIONS

NO.	DESCRIPTION	BY	DATE

I-95 FROM MORAVIA ROAD TO THE FORT McHENRY TUNNEL - PHASE 1 - SOUTHBOUND

I-95 (BALTIMORE CITY)
BRIDGE NO. BCW 596-2 - I-95 S.B. OVER CANTON RAILROAD TO HERRING RUN
DECK DRAINAGE DETAILS - 3

CONTRACT NO. FT 928-000-006
DRAWING NO. S-15

DESIGNED BY K.A. | DRAWN BY J.E. | CHECKED BY D.W.
CONST. REVIEW BY | DATE DECEMBER 2009 | SCALE AS SHOWN

FILE: r:\49562\dgn\SB\proj\596_S-15_Deck Drainage Details - 3.dgn
DATE: Friday, December 04, 2009 AT 02:57 PM
r:\49562\dgn\SB\proj\596_S-15_Deck Drainage Details - 3.dgn
Friday, December 04, 2009 AT 02:57 PM

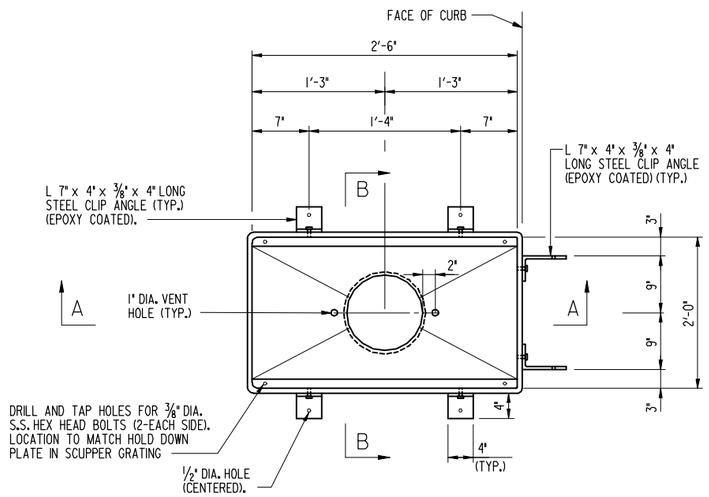

PLAN

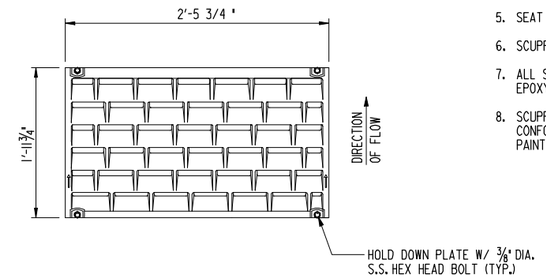

PLAN – SCUPPER GRATING

NOTES:

1. SCUPPER AND GRATING SHALL BE GRAY CAST IRON, CONFORMING TO A48 CLASS 30 B, MIN.
2. STAINLESS STEEL BOLTS SHALL CONFORM TO A193, IDENTIFICATION SYMBOL B8, TYPE 304.
3. WOOD FORMS MAY BE USED IN THE AREA OF THE SCUPPER AS APPROVED BY THE ENGINEER.
4. THERE MUST BE A MINIMUM OF 5" OF CONCRETE UNDER ENTIRE SCUPPER AREA, WITH A MAT OF REBARS EQUIVALENT IN SIZE AND SPACING TO NORMAL BOTTOM MAT PATTERN OF DECK. THIS MAY REQUIRE THE LOWERING OF DECK IN THIS AREA.
5. SEAT FOR GRATING SHALL BE FABRICATED TO A TRUE PLANE.
6. SCUPPER GRATE SHALL BE METAL CURVED VANE TYPE.
7. ALL STEEL ANGLES FOR SETTING THE SCUPPER SHALL BE A709, GRADE 36, AND SHALL BE EPOXY COATED.
8. SCUPPERS SHALL BE PAINTED WITH ONE SHOP COAT INSIDE AND OUTSIDE. SHOP PAINT SHALL CONFORM TO SECTION 912.02.01 OF THE SPECIFICATIONS. INSIDE OF SCUPPERS TO BE PAINTED WITH ONE COAT OF COAL TAR EPOXY SSPC-PAINT 16.

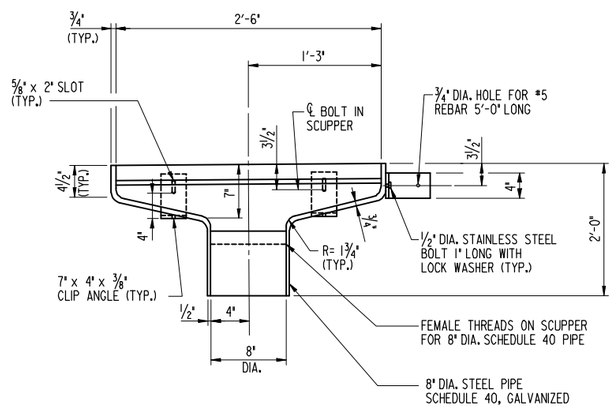

SECTION A–A

(GRATING ON TOP OF SCUPPER NOT SHOWN)

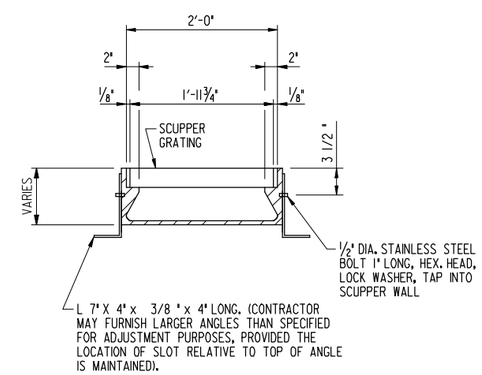

SECTION B–B

BRIDGE SCUPPER DETAIL

SCALE: 1/2" = 1'-0"

RK&K
81 MOSHER STREET | BALTIMORE, MD 21217
PH: (410) 728-2900 FAX: (410) 728-3180
Engineers Construction Managers Planners Scientists
www.rkk.com

ALA
ATHAVALE, LYSTAD & ASSOCIATES INC.
Consulting Engineers Rockville, Maryland

MARYLAND TRANSPORTATION AUTHORITY
Engineering Division

ADDENDUMS & REVISIONS

NO.	DESCRIPTION	BY	DATE

I-95 FROM MORAVIA ROAD TO THE FORT McHENRY TUNNEL - PHASE 1 - SOUTHBOUND
I-95 (BALTIMORE CITY)
BRIDGE NO. BCW 596-2 - I-95 S.B. OVER CANTON RAILROAD TO HERRING RUN
DECK DRAINAGE DETAILS - 4

DESIGNED BY K.A.	DRAWN BY J.E.	CHECKED BY D.W.
CONST. REVIEW BY	DATE DECEMBER 2009	SCALE AS SHOWN

CONTRACT NO. FT 928-000-006
DRAWING NO. S-16
SHEET NO. 98 OF 188

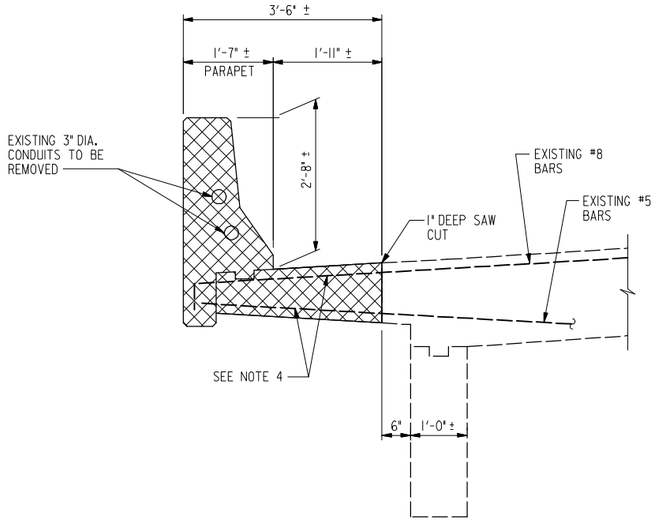

STAGE 1 – REMOVAL

SCALE: 3/4" = 1'-0"
AT APPROACH SPANS
(LOOKING NORTH)

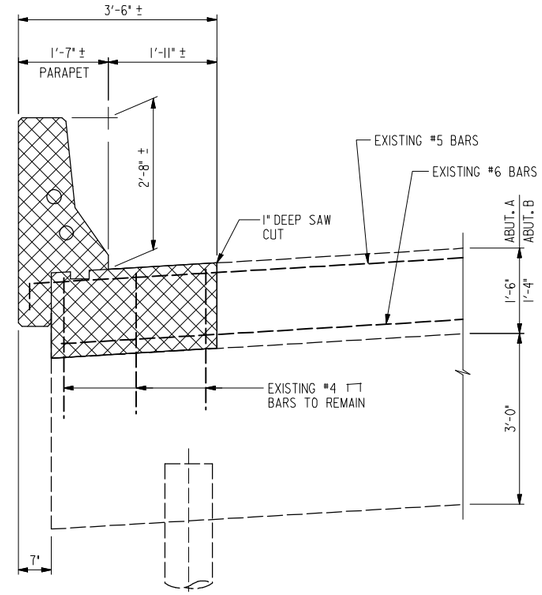

STAGE 1 – REMOVAL

SCALE: 3/4" = 1'-0"
AT APPROACH SPAN END
(LOOKING NORTH)

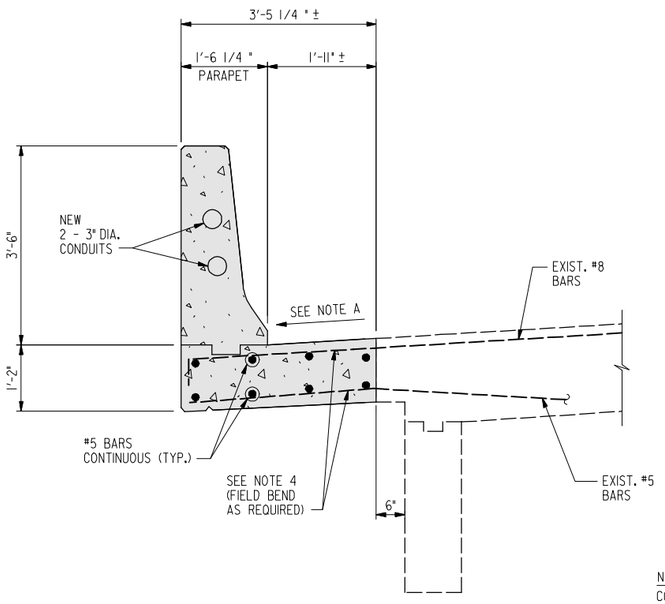

STAGE 1 – CONSTRUCTION

SCALE: 3/4" = 1'-0"
AT APPROACH SPANS
(LOOKING NORTH)

NOTE A:
CONTRACTOR SHALL MATCH EXISTING CROSS SLOPE.

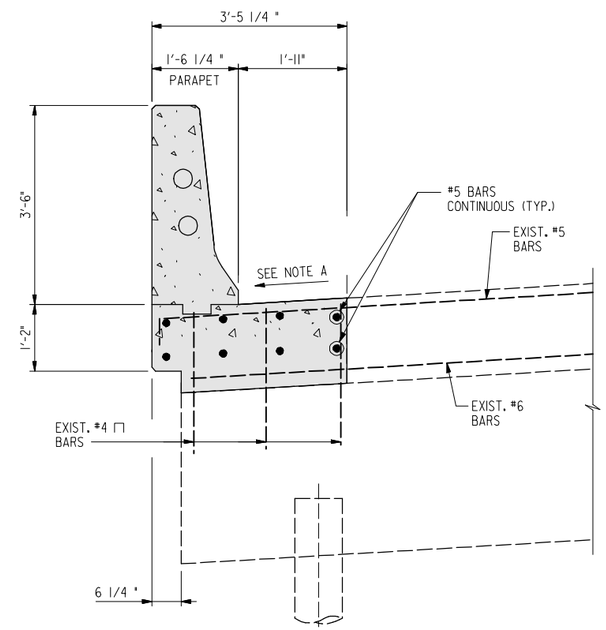

STAGE 1 – CONSTRUCTION

SCALE: 3/4" = 1'-0"
AT APPROACH SPAN END
(LOOKING NORTH)

NOTES:

1. FOR REINFORCING DETAILS OF NEW PARAPET, SEE SHA STD. NO.BR-SS(6.02)03-27B.
2. FOR CONCRETE SPECIFICATIONS, SEE GENERAL NOTES.
3. ALL REINFORCING STEEL SHALL BE EPOXY COATED.
4. CONTRACTOR SHALL MAINTAIN EXISTING REINFORCING BARS TO BE INCORPORATED INTO NEW CONSTRUCTION. CARE SHALL BE TAKEN DURING THE REMOVAL WORK NOT TO DAMAGE THE EXISTING REINFORCING BARS. ANY DAMAGE TO THESE BARS SHALL BE CORRECTED AS SPECIFIED IN SECTION 421.03.07 OF THE SPECIFICATIONS.
5. FOR CONDUIT DETAILS, SEE SHA STD. NO. BR-SS(6.37)-05-247B.
6. EXPOSED EXISTING REINFORCING BARS TO REMAIN SHALL BE THOROUGHLY CLEANED AND FIELD EPOXY COATED.

LEGEND:

INDICATES PORTION OF EXISTING STRUCTURE TO BE REMOVED.

INDICATES NEW CONSTRUCTION

RK&K
81 MOSHER STREET | BALTIMORE, MD 21217
PH: (410) 728-2900 FAX: (410) 728-3180
Engineers Construction Managers Planners Scientists
www.rkk.com

ALA
ATHAVALE, LYSTAD & ASSOCIATES INC.
Consulting Engineers Rockville, Maryland

MARYLAND TRANSPORTATION AUTHORITY
Engineering Division

ADDENDUMS & REVISIONS			
NO.	DESCRIPTION	BY	DATE

I-95 FROM MORAVIA ROAD TO THE FORT McHENRY TUNNEL - PHASE 1 - SOUTHBOUND

I-95 (BALTIMORE CITY)
BRIDGE NO. BCW 596-2 - I-95 S.B. OVER CANTON RAILROAD TO HERRING RUN
APPROACH SPAN DETAILS - 1

DESIGNED BY K.A.	DRAWN BY J.E.	CHECKED BY D.W.
CONST. REVIEW BY	DATE DECEMBER 2009	SCALE AS SHOWN

CONTRACT NO. FT 928-000-006
DRAWING NO. S-17
SHEET NO. 99 OF 188

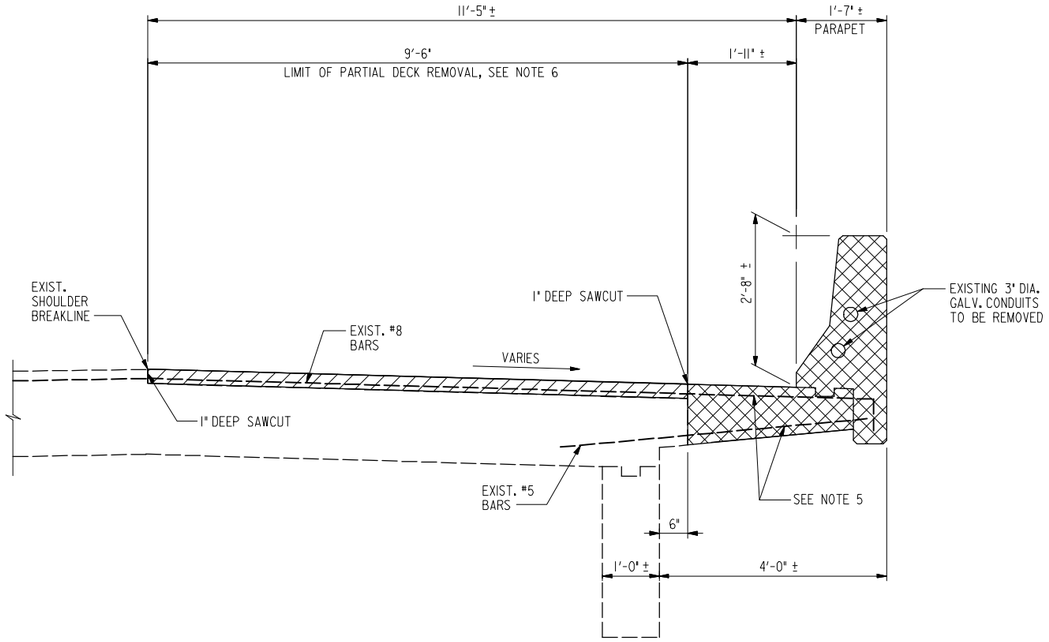

STAGE II – REMOVAL

SCALE: 3/4" = 1'-0"

AT APPROACH SPANS
(LOOKING NORTH)

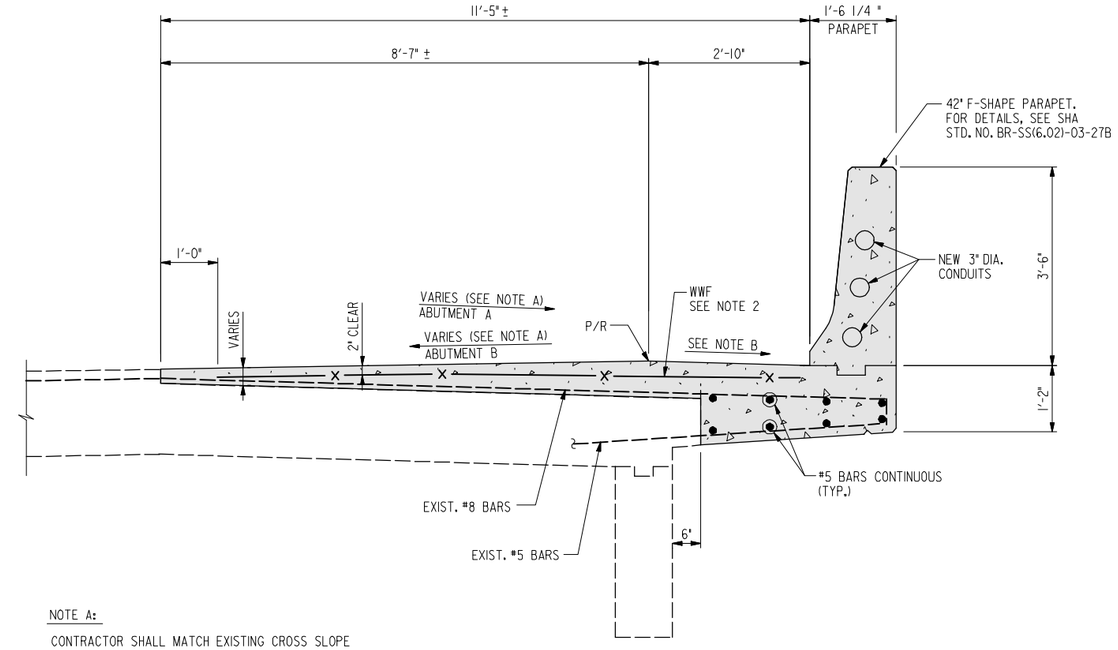

NOTE A:

CONTRACTOR SHALL MATCH EXISTING CROSS SLOPE

NOTE B:

FOR CROSS SLOPE INFORMATION, SEE ROADWAY PLANS DWG. NOS. SE-01 THRU SE-03.

STAGE II – CONSTRUCTION

SCALE: 3/4" = 1'-0"

AT APPROACH SPANS
(LOOKING NORTH)

NOTES:

1. ALL REINFORCING STEEL BARS INCLUDING WELDED WIRE FABRIC (WWF) SHALL BE EPOXY COATED.
2. CONTRACTOR MAY USE WWF 6 x 6 - W7.0 x W7.0 OR #4 BARS @ 6' C/C IN BOTH DIRECTIONS FOR THE WWF REINFORCING SPECIFIED ON THIS SHEET.
3. FOR CONCRETE SPECIFICATIONS, SEE GENERAL NOTES.
4. FOR CONDUIT DETAILS, SEE SHA STD. NO. BR-SS(6.37)-05-247B (MODIFIED).
5. CONTRACTOR SHALL MAINTAIN THE EXISTING REINFORCING BARS TO BE INCORPORATED INTO NEW CONSTRUCTION. CARE SHALL BE TAKEN DURING THE REMOVAL WORK NOT TO DAMAGE THE EXISTING REINFORCING BARS. ANY DAMAGE OR LOSS IN THESE BARS SHALL BE CORRECTED AS SPECIFIED IN SECTION 421.03.07 OF THE SPECIFICATIONS. EXPOSED EXISTING REINFORCING BARS TO REMAIN SHALL BE THOROUGHLY CLEANED AND FIELD EPOXY COATED.
6. CONTRACTOR SHALL REMOVE EXISTING DECK CONCRETE WITHIN LIMITS SHOWN TO A DEPTH OF 1" BELOW THE TOP REINFORCING STEEL MAT. SEE SPECIAL PROVISIONS FOR DECK SURFACE REMOVAL METHODS.

LEGEND:

- INDICATES PORTION OF EXISTING DECK TO BE PARTIALLY REMOVED.
- INDICATES PORTION OF EXISTING STRUCTURE TO BE REMOVED.
- INDICATES NEW CONSTRUCTION

RK&K
81 MOSHER STREET | BALTIMORE, MD 21217
PH: (410) 728-2900 FAX: (410) 728-3180
Engineers Construction Managers Planners Scientists
www.rkk.com

ALA
ATHAVALE, LYSTAD & ASSOCIATES INC.
Consulting Engineers Rockville, Maryland

MARYLAND TRANSPORTATION AUTHORITY
Engineering Division

ADDENDUMS & REVISIONS

NO.	DESCRIPTION	BY	DATE

I-95 FROM MORAVIA ROAD TO THE FORT McHENRY TUNNEL - PHASE 1 - SOUTHBOUND

I-95 (BALTIMORE CITY)
BRIDGE NO. BCW 596-2 - I-95 S.B. OVER CANTON RAILROAD TO HERRING RUN
APPROACH SPAN DETAILS - 2

DESIGNED BY K.A.	DRAWN BY J.E.	CHECKED BY D.W.	
CONST. REVIEW BY	DATE DECEMBER 2009	SCALE AS SHOWN	

CONTRACT NO. FT 928-000-006

DRAWING NO. **S-18**

SHEET NO. 100 OF 188

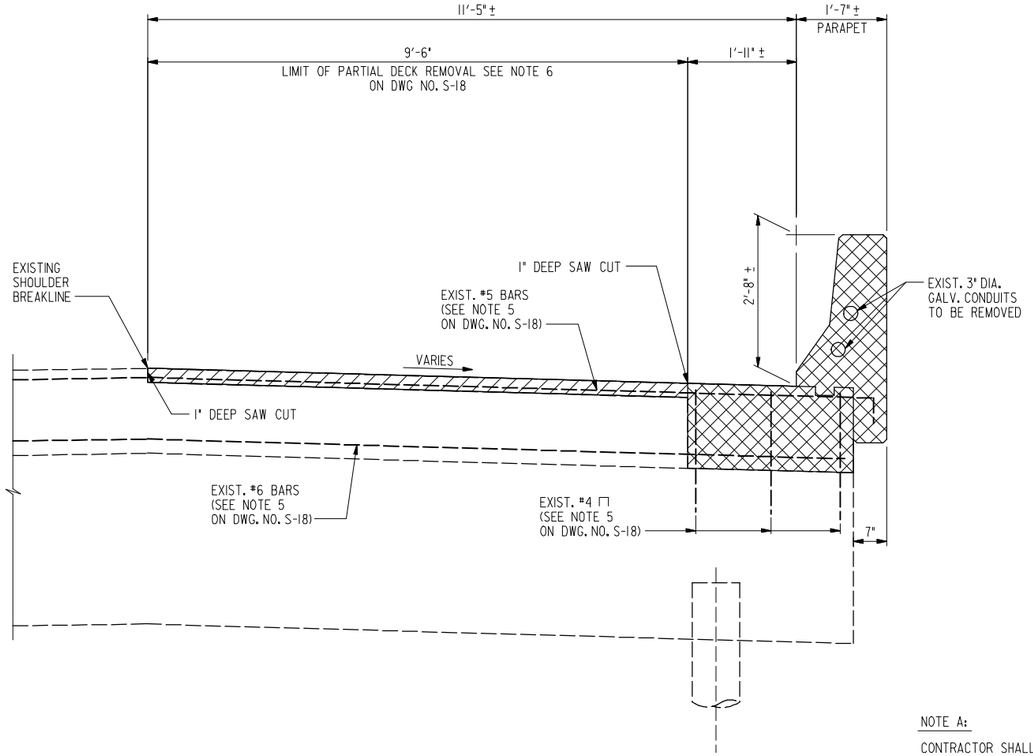

STAGE II – REMOVAL

SCALE: 3/4" = 1'-0"

AT APPROACH SPAN END
(LOOKING NORTH)

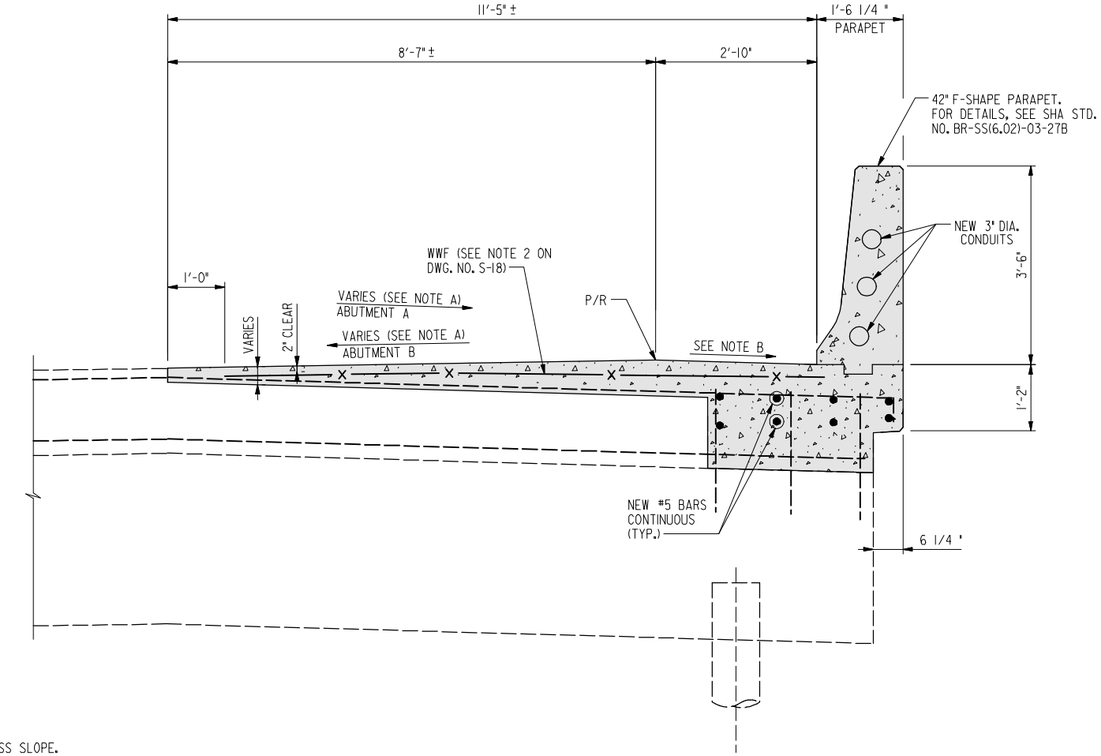

STAGE II – CONSTRUCTION

SCALE: 3/4" = 1'-0"

AT APPROACH SPAN END
(LOOKING NORTH)

NOTE A:

CONTRACTOR SHALL MATCH EXISTING CROSS SLOPE.

NOTE B:

FOR CROSS SLOPE INFORMATION, SEE ROADWAY PLANS
DWG. NOS. SE-01 THRU SE-03.

NOTE:

FOR NOTES, SEE DRAWING NO. S-18.

LEGEND:

- INDICATES PORTION OF EXISTING DECK TO BE PARTIALLY REMOVED.
- INDICATES PORTION OF EXISTING STRUCTURE TO BE REMOVED.
- INDICATES NEW CONSTRUCTION

RK&K
81 MOSHER STREET | BALTIMORE, MD 21217
PH: (410) 728-2900 FAX: (410) 728-3180
Engineers Construction Managers Planners Scientists
www.rkk.com

ALA
ATHAVALE, LYSTAD & ASSOCIATES INC.
Consulting Engineers Rockville, Maryland

MARYLAND TRANSPORTATION AUTHORITY
Engineering Division

ADDENDUMS & REVISIONS			
NO.	DESCRIPTION	BY	DATE

I-95 FROM MORAVIA ROAD TO THE
FORT McHENRY TUNNEL - PHASE 1 - SOUTHBOUND
I-95 (BALTIMORE CITY)
BRIDGE NO. BCW 596-2 - I-95 S.B. OVER CANTON RAILROAD TO HERRING RUN
APPROACH SPAN DETAILS - 3

DESIGNED BY K.A.	DRAWN BY J.E.	CHECKED BY D.W.
CONST. REVIEW BY	DATE DECEMBER 2009	SCALE AS SHOWN

CONTRACT NO. FT 928-000-006
DRAWING NO. S-19
SHEET NO. 101 OF 188

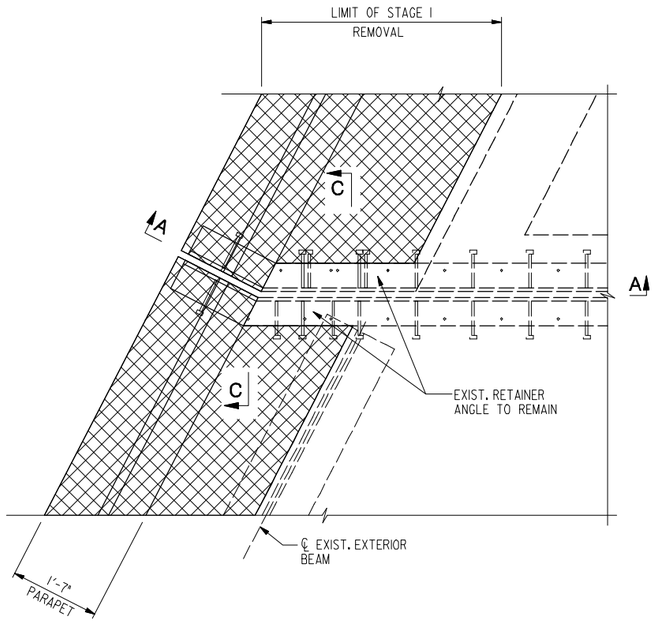

STAGE I – REMOVAL AT ROADWAY JOINTS

SCALE: 3/4" = 1'-0"

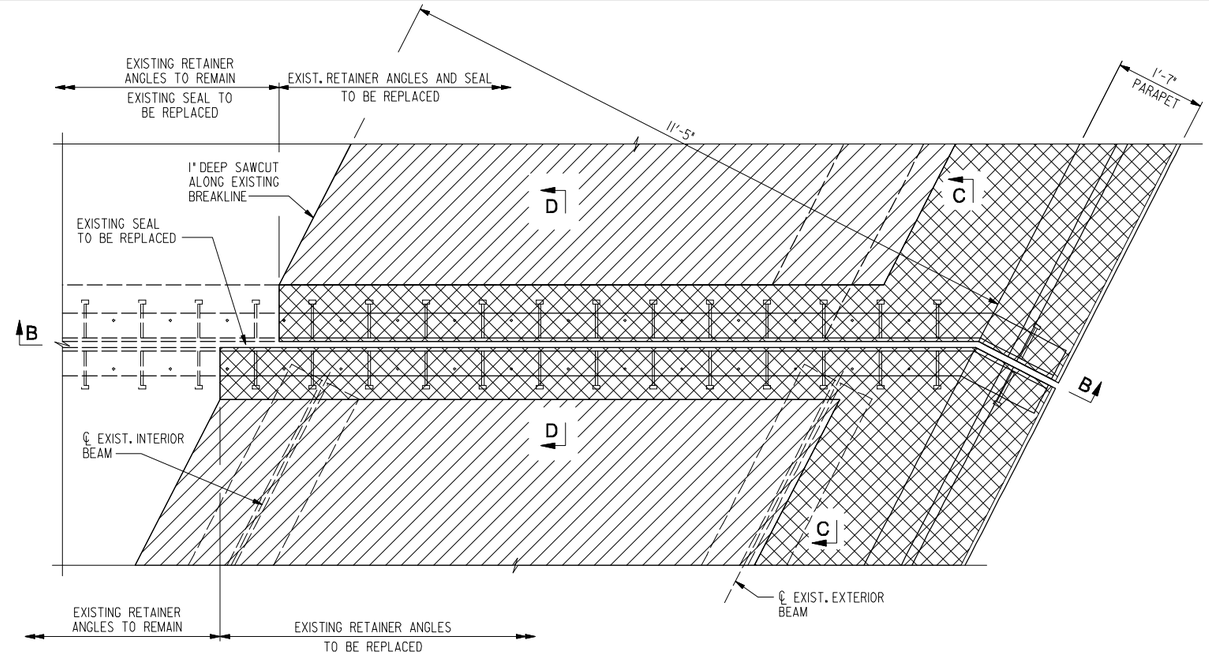

STAGE II – REMOVAL AT ROADWAY JOINTS

SCALE: 3/4" = 1'-0"

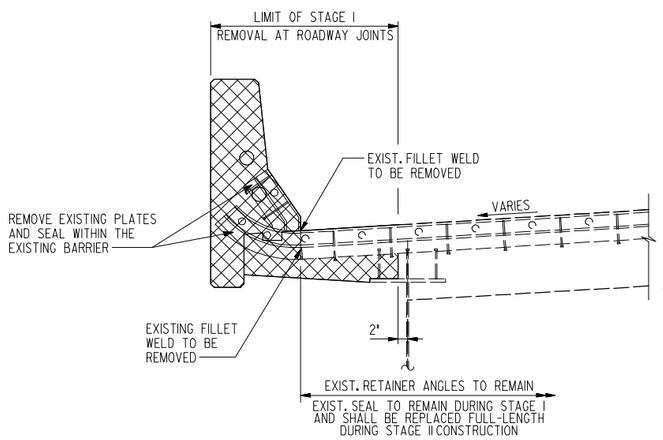

SECTION A–A

SCALE: 3/4" = 1'-0"

NOTES:

1. FOR SECTIONS C AND D, SEE DWG. NO. S-22.
2. REMOVAL WORK AT ABUTMENT B JOINT IS SHOWN. REMOVAL WORK AT ABUTMENT A JOINT IS SIMILAR. SEE SECTIONS C AND D FOR LIMITS. REMOVAL WORK AT PIERS IS SIMILAR. FOR SECTION AT PIERS, SEE DWG. NOS. S-22 TO S-25.
3. ALL DECK REMOVAL OVER THE EXISTING BEAMS SHALL BE DONE USING HAND TOOLS OR POWER DRIVEN HAND TOOLS ONLY.
4. FOR ADDITIONAL REMOVAL INFORMATION BEYOND THE JOINTS, SEE DWG. NOS. S-7 TO S-11 AND S-17 TO S-19.
5. CONTRACTOR SHALL REPLACE THE EXISTING JOINT SEAL (FULL-LENGTH) FOR THE ENTIRE LENGTH OF THE JOINT. SEAL REPLACEMENT WILL BE MEASURED AND PAID FOR AT THE CONTRACT UNIT PRICE PER LINEAR FOOT FOR THE PERTINENT JOINT TYPE. PAYMENT FOR 'MODIFYING EXISTING BRIDGE ROADWAY JOINT' TYPE 1 AND TYPE 2 SHALL INCLUDE THE ADDITIONAL CONCRETE REMOVAL AT THE EXISTING JOINT IN STAGE II, REPLACEMENT OF RETAINER ANGLES, FURNISHING AND INSTALLING STEEL PLATES AND ANGLES FOR JOINT IN PARAPETS AT BOTH STAGES I AND II, AND ALL TOOLS, EQUIPMENT, LABOR AND INCIDENTALS TO COMPLETE THE WORK.

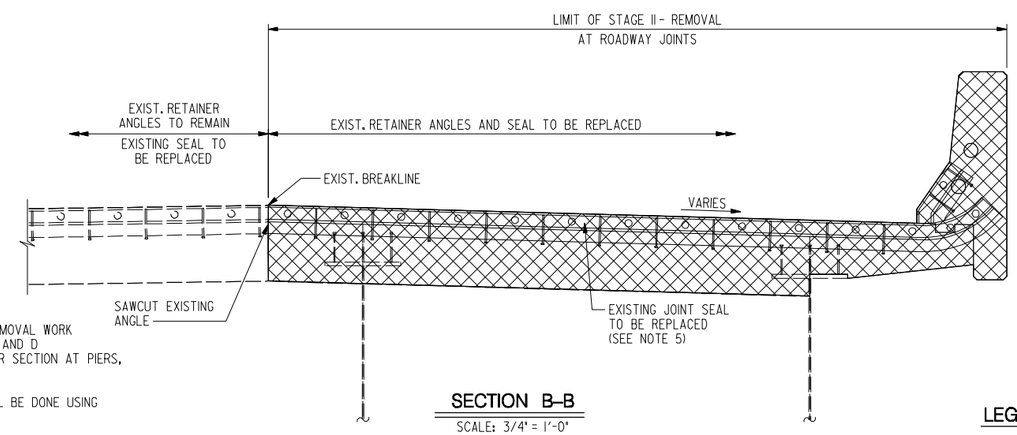

SECTION B–B

SCALE: 3/4" = 1'-0"

LEGEND:

INDICATES PORTION OF EXISTING DECK TO BE PARTIALLY REMOVED.

INDICATES PORTION OF EXISTING STRUCTURE TO BE REMOVED

RK&K
81 MOSHER STREET | BALTIMORE, MD 21217
PH: (410) 728-2900 FAX: (410) 728-3180
Engineers Construction Managers Planners Scientists
www.rkk.com

ALA
ATHAVALE, LYSTAD & ASSOCIATES INC.
Consulting Engineers Rockville, Maryland

MARYLAND TRANSPORTATION AUTHORITY
Engineering Division

ADDENDUMS & REVISIONS			
NO.	DESCRIPTION	BY	DATE

I-95 FROM MORAVIA ROAD TO THE FORT McHENRY TUNNEL - PHASE 1 - SOUTHBOUND
I-95 (BALTIMORE CITY)
BRIDGE NO. BCW 596-2 - I-95 S.B. OVER CANTON RAILROAD TO HERRING RUN
DECK JOINT DETAILS - I

CONTRACT NO. FT 928-000-006
DRAWING NO. S-20

DESIGNED BY K.A. | DRAWN BY J.E. | CHECKED BY D.W.
CONST. REVIEW BY | DATE DECEMBER 2009 | SCALE AS SHOWN

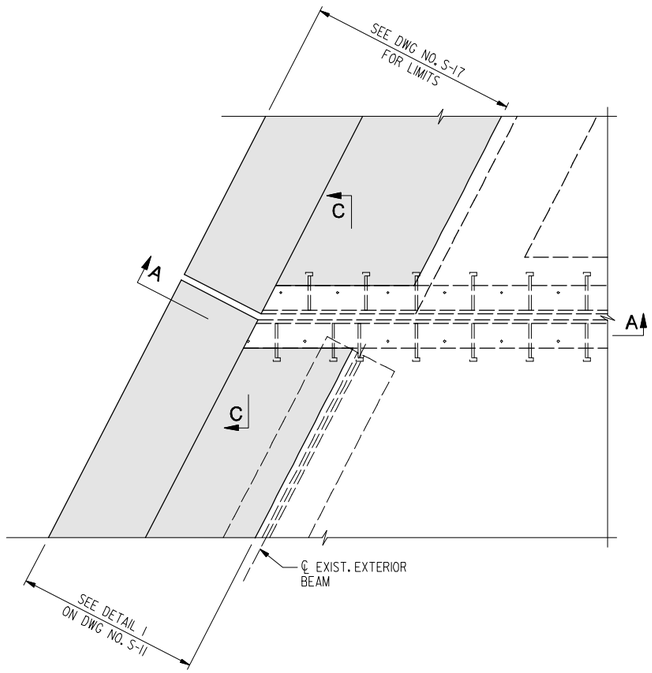

STAGE I – CONSTRUCTION AT ROADWAY JOINTS

SCALE: 3/4" = 1'-0"

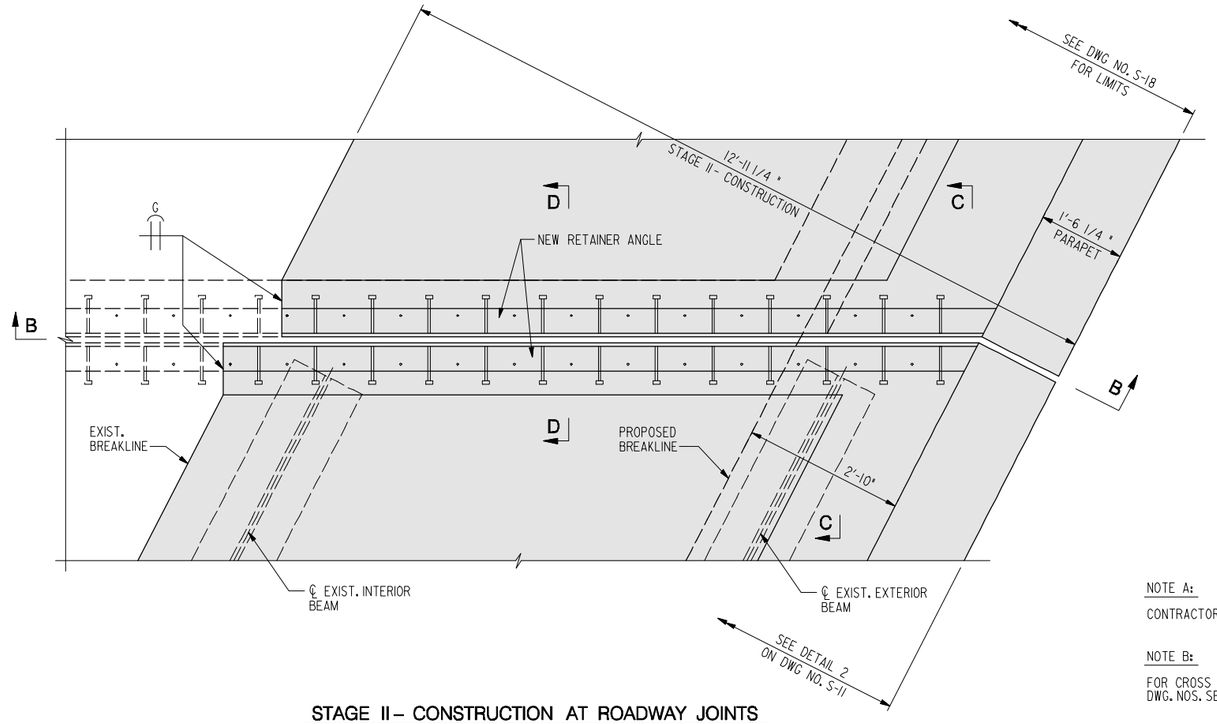

STAGE II – CONSTRUCTION AT ROADWAY JOINTS

SCALE: 3/4" = 1'-0"

NOTE A:

CONTRACTOR SHALL MATCH EXISTING CROSS SLOPE.

NOTE B:

FOR CROSS SLOPE INFORMATION, SEE ROADWAY PLANS DWG. NOS. SE-01 THRU SE-03.

* MEASURED PERPENDICULAR TO FACE OF CURB.

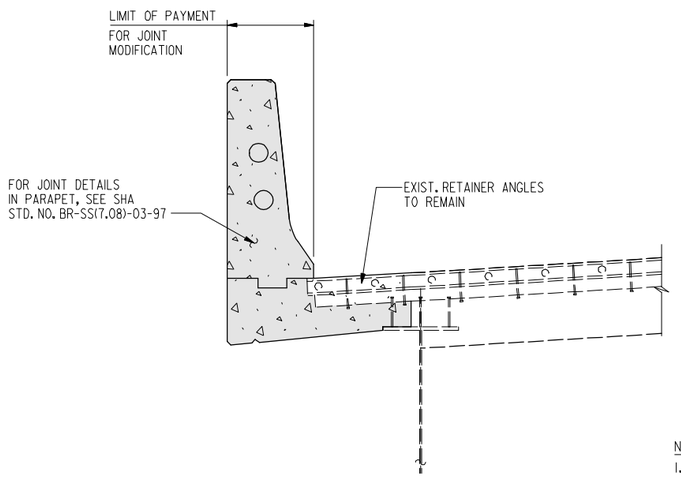

SECTION A–A

SCALE: 3/4" = 1'-0"

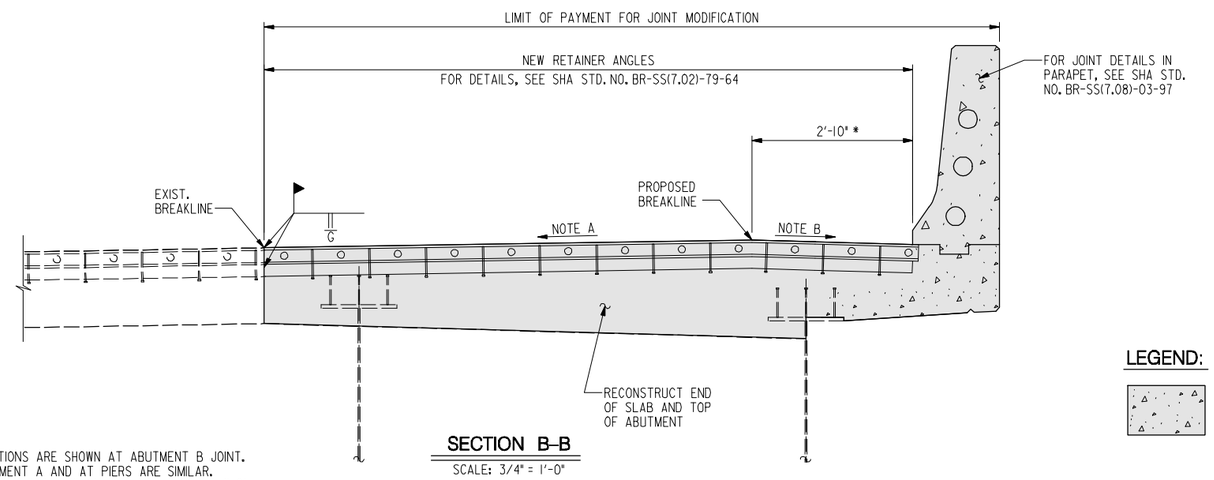

SECTION B–B

SCALE: 3/4" = 1'-0"

NOTES:

1. LIMIT OF WORK AND SECTIONS ARE SHOWN AT ABUTMENT B JOINT. LIMIT OF WORK AT ABUTMENT A AND AT PIERS ARE SIMILAR. FOR DETAILS AT PIERS, SEE SECTIONS ON DWG NOS. S-22 TO S-25.
2. FOR LIMITS OF SEAL REPLACEMENT, SEE DWG. NO. S-20.

LEGEND:

INDICATES NEW CONSTRUCTION

RK&K
81 MOSHER STREET | BALTIMORE, MD 21217
PH: (410) 728-2900 FAX: (410) 728-3180
Engineers Construction Managers Planners Scientists
www.rkk.com

ALA
ATHAVALE, LYSTAD & ASSOCIATES INC.
Consulting Engineers Rockville, Maryland

MARYLAND TRANSPORTATION AUTHORITY
Engineering Division

ADDENDUMS & REVISIONS			
NO.	DESCRIPTION	BY	DATE

I-95 FROM MORAVIA ROAD TO THE FORT McHENRY TUNNEL - PHASE 1 - SOUTHBOUND

I-95 (BALTIMORE CITY)
BRIDGE NO. BCW 596-2 - I-95 S.B. OVER CANTON RAILROAD TO HERRING RUN
DECK JOINT DETAILS - 2

DESIGNED BY K.A.	DRAWN BY J.E.	CHECKED BY D.W.	
CONST. REVIEW BY	DATE DECEMBER 2009	SCALE AS SHOWN	

CONTRACT NO. FT 928-000-006
DRAWING NO. S-21
SHEET NO. 103 OF 188

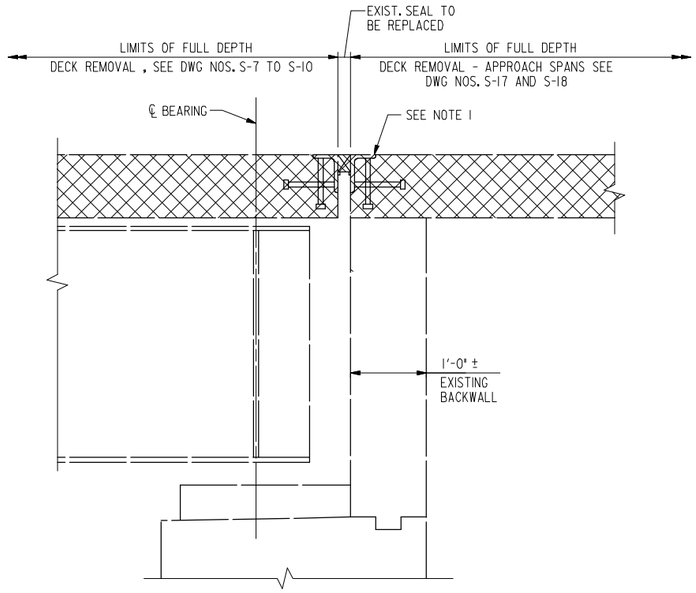

SECTION C – C

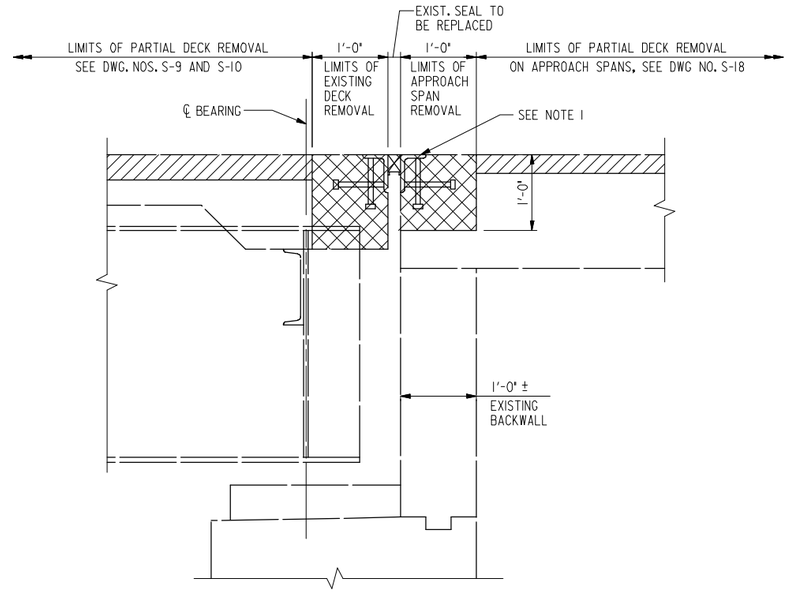

SECTION D – D

NOTES:

1. IN STAGE I REMOVAL, CONTRACTOR SHALL MAINTAIN EXISTING EXPANSION JOINT WITHIN THE LIMITS INDICATED ON DWG. NO. S-20 TO INCORPORATE IN NEW CONSTRUCTION. IN STAGE II REMOVAL, CONTRACTOR SHALL REMOVE THE EXISTING JOINT ASSEMBLY OVER PIERS AND ABUTMENTS TO THE LIMITS INDICATED ON DWG NO. S-20.
2. JOINT TYPE 1- COMPRESSION SEAL JOINT IS SHOWN AT ABUTMENTS A AND B. FOR ADDITIONAL DETAILS, SEE SHA STD. NO. BR-SS(7.01)-77-63(MODIFIED) AND SHA STD. BR-SS(7.02)-79-64.
3. JOINT TYPE 2 - FINGER JOINT ASSEMBLY SHOWN IS AT PIERS 1 AND 5. FOR ADDITIONAL FINGER JOINT DETAILS, SEE SHA STD. NO. BR-SS(7.18)-04-321B.
4. LIMIT OF REMOVAL FOR FINGER JOINT PLATES SHALL EXTEND TO THE NEAREST EXISTING WELDED SPLICE. IF EXISTING WELDED SPLICE IS MORE THAN 3 FEET AWAY FROM PROPOSED REMOVAL LIMIT, THE LIMIT OF FINGER JOINT REMOVAL WILL BE AS SHOWN ON DWG NO. S-20.
5. FOR DETAILS OF STRIP SEAL AT PIERS 7, 10, 12, 15, 17, 21, AND 22, SEE DWG NO. S-24.
6. FOR DETAILS OF COMPRESSION SEAL AT PIER 13, SEE DWG NO. S-25.
7. CONTRACTOR SHALL COORDINATE THE WORK FOR ROADWAY JOINT AT PIER 10 IN STAGES I AND II WITH THE STRUCTURAL PLANS FOR THE OVERHEAD SIGN STRUCTURE (OH-52) ON DWG NOS. S-47 TO S-57.
8. COST FOR REMOVAL AND RE-CONSTRUCTION OF FINGER JOINTS WILL BE PAID FOR AT THE CONTRACT UNIT PRICE PER LINEAR FOOT FOR "MODIFYING EXISTING BRIDGE ROADWAY JOINT-TYPE 2" PAY ITEM.
9. FOR LOCATIONS OF SECTIONS C-C AND D-D, SEE DWG. NO. S-20.
10. COST FOR CONCRETE DECK AT ROADWAY JOINTS SHALL BE INCLUDED IN THE CONTRACT LUMP SUM PRICE FOR "SUPERSTRUCTURE CONCRETE FOR BRIDGE" PAY ITEM.

REMOVAL DETAILS AT ABUTMENTS – JOINT TYPE 1

SCALE: 1" = 1'-0"

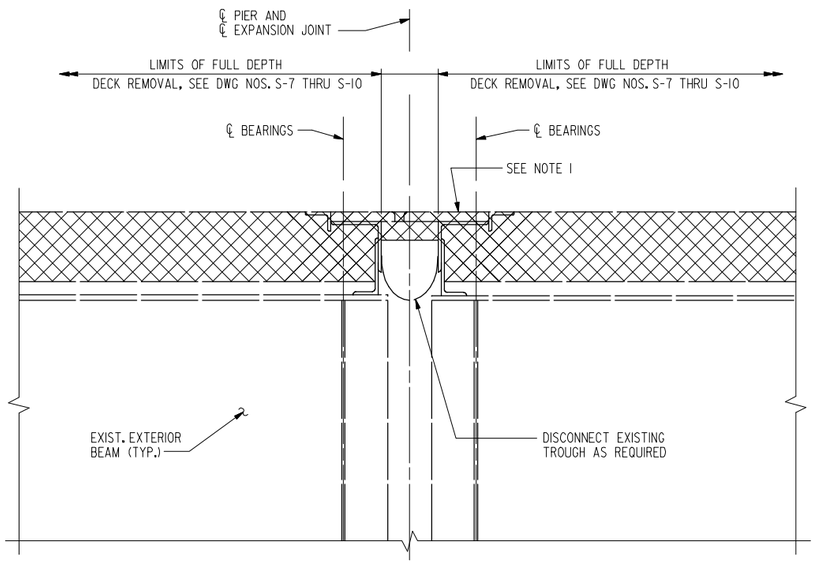

SECTION AT OVERHANG

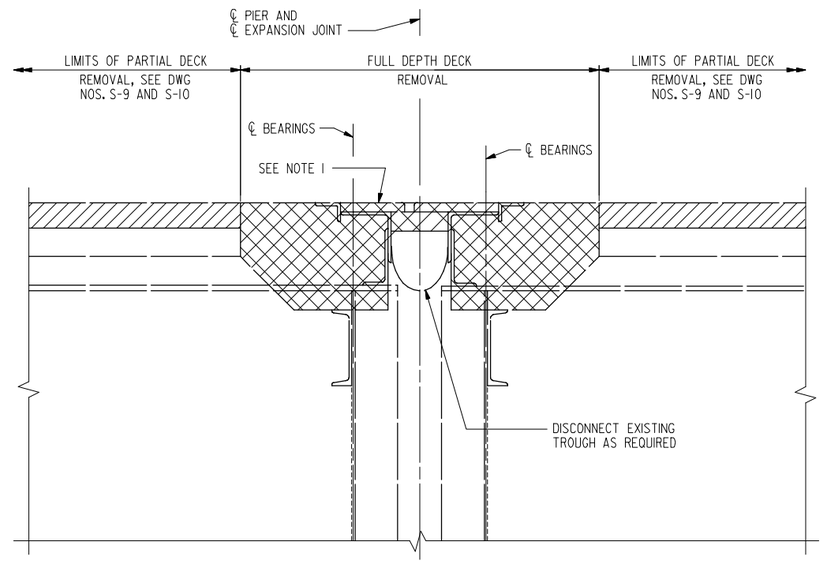

SECTION BETWEEN BEAMS

REMOVAL DETAILS AT PIERS – JOINT TYPE 2

SCALE: 1" = 1'-0"

LEGEND:

INDICATES PORTION OF EXISTING DECK TO BE PARTIALLY REMOVED

INDICATES PORTION OF EXISTING STRUCTURE TO BE REMOVED

RK&K
81 MOSHER STREET | BALTIMORE, MD 21217
PH: (410) 728-2900 FAX: (410) 728-3160
Engineers Construction Managers Planners Scientists
www.rkk.com

ALA
ATHAVALE, LYSTAD & ASSOCIATES INC.
Consulting Engineers Rockville, Maryland

MARYLAND TRANSPORTATION AUTHORITY
Engineering Division

ADDENDUMS & REVISIONS			
NO.	DESCRIPTION	BY	DATE

I-95 FROM MORAVIA ROAD TO THE FORT McHENRY TUNNEL - PHASE 1 - SOUTHBOUND
I-95 (BALTIMORE CITY)
BRIDGE NO. BCW 596-2 - I-95 S.B. OVER CANTON RAILROAD TO HERRING RUN
DECK JOINTS DETAILS - 3

DESIGNED BY K.A.	DRAWN BY J.E.	CHECKED BY D.W.	CONTRACT NO. FT 928-000-006
CONST. REVIEW BY	DATE DECEMBER 2009	SCALE AS SHOWN	DRAWING NO. S-22
			SHEET NO. 104 OF 188

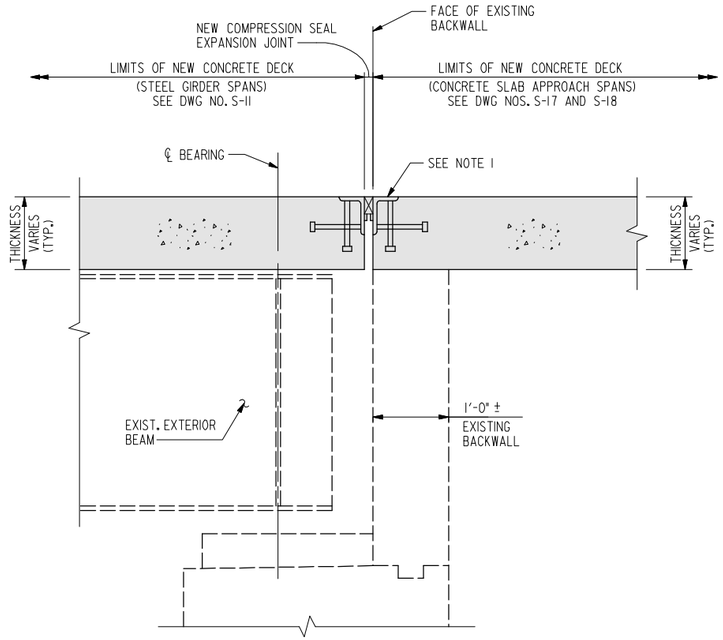

SECTION AT OVERHANG

(REINFORCING STEEL NOT SHOWN)

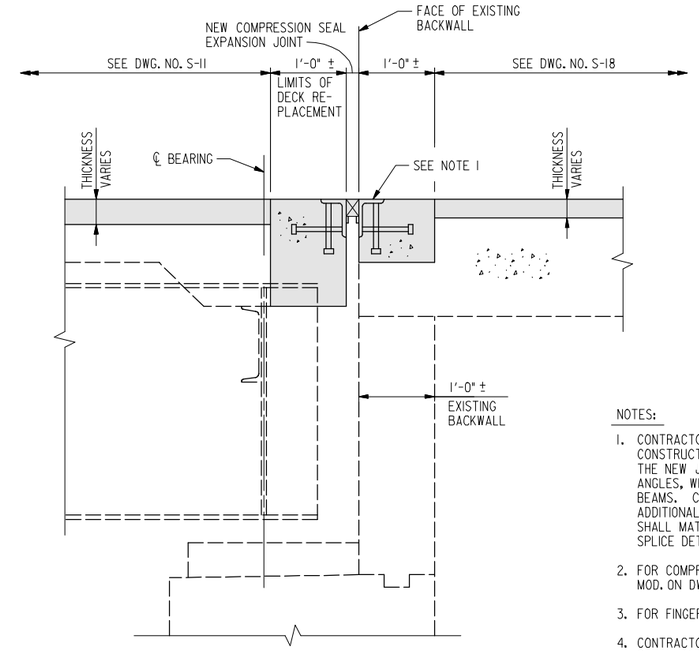

SECTION BETWEEN BEAMS

(REINFORCING STEEL NOT SHOWN)

CONSTRUCTION DETAILS AT ABUTMENTS – JOINT TYPE 1

SCALE: 1" = 1'-0"

LEGEND:

INDICATES NEW CONSTRUCTION

NOTES:

1. CONTRACTOR SHALL INSTALL NEW JOINT ASSEMBLY AT STAGE II CONSTRUCTION ONLY TO MATCH WITH NEW SHOULDER BREAKLINE. THE NEW JOINT ASSEMBLY WILL BE BOLTED TO THE EXISTING ANGLES, WHICH ARE WELDED TO THE TOP FLANGES OF THE EXISTING BEAMS. CONTRACTOR MAY USE WELDING IN LIEU OF BOLTING AT NO ADDITIONAL COST TO THE AUTHORITY. THE NEW JOINT ASSEMBLY SHALL MATCH EXISTING JOINT OPENING AND CONFIGURATION. FOR SPLICE DETAILS, SEE SHA STD. NO. BR-SS(7.09)-80-113.
2. FOR COMPRESSION SEAL SIZES, SEE SHA STD. NO. BR-SS(7.01)-77-63 MOD. ON DWG. NO. STD-4.
3. FOR FINGER JOINT SIZES, SEE TABLE ON THIS SHEET.
4. CONTRACTOR SHALL MAINTAIN AND PROTECT EXISTING REINFORCING STEEL BARS TO BE INCORPORATED IN THE NEW CONSTRUCTION.

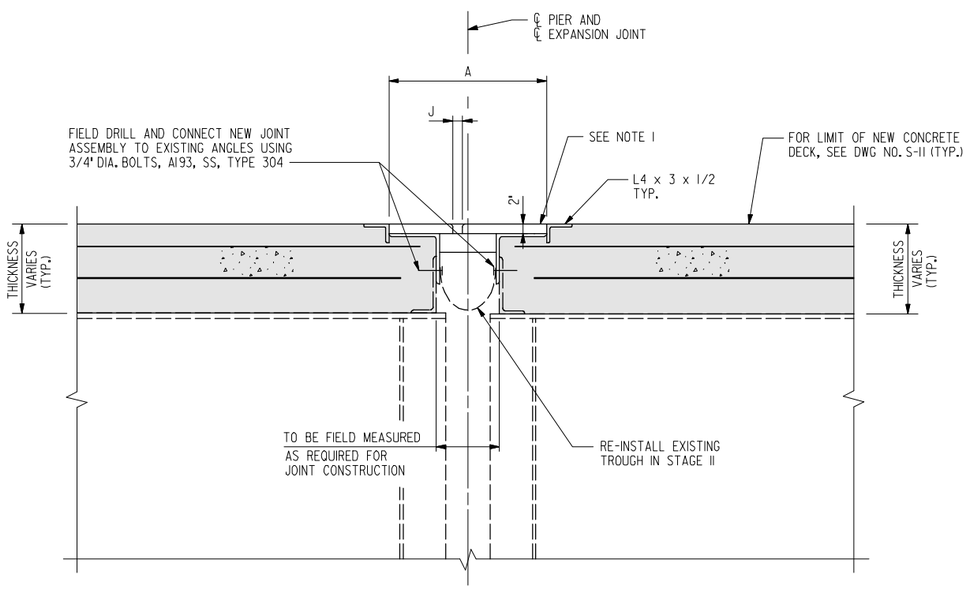

SECTION AT OVERHANG

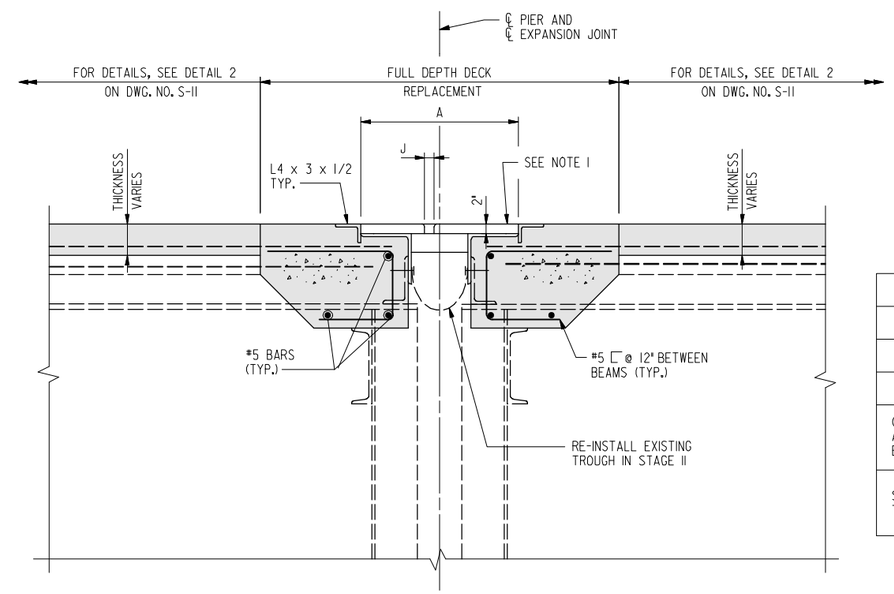

SECTION BETWEEN BEAMS

CONSTRUCTION DETAILS AT PIERS – JOINT TYPE 2

SCALE: 1" = 1'-0"

FINGER JOINT TABLE

DIMENSION	PIER 1	PIER 5
A	25 1/2"	26"
J @ 60° F	1 1/2"	1 3/4"
OPENING ADJUST. EVERY 10° F	1/4"	5/16"
SKEW ANGLE TO ℄ FINGER	47°-00'-00"	48°-09'-32"

RK&K
81 MOSHER STREET | BALTIMORE, MD 21217
PH: (410) 728-2900 FAX: (410) 728-3180
Engineers Construction Managers Planners Scientists
www.rkk.com

ALA
ATHAVALE, LYSTAD & ASSOCIATES INC.
Consulting Engineers Rockville, Maryland

MARYLAND TRANSPORTATION AUTHORITY
Engineering Division

ADDENDUMS & REVISIONS

NO.	DESCRIPTION	BY	DATE

I-95 FROM MORAVIA ROAD TO THE FORT McHENRY TUNNEL - PHASE 1 - SOUTHBOUND

I-95 (BALTIMORE CITY)

BRIDGE NO. BCW 596-2 - I-95 S.B. OVER CANTON RAILROAD TO HERRING RUN

DECK JOINTS DETAILS - 4

DESIGNED BY K.A. | DRAWN BY J.E. | CHECKED BY D.W.

CONST. REVIEW BY | DATE DECEMBER 2009 | SCALE AS SHOWN

CONTRACT NO. FT 928-000-006

DRAWING NO. **S-23**

SHEET NO. 105 OF 188

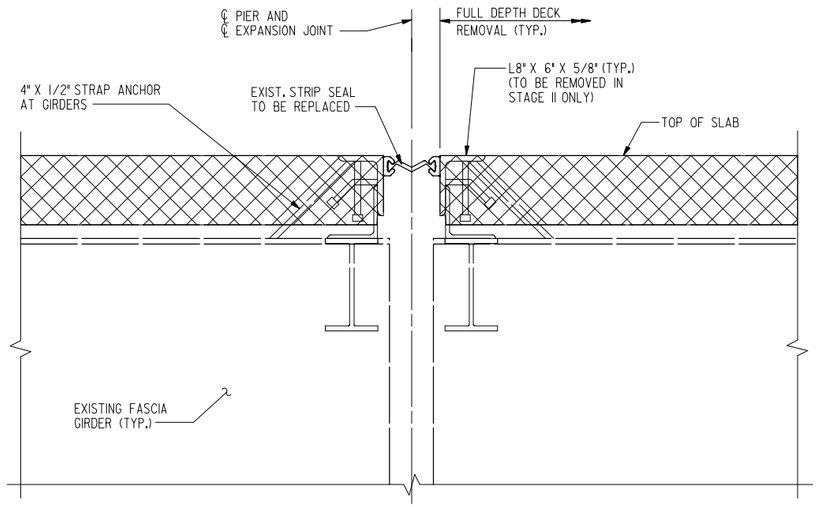

SECTION AT OVERHANG

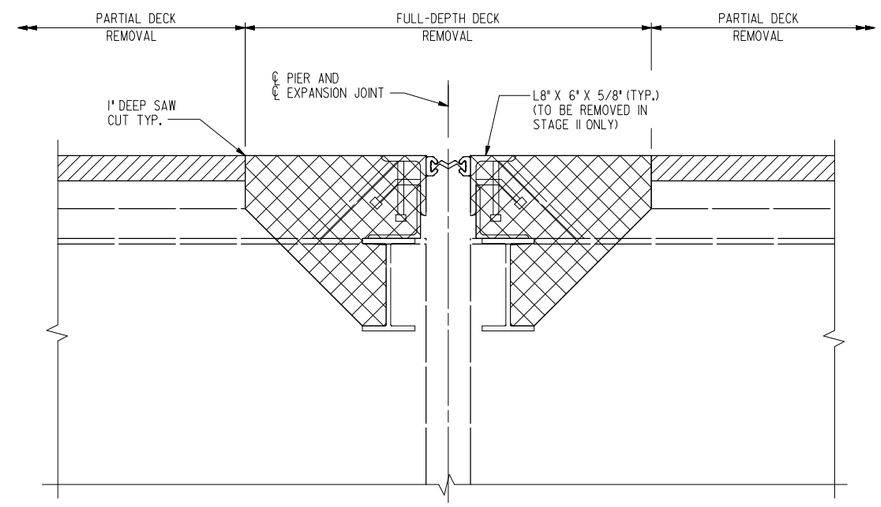

SECTION BETWEEN BEAMS

REMOVAL DETAILS – JOINT TYPE 3

SCALE: 1" = 1'-0"

NOTES:

1. FOR LIMIT OF WORK IN STAGES I AND II, SEE DWG. NOS. S-20 AND S-21.
2. CONTRACTOR SHALL REPLACE THE STRIP SEAL FOR THE ENTIRE ROADWAY JOINT LENGTH AFTER JOINT ASSEMBLY AND DECK IS COMPLETED. CONTRACTOR SHALL FIELD VERIFY THE ACTUAL JOINT OPENING PRIOR TO CONSTRUCTION. FOR STRIP SEAL SIZES, SEE TABLE ON THIS SHEET.
3. CONTRACTOR SHALL INSTALL DRAINAGE TROUGH UNDER THE EXISTING STRIP SEAL ON PIERS 7, 10, 12, 15, 17, 21 AND 22 (FULL LENGTH) INCLUDING COLLECTOR BASINS AND DRAIN PIPES. FOR DETAILS, SEE SHA STD. NOS. BR-SS(7.17)-95-313 AND BR-SR(0.05)-95-308. CONTRACTOR SHALL SUBMIT SHOP DRAWINGS SHOWING DETAILS OF THE NEW TROUGH, COLLECTOR BASINS, CONNECTION DETAILS AND SUPPORTS FOR THE ENGINEER'S APPROVAL.
4. CONTRACTOR SHALL CONNECT THE NEW DRAIN PIPE FROM THE NEW DRAINAGE TROUGH TO THE EXISTING DRAIN PIPE ATTACHED TO THE PIER CAP AND COLUMN, WHERE APPLICABLE.
5. FOR ADDITIONAL DETAILS NOT SHOWN, SEE SHA STD. NO. BR-SS(7.03)-79-65.
6. FOR STRIP SEAL JOINT DETAILS AT PARAPET, SEE DWG NO. S-25.
7. REMOVAL AND RE-CONSTRUCTION OF NEW STRIP SEAL JOINT WILL BE MEASURED AND PAID FOR AT THE CONTRACT UNIT PRICE PER LINEAR FOOT FOR JOINT MODIFICATION TYPE 3. PAYMENT WILL INCLUDE INSTALLATION OF NEW SEAL, STEEL ANGLES, AND ALL INCIDENTALS NECESSARY TO COMPLETE THE WORK.
8. COST FOR THE NEW TROUGH WILL BE MEASURED AND PAID FOR AT THE CONTRACT UNIT PRICE PER LINEAR FOOT FOR "DRAINAGE TROUGH FOR ROADWAY JOINT" PAY ITEM. PAYMENT WILL BE FULL COMPENSATION FOR TROUGH INSTALLATION, SHOP DRAWINGS, COLLECTOR BASINS, SUPPORTS, STEEL ANGLES, STEEL PLATES, DOWNSPOUTS, CONNECTION TO DRAIN PIPES, AND ALL INCIDENTALS NECESSARY TO COMPLETE THE WORK.

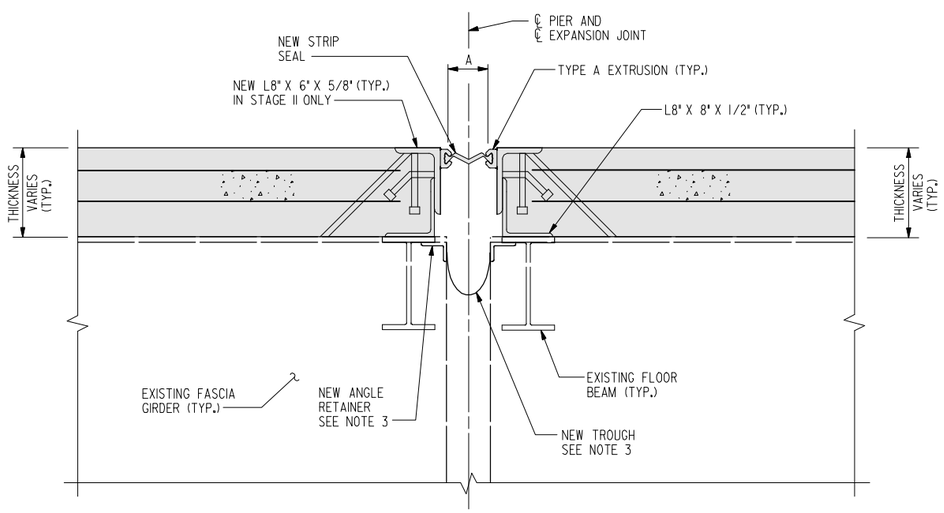

SECTION AT OVERHANG

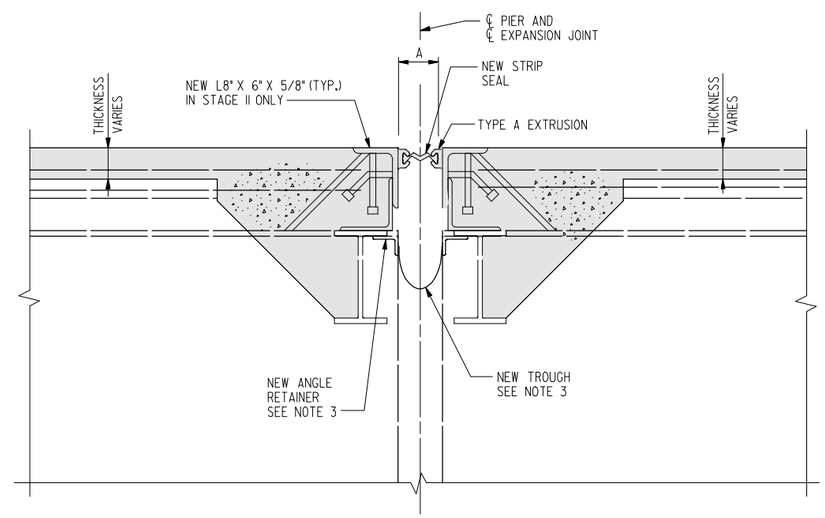

SECTION BETWEEN BEAMS

CONSTRUCTION DETAILS – JOINT TYPE 3

SCALE: 1" = 1'-0"

STRIP SEAL TABLE

LOCATION	A @ 60°F	OPENING ADJ. AT EVERY 10°F
PIER 7	2"	5/16"
PIER 10	2"	1/4"
PIER 12	2 1/8"	1/4"
PIER 15	2 1/8"	1/4"
PIER 17	2 1/2"	5/16"
PIER 21	2 1/2"	1/4"
PIER 22	1 1/2"	1/8"

LEGEND:

- INDICATES PORTION OF EXISTING DECK TO BE PARTIALLY REMOVED
- INDICATES PORTION OF EXISTING STRUCTURE TO BE REMOVED.
- INDICATES NEW CONSTRUCTION

RK&K
81 MOSHER STREET | BALTIMORE, MD 21217
PH: (410) 728-2900 FAX: (410) 728-3180
Engineers Construction Managers Planners Scientists
www.rkk.com

ALA
ATHAVALE, LYSTAD & ASSOCIATES INC.
Consulting Engineers Rockville, Maryland

MARYLAND TRANSPORTATION AUTHORITY
Engineering Division

ADDENDUMS & REVISIONS

NO.	DESCRIPTION	BY	DATE

I-95 FROM MORAVIA ROAD TO THE FORT McHENRY TUNNEL - PHASE 1 - SOUTHBOUND
I-95 (BALTIMORE CITY)
BRIDGE NO. BCW 596-2 - I-95 S.B. OVER CANTON RAILROAD TO HERRING RUN
DECK JOINTS DETAILS - 5

DESIGNED BY K.A. | DRAWN BY J.E. | CHECKED BY D.W.
CONST. REVIEW BY | DATE DECEMBER 2009 | SCALE AS SHOWN

CONTRACT NO. FT 928-000-006
DRAWING NO. S-24
SHEET NO. 106 OF 188

NOTES:

1. FOR RETAINER ANGLE AND SEAL DETAILS, SEE SHA STD. NO. BR-SS(7.01)-77-63 (MODIFIED).
2. FOR COMPRESSION SEAL DETAILS AT BEAMS, SEE SHA STD. NO. BR-SS(7.03)-79-65.
3. FOR DETAILS OF COMPRESSION SEAL IN PARAPET, SEE SHA STD. NO. BR-SS(7.08)-03-97.
4. CONTRACTOR SHALL FIELD VERIFY JOINT OPENINGS TO CONFIRM SIZE OF SEALS PRIOR TO CONSTRUCTION.
5. FOR LOCATIONS OF SECTIONS C-C AND D-D, SEE DWG. NO. S-20.

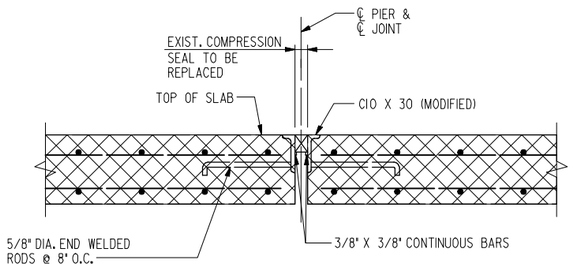

SECTION C–C

SCALE: 1" = 1'-0"
(AT OVERHANG)

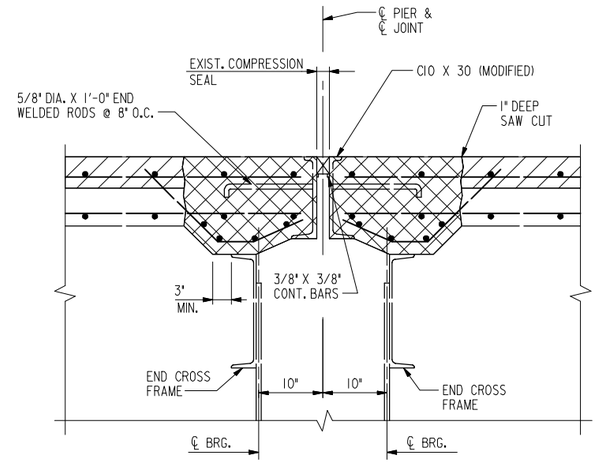

SECTION D–D

SCALE: 1" = 1'-0"
(BETWEEN BEAMS)

REMOVAL SECTION AT PIER 13 – JOINT TYPE I

SCALE: 1" = 1'-0"

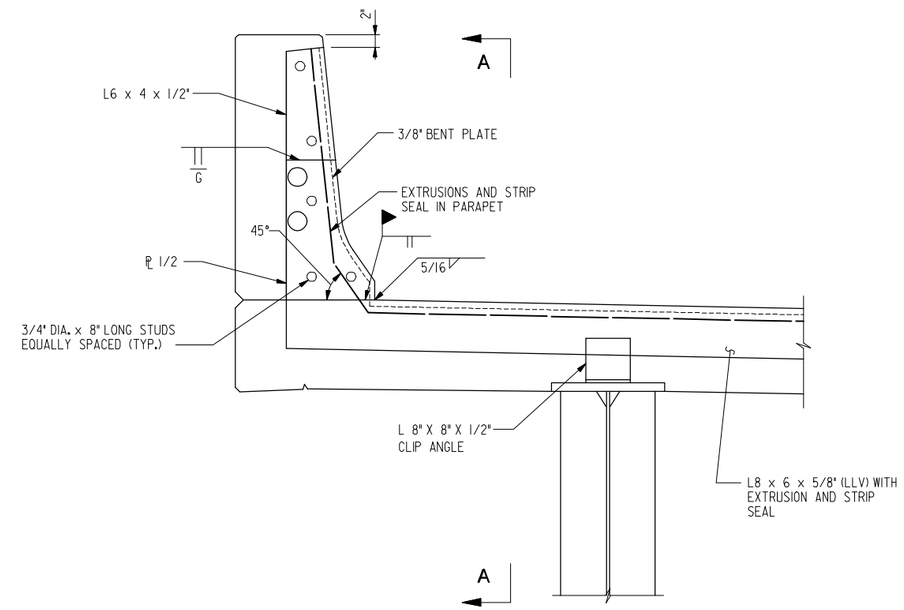

TYPICAL STRIP JOINT IN PARAPETS

SCALE: 1" = 1'-0"

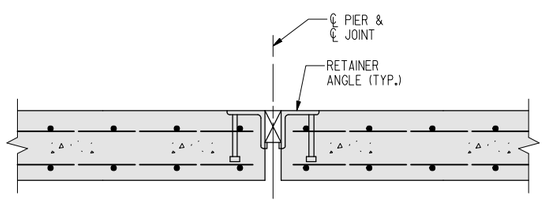

SECTION C–C

SCALE: 1" = 1'-0"
(AT OVERHANG)

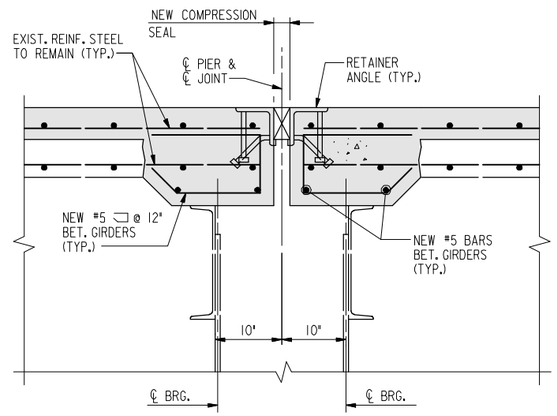

SECTION D–D

SCALE: 1" = 1'-0"
(BETWEEN BEAMS)

NEW CONSTRUCTION SECTION AT PIER 13 – JOINT TYPE I

SCALE: 1" = 1'-0"

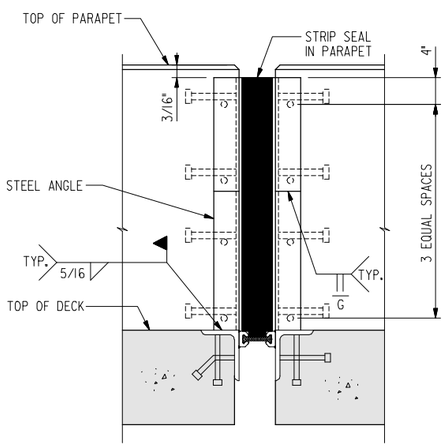

VIEW A–A

SCALE: 1" = 1'-0"

LEGEND:

- INDICATES PORTION OF EXISTING DECK TO BE PARTIALY REMOVED.
- INDICATES PORTION OF EXISTING STRUCTURE TO BE REMOVED.
- INDICATES NEW CONSTRUCTION

RK&K
81 MOSHER STREET | BALTIMORE, MD 21217
PH: (410) 728-2900 FAX: (410) 728-3180
Engineers Construction Managers Planners Scientists
www.rkk.com

ALA
ATHAVALE, LYSTAD & ASSOCIATES INC.
Consulting Engineers Rockville, Maryland

MARYLAND TRANSPORTATION AUTHORITY
Engineering Division

ADDENDUMS & REVISIONS			
NO.	DESCRIPTION	BY	DATE

I-95 FROM MORAVIA ROAD TO THE FORT McHENRY TUNNEL - PHASE 1 - SOUTHBOUND
I-95 (BALTIMORE CITY)
BRIDGE NO. BCW 596-2 - I-95 S.B. OVER CANTON RAILROAD TO HERRING RUN
DECK JOINTS DETAILS - 6

CONTRACT NO. FT 928-000-006
DRAWING NO. S-25

DESIGNED BY K.A. | DRAWN BY J.E. | CHECKED BY D.W.
CONST. REVIEW BY | DATE DECEMBER 2009 | SCALE AS SHOWN

FILE:r:\49562\dgn\SB\proj\596_S-25_Deck Joint Details - 6.dgn
DATE: Friday, December 04, 2009 AT 02:58 PM
r:\49562\dgn\SB\proj\596_S-25_Deck Joint Details - 6.dgn
Friday, December 04, 2009 AT 02:58 PM

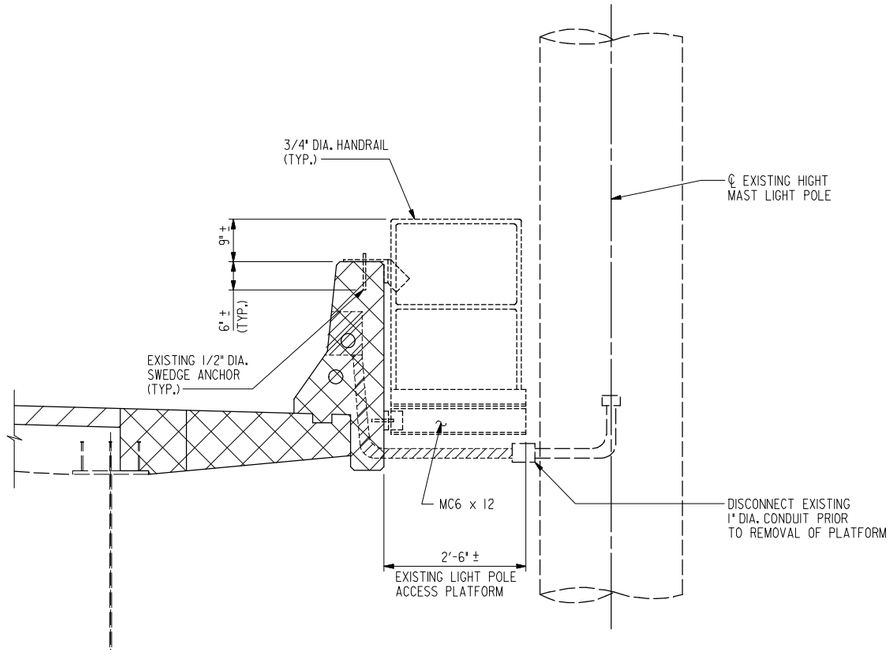

STAGE II – REMOVAL
LIGHT POLE ACCESS PLATFORM DETAIL
SCALE: 3/4" = 1'-0"

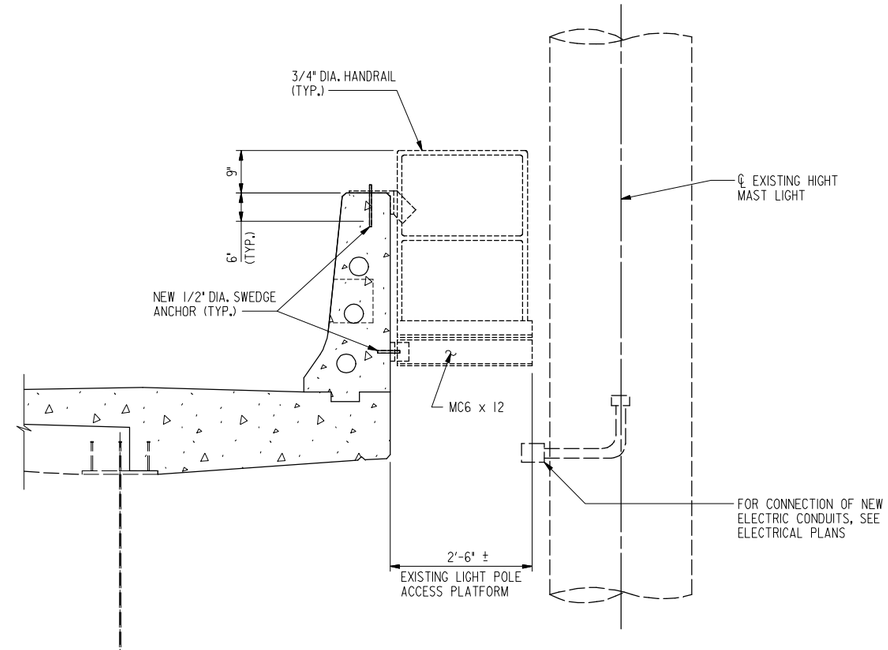

STAGE II – CONSTRUCTION
LIGHT POLE ACCESS PLATFORM DETAIL
SCALE: 3/4" = 1'-0"

NOTES:

1. CONTRACTOR SHALL REMOVE AND SALVAGE ALL EXISTING PLATFORMS ATTACHED TO MEDIAN PARAPET AT LIGHT POLES. EXISTING ELECTRIC CONDUITS SHALL BE DISCONNECTED PRIOR TO REMOVAL WORK.
2. CONTRACTOR SHALL INSTALL THE ACCESS PLATFORMS TO THE NEW 42" F-SHAPE PARAPET USING THE SAME CONNECTION PLATES USED ON EXISTING BRIDGE.
3. CONTRACTOR SHALL CONNECT THE EXISTING ELECTRIC CONDUITS FROM LIGHT POLE TO NEW CONDUITS IN THE NEW MEDIAN PARAPET, SEE STANDARD DETAILS.
4. FOR LOCATION OF LIGHT POLES, SEE GENERAL PLAN AND ELEVATION SHEETS.
5. COST FOR REMOVAL, SALVAGE AND RE-INSTALLING THE EXISTING ACCESS PLATFORM SHALL BE INCLUDED IN THE CONTRACT LUMP SUM PRICE FOR "REMOVAL OF PORTION OF EXISTING STRUCTURE". PAYMENT WILL BE FULL COMPENSATION FOR TOOLS, LABOR, EQUIPMENT AND ALL INCIDENTAL NECESSARY TO COMPLETE THE WORK.

LEGEND:

INDICATES PORTION OF EXISTING CONDUIT TO BE REMOVED.

INDICATES PORTION OF EXISTING STRUCTURE TO BE REMOVED.

RK&K
81 MOSHER STREET | BALTIMORE, MD 21217
PH: (410) 728-2900 FAX: (410) 728-3160
Engineers Construction Managers Planners Scientists
www.rkk.com

ALA
ATHAVALE, LYSTAD & ASSOCIATES INC.
Consulting Engineers Rockville, Maryland

MARYLAND TRANSPORTATION AUTHORITY
Engineering Division

ADDENDUMS & REVISIONS

NO.	DESCRIPTION	BY	DATE

I-95 FROM MORAVIA ROAD TO THE
FORT McHENRY TUNNEL - PHASE 1 - SOUTHBOUND
I-95 (BALTIMORE CITY)
BRIDGE NO. BCW 596-2 - I-95 S.B. OVER CANTON RAILROAD TO HERRING RUN
MISCELLANEOUS DETAILS

DESIGNED BY K.A. | DRAWN BY J.E. | CHECKED BY D.W.
CONST. REVIEW BY | DATE DECEMBER 2009 | SCALE AS SHOWN

CONTRACT NO. FT 928-000-006
DRAWING NO. S-26
SHEET NO. 108 OF 188

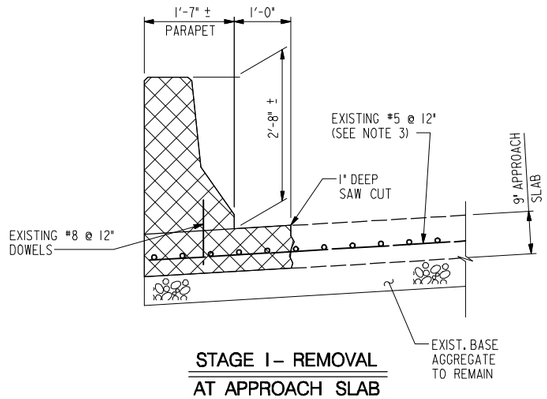

STAGE I – REMOVAL AT APPROACH SLAB

SCALE: 3/4" = 1'-0"

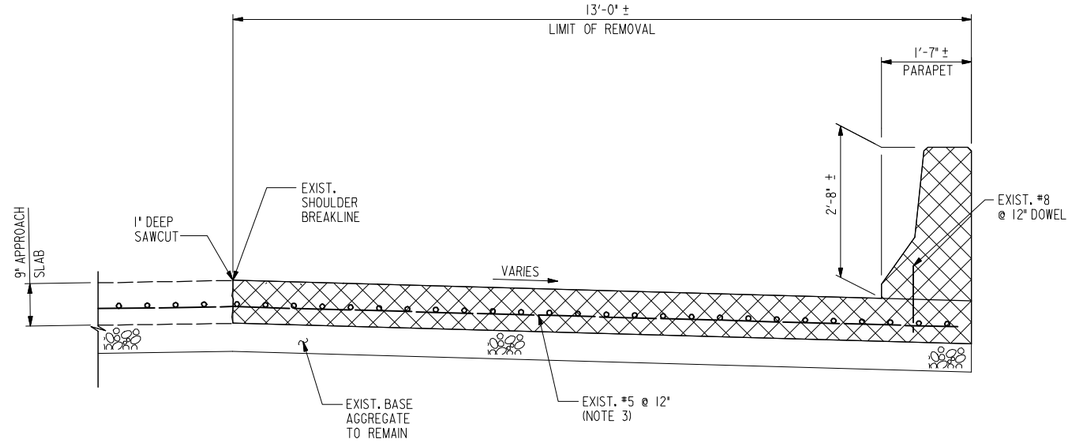

STAGE II – REMOVAL AT APPROACH SLAB

SCALE: 3/4" = 1'-0"

NOTES:

1. FOR CONCRETE SPECIFICATIONS, SEE GENERAL NOTES.
2. ALL REINFORCING STEEL IN APPROACH SLABS SHALL BE EPOXY COATED.
3. CONTRACTOR SHALL PROTECT EXISTING REINFORCING STEEL TO BE INCORPORATED INTO NEW CONSTRUCTION. MAINTAIN MIN. 2'-0" LAP LENGTH TO TIE WITH NEW #5 @ 12" BARS.
4. EXPOSED EXISTING REINFORCING BARS TO REMAIN SHALL BE THOROUGHLY CLEANED AND FIELD EPOXY COATED.
5. COST OF APPROACH SLAB WILL BE MEASURED AND PAID FOR AT THE CONTRACT UNIT PRICE PER CUBIC YARD FOR CONCRETE FOR APPROACH SLAB PAY ITEM.
6. COST OF PARAPET ON APPROACH SLAB SHALL BE INCLUDED IN CONTRACT LUMP SUM PRICE FOR CONCRETE PARAPET PAY ITEM.
7. THE EXISTING APPROACH SLAB AT THE SOUTH ABUTMENT HAS ASPHALT OVERLAY. REMOVAL AND PLACEMENT OF THE ASPHALT OVERLAY SHALL BE INCLUDED IN THE ROADWAY PAY ITEMS.

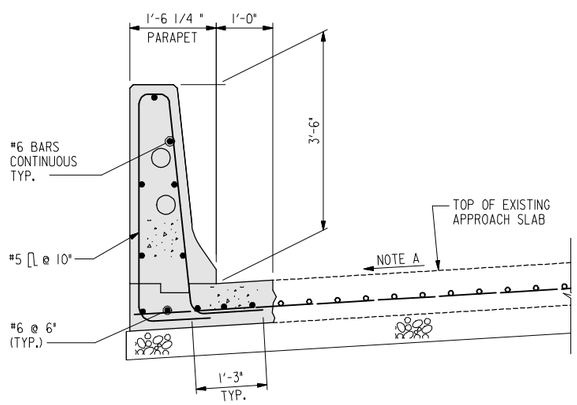

STAGE I – CONSTRUCTION AT APPROACH SLAB

SCALE: 3/4" = 1'-0"

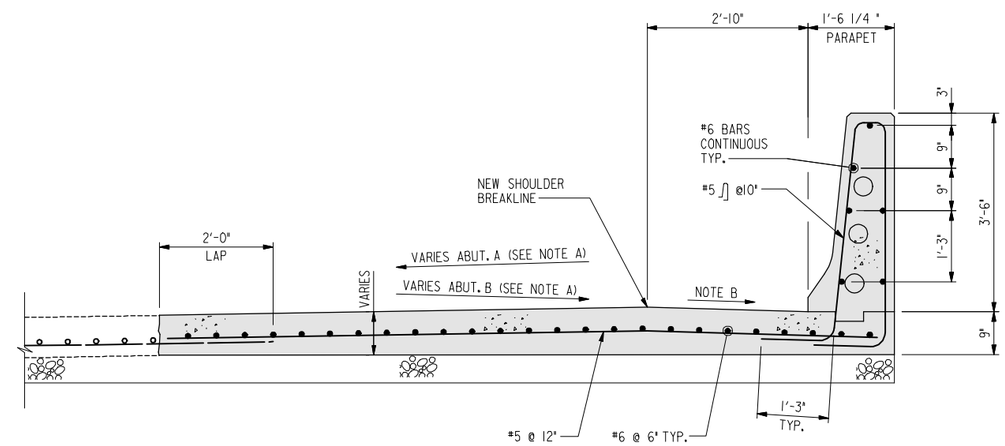

STAGE II – CONSTRUCTION AT APPROACH SLAB

SCALE: 3/4" = 1'-0"

LEGEND:

- PORTION OF STRUCTURE TO BE REMOVED
- NEW CONSTRUCTION

NOTE A:

CONTRACTOR SHALL MATCH EXISTING CROSS SLOPE.

NOTE B:

FOR CROSS SLOPE INFORMATION, SEE ROADWAY PLANS DWG. NOS. SE-01 THRU SE-03.

RK&K
81 MOSHER STREET | BALTIMORE, MD 21217
PH: (410) 728-2900 FAX: (410) 728-3180
Engineers Construction Managers Planners Scientists
www.rkk.com

ALA
ATHAVALE, LYSTAD & ASSOCIATES INC.
Consulting Engineers Rockville, Maryland

MARYLAND TRANSPORTATION AUTHORITY
Engineering Division

ADDENDUMS & REVISIONS			
NO.	DESCRIPTION	BY	DATE

I-95 FROM MORAVIA ROAD TO THE FORT McHENRY TUNNEL - PHASE 1 - SOUTHBOUND

I-95 (BALTIMORE CITY)
BRIDGE NO. BCW 596-2 - I-95 S.B. OVER CANTON RAILROAD TO HERRING RUN
APPROACH SLAB DETAILS

DESIGNED BY K.A.	DRAWN BY J.E.	CHECKED BY D.W.
CONST. REVIEW BY	DATE DECEMBER 2009	SCALE AS SHOWN

CONTRACT NO. FT 928-000-006
DRAWING NO. **S-27**
SHEET NO. 109 OF 188

SUBSTRUCTURE REPAIR SCHEDULE

BRIDGE	PIER	LOCATION	REPAIR TYPE / ESTIMATED QUANTITY		
			TYPE 1	TYPE 2	TYPE 3
BCW 596-1 (NB)	N-12	CAP BEAM	20 LF	44 CF	2 CF
		EAST COLUMN	—	4 CF	—
		WEST COLUMN	—	1 CF	—
	N-13	CAP BEAM	—	—	—
	N-14	CAP BEAM	—	3 CF	—
	N-15	CAP BEAM	4 LF	153 CF	35 CF
		EAST COLUMN	—	29 CF	—
		WEST COLUMN	—	3 CF	—
	N-16	CAP BEAM	26 LF	129 CF	1 CF
		EAST COLUMN	—	15 CF	—
		WEST COLUMN	—	4 CF	—
	N-17	CAP BEAM	—	98 CF	1 CF
		EAST COLUMN	—	21 CF	—
		MIDDLE COLUMN	—	10 CF	—
		WEST COLUMN	—	1 CF	—
BCW 596-2 (SB)	S-12	CAP BEAM	6 LF	31 CF	1 CF
		EAST COLUMN	—	3 CF	—
		WEST COLUMN	—	12 CF	—
	S-13	CAP BEAM	21 LF	202 CF	—
		EAST COLUMN	—	9 CF	—
		WEST COLUMN	—	4 CF	—
	S-14	CAP BEAM	—	1 CF	—
	S-15	CAP BEAM	11 LF	78 CF	3 CF
		EAST COLUMN	—	6 CF	—
		WEST COLUMN	—	6 CF	—
	S-17	CAP BEAM	3 LF	34 CF	—
		EAST COLUMN	—	10 CF	—
		WEST COLUMN	—	4 CF	—

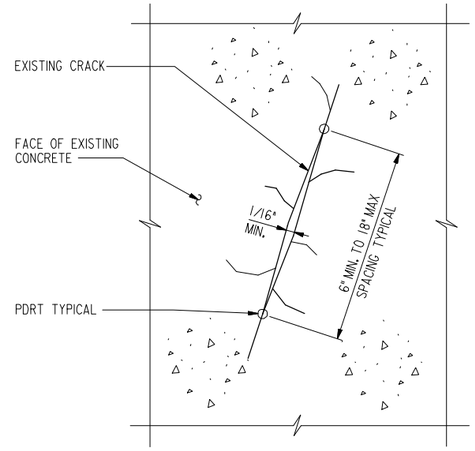

REPAIR TYPE 1 – CRACK REPAIR

N.T.S.

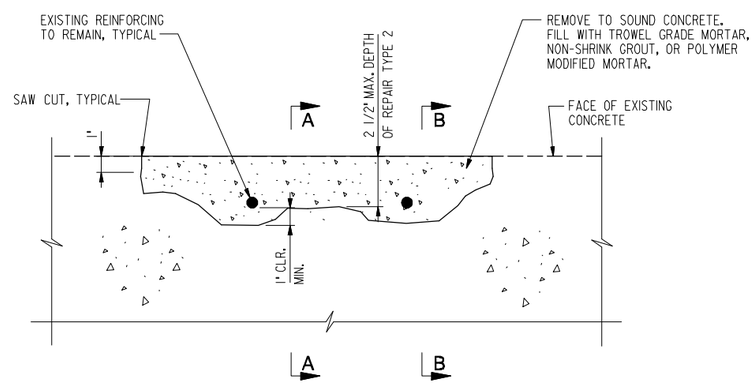

REPAIR TYPE 2 – CONCRETE PATCH

N.T.S.

NOTES:

1. REPAIR TYPE 1 APPLIES TO CRACKS HAVING A MINIMUM OPENING GREATER THAN 1/16". CRACKS HAVING A MAXIMUM OPENING OF 1/16" OR LESS SHALL NOT BE REPAIRED.
2. REPAIR TYPE 2 APPLIES TO SPALLED AND/OR DELAMINATED AREAS OF CONCRETE HAVING A MAXIMUM DEPTH OF UP TO 2 1/2 " AS MEASURED FROM THE ORIGINAL FINISHED SURFACE. MAXIMUM DEPTH SHALL BE MEASURED PRIOR TO ADDITIONAL REMOVAL BEHIND REINFORCING AS SHOWN IN DETAILS PROVIDED. ADDITIONAL REMOVAL TO OBTAIN 1" CLEAR AROUND EXISTING REINFORCING WILL NOT BE CONSIDERED IN DETERMINATION OF TYPE 2 VS. TYPE 3 REPAIRS.
3. REPAIR TYPE 3 APPLIES TO AREAS WHERE THE DEPTH OF SPALLED AND/OR DELAMINATED CONCRETE EXCEEDS A DEPTH OF 2 1/2 " AS MEASURED FROM THE ORIGINAL FINISHED SURFACE.
4. SPALLS HAVING A MAXIMUM DEPTH OF LESS THAN 1/2 " SHALL NOT BE REPAIRED UNLESS THE EXISTING REINFORCING IS EXPOSED.
5. AREAS TO BE REPAIRED SHALL BE PREPARED BY FIRST REMOVING ALL DETERIORATED CONCRETE. SOUND CONCRETE SHALL THEN BE REMOVED BACK TO THE LEAST RECTANGULAR OR SQUARE AREA SURROUNDING THE DETERIORATED CONCRETE. THE CONTRACTOR IS ADVISED THAT A PORTION OF EACH REPAIR WILL REQUIRE REMOVAL OF PORTIONS OF SOUND CONCRETE.
6. FOR ALL REPAIR PROCEDURE NOTES AND REPAIR TYPE 3 DETAILS, SEE DRAWING NO. S-29.
7. FOR ADDITIONAL DETAILS AND REQUIREMENTS, SEE SPECIAL PROVISIONS.
8. ALL REPAIRS MADE TO HORIZONTAL SURFACES SHALL BE MADE IN A FASHION TO PROVIDE POSITIVE DRAINAGE AWAY FROM STRUCTURAL ELEMENTS. MINIMUM 1/4 " PER FOOT.
9. AS A FIRST ORDER OR WORK, THE CONTRACT SHALL IDENTIFY A TEST REPAIR LOCATION FOR EACH TYPE OF REPAIR AND MATERIAL TO BE USED. AFTER REPAIRS ARE PERFORMED, THE ENGINEER WILL INSPECT THE AREA FOR SOUNDNESS AND QUALITY OF REPAIR. ANY AREAS FOUND TO BE UNSOUND SHALL BE REMOVED AND REPLACED. THE AUTHORITY MAY ELECT TO MODIFY THE REPAIR MATERIALS OR PROCEDURES AT THAT TIME. THIS TESTING SHALL BE COMPLETED PRIOR TO PROCEEDING TO ADDITIONAL LOCATIONS AND PRIOR TO ORDERING MATERIALS FOR OTHER LOCATIONS.
10. THE LOCATIONS, LIMITS AND QUANTITIES OF ALL REPAIRS IDENTIFIED ON THESE PLANS ARE APPROXIMATE, AND ARE INTENDED FOR USE IN DEVELOPING PRICES FOR REPAIRS. ACTUAL LOCATIONS, LIMITS AND QUANTITIES SHALL BE DETERMINED IN THE FIELD AND SHALL BE APPROVED BY THE ENGINEER. IF AT ANY POINT DURING THE REMOVAL PROCESS THE DEPTH OF DETERIORATED CONCRETE EXCEEDS 6", THE CONTRACTOR SHALL STOP WORK IMMEDIATELY AND NOTIFY THE ENGINEER. SEE SPECIAL PROVISIONS.

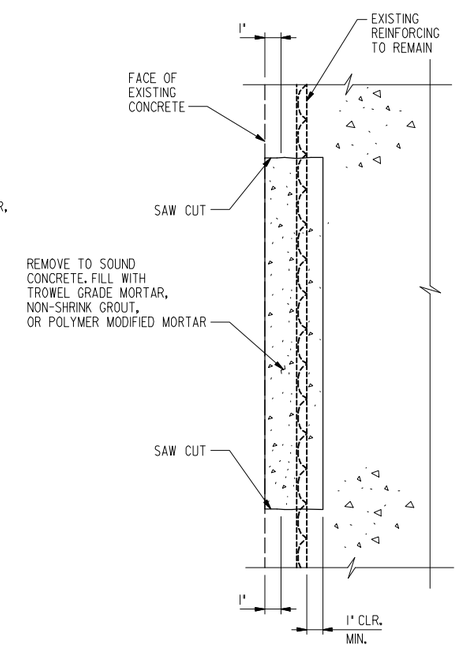

(EXPOSED REINFORCING)

SECTION A–A

N.T.S.

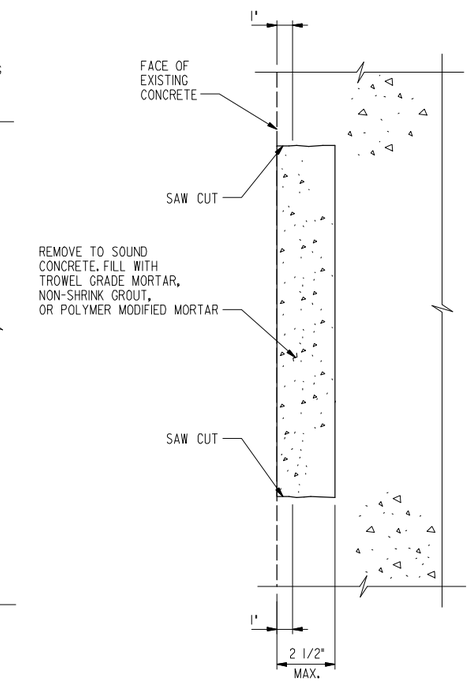

(NO EXPOSED REINFORCING)

SECTION B–B

N.T.S.

RK&K
81 MOSHER STREET | BALTIMORE, MD 21217
PH: (410) 728-2900 FAX: (410) 728-3180
Engineers Construction Managers Planners Scientists
www.rkk.com

ALA
ATHAVALE, LYSTAD & ASSOCIATES INC.
Consulting Engineers Rockville, Maryland

MARYLAND TRANSPORTATION AUTHORITY

Engineering Division

ADDENDUMS & REVISIONS

NO.	DESCRIPTION	BY	DATE

I-95 FROM MORAVIA ROAD TO THE FORT McHENRY TUNNEL - PHASE 1 - SOUTHBOUND

I-95 (BALTIMORE CITY)

BRIDGE NO. BCW 596-2 - I-95 S.B. OVER CANTON RAILROAD TO HERRING RUN

SUBSTRUCTURE REPAIR SCHEDULE, GENERAL NOTES AND DETAILS

CONTRACT NO. FT 928-000-006

DRAWING NO. S–28

DESIGNED BY K.A. | DRAWN BY J.E. | CHECKED BY D.W.

CONST. REVIEW BY | DATE DECEMBER 2009 | SCALE AS SHOWN

SHEET NO. 110 OF 188

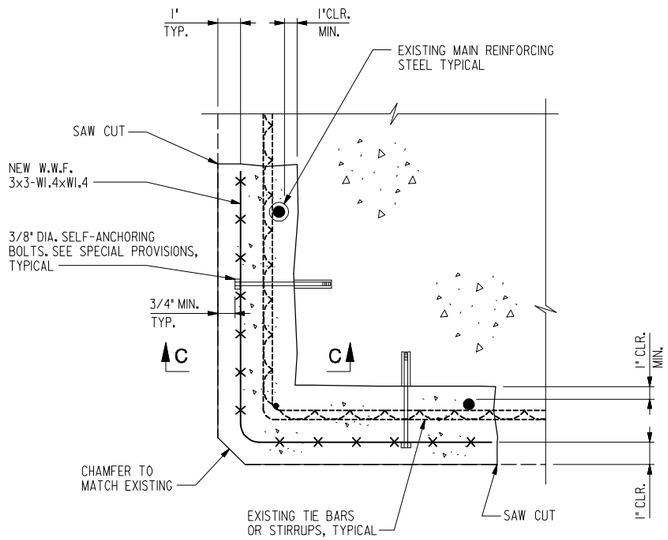

REPAIR TYPE 3 – CONCRETE REPAIR

N.T.S.

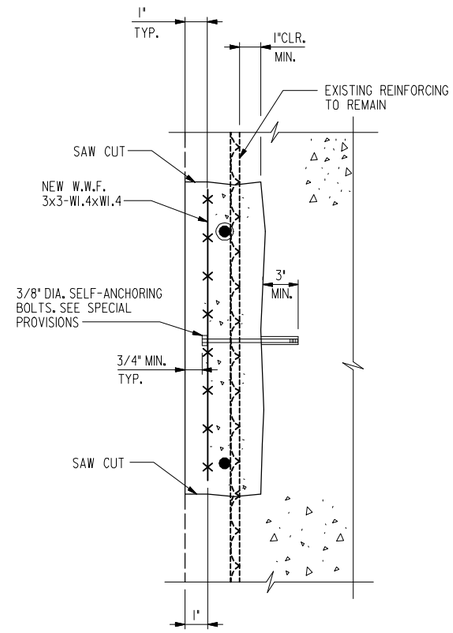

SECTION C–C

N.T.S.

REPAIR TYPE 1 - CRACK REPAIR NOTES:

1. CLEAN CRACK OF ALL MATTER INCLUDING LOOSE CONCRETE, DIRT, VEGETATION, GREASE, SALT AND ALL OTHER CONTAMINANTS AND MATERIAL BY ABRASIVE BLAST CLEANING.
2. APPLY SURFACE SEAL MATERIAL ACROSS THE CRACK OPENING IN ACCORDANCE WITH THE MANUFACTURER'S RECOMMENDATIONS.
3. INSTALL ENTRY PORTS IN ACCORDANCE WITH MANUFACTURER'S RECOMMENDATIONS.
4. AFTER THE SURFACE SEAL HAS SET, INJECT LOW VISCOSITY EPOXY ADHESIVE INTO THE LOWEST ENTRY PORT IN ACCORDANCE WITH THE MANUFACTUER'S RECOMMENDATIONS. CONTINUE INJECTING EPOXY ADHESIVE UNTIL EPOXY BEGINS TO FLOW OUT OF THE PORT AT THE NEXT HIGHER LEVEL.
5. REPEAT THE PROCEDURE UNTIL ALL THE PORTS HAVE BEEN FILLED.
6. ALLOW EPOXY TO CURE IN ACCORDANCE WITH THE MANUFACTURER'S RECOMMENDATIONS.
7. FOR ADDITIONAL DETAILS AND REQUIREMENTS, SEE SPECIAL PROVISIONS.
8. REPAIR TYPE 1 - CRACK REPAIR SHALL BE MEASURED PER LINEAR FOOT OF CRACK THAT IS REPAIRED. SEE SPECIAL PROVISIONS.

REPAIR TYPE 2 - CONCRETE PATCH NOTES:

1. ESTABLISH THE LIMITS OF REPAIR AS DETERMINED BY THE ENGINEER. THE LIMITS OF REPAIR SHALL BE THE SMALLEST SQUARE OR RECTANGULAR AREA THAT COMPLETELY SURROUNDS THE SPALLED/DETERIORATED EXISTING CONCRETE THAT IS TO BE REPAIRED.
2. SAW CUT (1" DEEP MIN.) AROUND THE LIMIT OF REPAIR ESTABLISHED IN NOTE 1.
3. REMOVE ALL DETERIORATED AND SOUND CONCRETE WITHIN THE SAW CUT AREA TO A ROUGH PLANE SURFACE. PROVIDE 1" MIN. CLEARANCE FOR ALL EXPOSED REINFORCING STEEL.
4. ABRASIVE BLAST CLEAN EXPOSED SOUND CONCRETE AND REINFORCING STEEL TO NEAR-WHITE METAL.
5. IF, IN THE OPINION OF THE ENGINEER, THE CROSS SECTIONAL AREA OF THE EXISTING REINFORCING STEEL IS DETERIORATED BY MORE THAN 20%, THE CONTRACTOR SHALL REPLACE THE REINFORCING IN ACCORDANCE WITH SECTION 421.03.07 OF THE SPECIFICATIONS.
6. APPLY EPOXY BONDING AGENT TO ALL EXPOSED CONCRETE SURFACES WITHIN THE AREA TO BE REPAIRED.
7. THE MATERIAL USED FOR REPAIR TYPE 2 SHALL BE A TROWEL GRADE OR POLYMER MODIFIED MORTAR OR NON-SHRINK GROUT, SEE SPECIAL PROVISIONS. MULTIPLE MATERIALS HAVE BEEN INCLUDED TO ACCOMMODATE THE VARIOUS TYPES AND LOCATIONS OF REPAIRS. THE CONTRACTOR SHALL DETERMINE THE APPROPRIATE TYPE OF REPAIR BASED ON THE ACTUAL WORK REQUIRED, SUBJECT TO APPROVAL OF THE ENGINEER. GENERALLY, TROWEL GRADE MORTAR SHALL BE USED TO PATCH SMALL LOCALIZED AREAS WHERE NO REINFORCING STEEL IS EXPOSED AND FORMWORK IS NOT REQUIRED. FOR LARGER AREAS AND LOCATIONS WHERE STEEL IS EXPOSED AND FORMWORK IS REQUIED, NON-SHRINK GROUT OR A POLYMER MODIFIED MORTAR SHALL BE USED AS APPROPRIATE AND BASED ON RECOMMENDATIONS FROM THE MATERIAL MANUFACTURER.
8. ALLOW REPAIRED AREAS TO CURE IN ACCORDANCE WITH THE MANUFACTURER'S RECOMMENDATIONS.
9. FOR ADDITIONAL DETAILS AND REQUIREMENTS, SEE SPECIAL PROVISIONS.
10. REPAIR TYPE 2 - CONCRETE PATCH REPAIR SHALL BE MEASURED PER CUBIC FOOT OF REPAIR IN PLACE. SEE SPECIAL PROVISIONS.

REPAIR TYPE 3 - CONCRETE REPAIR NOTES:

1. ESTABLISH THE LIMITS OF REPAIR AS DETERMINED BY THE ENGINEER. THE LIMITS OF REPAIR SHALL BE THE SMALLEST SQUARE OR RECTANGULAR AREA THAT COMPLETELY SURROUNDS THE SPALLED/DETERIORATED EXISTING CONCRETE THAT IS TO BE REPAIRED.
2. SAW CUT (1" DEEP MIN.) AROUND THE LIMIT OF REPAIR ESTABLISHED IN NOTE 1.
3. REMOVE ALL DETERIORATED AND SOUND CONCRETE WITHIN THE SAW CUT AREA TO A ROUGH PLANE SURFACE. PROVIDE 1" MIN. CLEARANCE FOR ALL EXPOSED MAIN REINFORCING STEEL, TIES AND STIRRUPS.
4. ABRASIVE BLAST CLEAN EXPOSED SOUND CONCRETE AND REINFORCING STEEL TO NEAR-WHITE METAL.
5. IF, IN THE OPINION OF THE ENGINEER, THE CROSS SECTIONAL AREA OF THE EXISTING REINFORCING STEEL IS DETERIORATED BY MORE THAN 20%, THE CONTRACTOR SHALL REPLACE THE REINFORCING IN ACCORDANCE WITH SECTION 421.03.07 OF THE SPECIFICATIONS.
6. INSTALL CONCRETE ANCHORS AND ATTACH WELDED WIRE FABRIC TO EXISTING REINFORCEMENT AND ALL ANCHORS. WELDED WIRE FABRIC SHALL BE TIED IN BOTH DIRECTIONS AT 12" MAXIMUM SPACING.
7. APPLY EPOXY BONDING AGENT TO ALL EXPOSED CONCRETE SURFACES WITHIN THE AREA TO BE REPAIRED.
8. THE MATERIAL USED FOR REPAIR TYPE 3 SHALL BE CAST-IN-PLACE CONCRETE, MODIFIED MIX NO. 6 (4,500 P.S.I) CONTAINING AGGREGATES NO GREATER THAN 3/8" NOMINAL SIZE, SEE SPECIAL PROVISIONS.
9. FILL CAVITY WITH REPAIR CONCRETE, FINISH AND CURE NEW CONCRETE IN ACCORDANCE WITH THE SPECIAL PROVISIONS.
10. FOR ADDITIONAL DETAILS AND REQUIREMENTS, SEE SPECIAL PROVISIONS.
11. REPAIR TYPE 3 - CONCRETE REPAIR SHALL BE MEASURED PER CUBIC FOOT OF REPAIR IN PLACE, SEE SPECIAL PROVISONS.

RK&K
81 MOSHER STREET | BALTIMORE, MD 21217
PH: (410) 728-2900 FAX: (410) 728-3180
Engineers Construction Managers Planners Scientists
www.rkk.com

ALA
ATHAVALE, LYSTAD & ASSOCIATES INC.
Consulting Engineers Rockville, Maryland

MARYLAND TRANSPORTATION AUTHORITY
Engineering Division

ADDENDUMS & REVISIONS

NO.	DESCRIPTION	BY	DATE

I-95 FROM MORAVIA ROAD TO THE FORT McHENRY TUNNEL - PHASE 1 - SOUTHBOUND
I-95 (BALTIMORE CITY)
BRIDGE NO. BCW 596-2 - I-95 S.B. OVER CANTON RAILROAD TO HERRING RUN
SUBSTRUCTURE REPAIR DETAILS AND PROCEDURES

CONTRACT NO. FT 928-000-006
DRAWING NO. S-29

DESIGNED BY K.A. | DRAWN BY J.E. | CHECKED BY D.W.
CONST. REVIEW BY | DATE DECEMBER 2009 | SCALE AS SHOWN

FILE: r:\49562\dgn\SB\proj\596_S-29_Substructure Repair Details and Procedures.dgn
DATE: Friday, December 04, 2009 AT 02:58 PM
r:\49562\dgn\SB\proj\596_S-29_Substructure Repair Details and Procedures.dgn
Friday, December 04, 2009 AT 02:58 PM

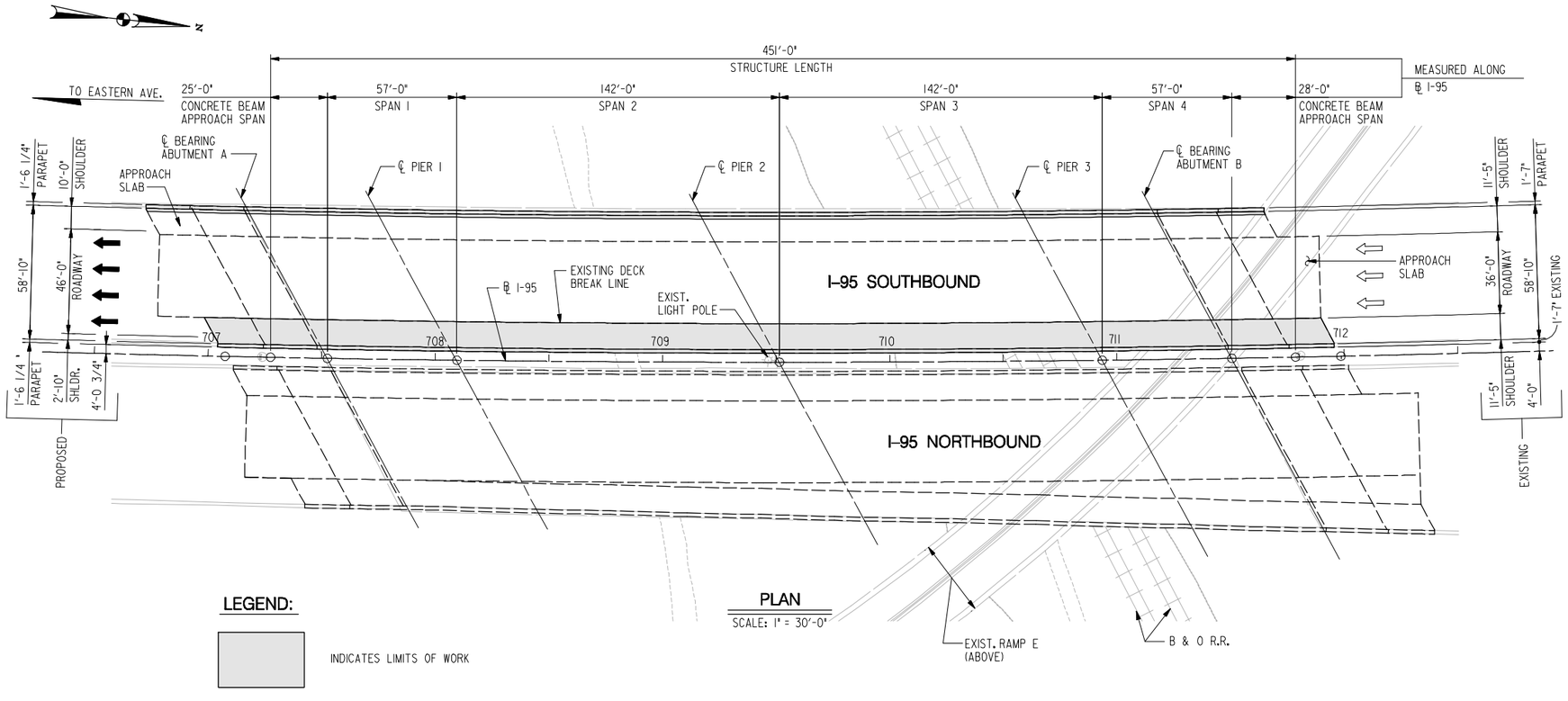

PLAN

SCALE: 1" = 30'-0"

LEGEND:

INDICATES LIMITS OF WORK

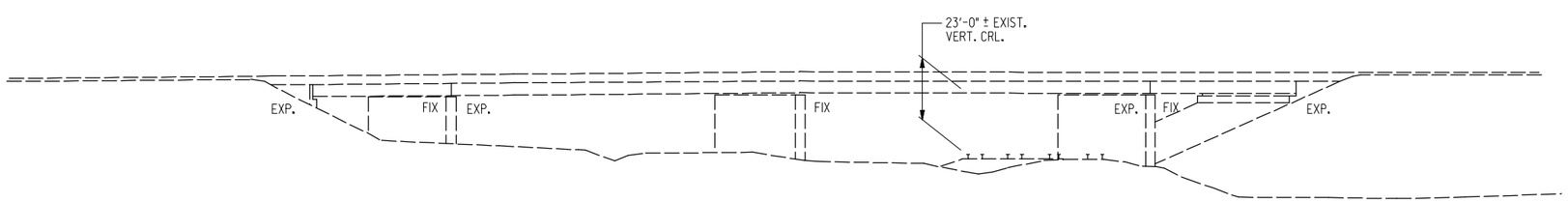

ELEVATION

SCALE: 1" = 30'-0"

GENERAL NOTES:

SPECIFICATIONS: - SHA SPECIFICATIONS DATED JULY 2008.
- REVISIONS THEREOF AND ADDITIONS THERETO, AND SPECIAL PROVISIONS FOR MATERIALS AND CONSTRUCTION.

AASHTO STANDARD SPECIFICATIONS FOR HIGHWAY BRIDGES DATED 2002 FOR DESIGN.

CONCRETE DESIGN: LOAD FACTOR DESIGN WITH THE EXCEPTION OF CONCRETE DECKS WHICH WILL BE DESIGNED BY THE SERVICE LOAD DESIGN METHOD. fc = 1350 PSI FOR CONCRETE BRIDGE DECK SLABS SUPPORTED BY STRINGERS.

REINFORCING STEEL DESIGN FOR DECK SLABS: fs = 24,000 PSI.

LOADING: HS-20, WITH PROVISIONS FOR FUTURE 2" WEARING SURFACE.

CONCRETE: ALL CONCRETE FOR ABUTMENT BACKWALLS, APPROACH SPANS AND SUPERSTRUCTURE DECK SHALL BE MODIFIED MIX NO. 6 (4500 PSI) WITH MAXIMUM SIZE OF AGGREGATE OF 3/4", SEE SPECIAL PROVISIONS. CONCRETE IN PARAPETS AND APPROACH SLABS SHALL BE MIX NO. 6 CONCRETE (4500 PSI).

REINFORCING STEEL: REINFORCING STEEL SHALL CONFORM TO ASTM A 615, GRADE 60. ALL SPLICES, NOT SHOWN, SHALL BE LAPPED AS PER MD SHA BAR LAP CHARTS. MINIMUM COVER FOR ANY BAR SHALL BE 2" UNLESS OTHERWISE NOTED.

FOR TIES AND STIRRUPS; STANDARD ACI BENDING TOLERANCES ARE MODIFIED TO PLUS (+) ZERO INCHES, MINUS (-) NORMAL ACI BENDING TOLERANCES.

ONLY GRADE 60 CAN BE USED ON THIS PROJECT.

REINFORCING STEEL IN THE FOLLOWING AREAS SHALL BE EPOXY COATED:
- ENTIRE SUPERSTRUCTURE (INCLUDING PARAPETS)
- ABUTMENT BACKWALLS AND APPROACH SPANS
- PARAPET PORTION OF APPROACH SPANS
- APPROACH SLABS INCLUDING BARRIERS

KEYS: ALL KEYS ARE NOMINAL SIZE.

CHAMFERS: ALL EXPOSED CORNERS OF ALL CONCRETE STRUCTURES SHALL BE CHAMFERED WITH 3/4" x 3/4" MILLED CHAMFERED STRIPS UNLESS NOTED OTHERWISE.

EXISTING STRUCTURE: ALL DIMENSIONS AFFECTED BY THE GEOMETRICS AND/OR LOCATION OF THE EXISTING STRUCTURE SHALL BE CHECKED IN THE FIELD BY THE CONTRACTOR, BEFORE ANY CONSTRUCTION IS DONE, AND BEFORE ANY REINFORCING STEEL, ETC., IS ORDERED OR FABRICATED. IT SHALL BE THE RESPONSIBILITY OF THE CONTRACTOR TO SUPPLY THE ENGINEER WITH ALL FIELD DIMENSIONS REQUIRED TO CHECK DETAIL DRAWINGS. THE +/- MARKS SHOWN WITH THE DIMENSIONS AND STATIONS DO NOT INDICATE ANY DEGREE OF PRECISION. THESE MARKS (+/-) INDICATE EXISTING DIMENSIONS AND STATIONS THAT MAY VARY AND DO REQUIRE FIELD VERIFICATION BY THE CONTRACTOR.

EXISTING STRUCTURE SHOWN IN LONG DASHED LINES.

PORTIONS OF EXISTING STRUCTURE SHOWN HATCHED, TO BE REMOVED AND RE-CONSTRUCTED ON I-95 SOUTHBOUND.

NOTES:

1. WORK ON THE SOUTHBOUND RIGHT (WEST) SHOULDER INVOLVES REMOVAL OF THE EXISTING PARAPET AND DECK OVERHANG. THE EXISTING PARAPET WILL BE REPLACED WITH 42" F-SHAPE PARAPET.
2. WORK ON THE SOUTHBOUND LEFT (EAST) SHOULDER INVOLVES REMOVAL OF EXISTING PARAPET AND DECK OVERHANG AND PARTIAL DECK REMOVAL TO THE EXISTING SHOULDER BREAKLINE. THE EXISTING PARAPET WILL BE REPLACED WITH 42" F-SHAPE PARAPET. THE EXISTING ROADWAY JOINTS SHALL BE REPLACED WITHIN LIMITS OF WORK TO MATCH NEW ROADWAY CROSS SLOPE.
3. CONTRACTOR SHALL REPLACE THE COMPRESSION SEALS AT THE SOUTHBOUND ABUTMENTS AND AT SOUTHBOUND PIERS 1 AND 3 FOR THE FULL WIDTH OF THE BRIDGE.
4. CONTROL JOINTS IN NEW SOUTHBOUND PARAPETS SHALL BE LOCATED AT EQUAL SPACING BETWEEN CENTERLINES OF PIERS AND ABUTMENTS. MAXIMUM SPACING OF CONTROL JOINTS SHALL BE 8'-0". PROVIDE A PARAFFIN JOINT AT CENTERLINE OF CONTINUOUS SPAN PIERS. FOR JOINT DETAILS, SEE SHA STD. NOS. BR-SS(6.37)-05-247B AND BR-SS(6.37)-05-247B MOD.
5. THE WIDTHS PROVIDED FOR PARTIAL DECK REMOVAL AND CROSS SLOPE ADJUSTMENT ASSUME THAT THE EXISTING CROSS SLOPE BREAK BETWEEN THE MEDIAN LANE AND SHOULDER IS 11'-5" FROM THE BOTTOM OF THE MEDIAN BRIDGE PARAPET. THE CONTRACTOR SHALL VERIFY THE LOCATION OF THE EXISTING CROSS SLOPE BREAK IN THE FIELD, AND IF IT IS DETERMINED THAT THE CROSS SLOPE BREAK IS LOCATED MORE THAN 11'-5" FROM THE BOTTOM OF THE BRIDGE PARAPET, THE CONTRACTOR SHALL MODIFY THE PARTIAL DECK REMOVAL AND CONCRETE OVERLAY TO PROVIDE THE CROSS SLOPE BREAK ADJUSTMENT FROM THE FIELD LOCATED MEDIAN LANE/ SHOULDER CROSS SLOPE BREAK. THE DECK CROSS SLOPE SHALL BE AS DETAILED AND NOTED ON SHEETS SE-01 THROUGH SE-3. SEE GENERAL NOTE 17 ON SHEET GN-01.

RK&K
81 MOSHER STREET | BALTIMORE, MD 21217
PH: (410) 728-2900 FAX: (410) 728-3180
Engineers Construction Managers Planners Scientists
www.rkk.com

ALA
ATHAVALE, LYSTAD & ASSOCIATES INC.
Consulting Engineers Rockville, Maryland

MARYLAND TRANSPORTATION AUTHORITY
Engineering Division

ADDENDUMS & REVISIONS			
NO.	DESCRIPTION	BY	DATE

I-95 FROM MORAVIA ROAD TO THE FORT McHENRY TUNNEL - PHASE 1 - SOUTHBOUND
I-95 (BALTIMORE CITY)
BRIDGE NO. BCW 598-2 - I-95 S.B. OVER RAMP "B" & CSX R.R.
GENERAL PLAN AND ELEVATION

DESIGNED BY K.A.	DRAWN BY J.E.	CHECKED BY D.W.
CONST. REVIEW BY	DATE DECEMBER 2009	SCALE AS SHOWN

CONTRACT NO. FT 928-000-006
DRAWING NO. S-30
SHEET NO. 112 OF 188

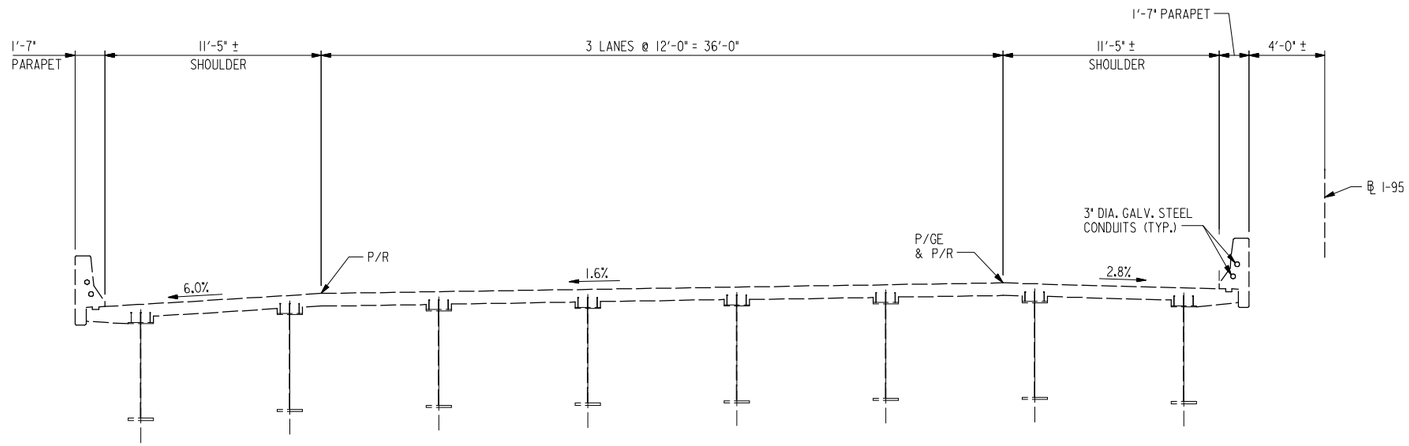

EXISTING SECTION

SCALE: 1/4" = 1'-0"

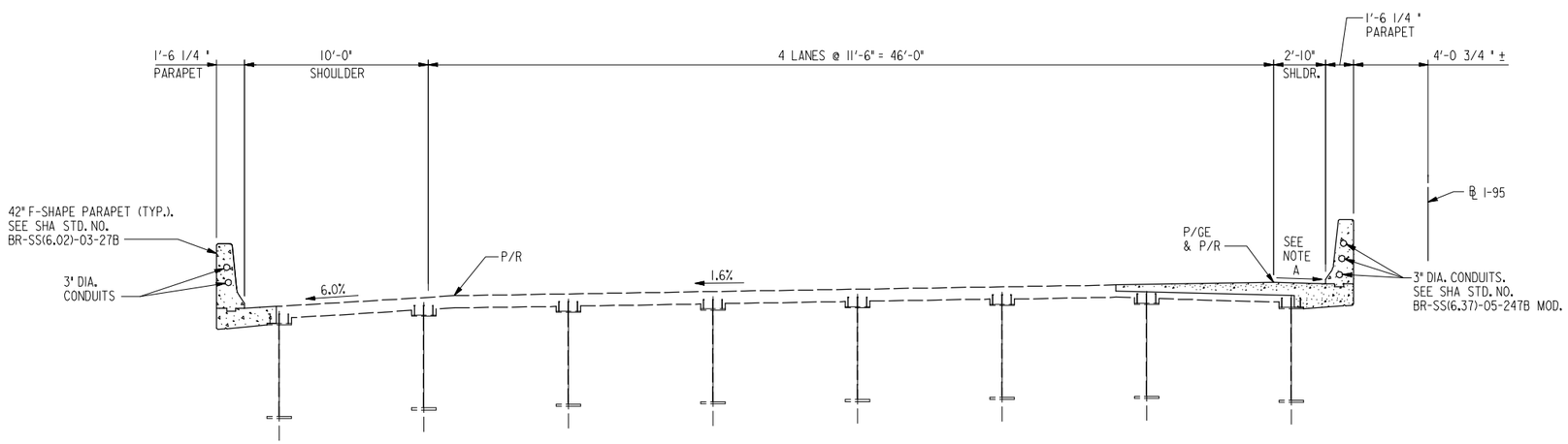

PROPOSED SECTION

SCALE: 1/4" = 1'-0"

NOTE A:

FOR CROSS SLOPE INFORMATION, SEE ROADWAY PLANS DWG. NOS. SE-01 THRU SE-03.

RK&K
81 MOSHER STREET | BALTIMORE, MD 21217
PH: (410) 728-2900 FAX: (410) 728-3180
Engineers Construction Managers Planners Scientists
www.rkk.com

ALA
ATHAVALE, LYSTAD & ASSOCIATES INC.
Consulting Engineers Rockville, Maryland

MARYLAND TRANSPORTATION AUTHORITY
Engineering Division

ADDENDUMS & REVISIONS

NO.	DESCRIPTION	BY	DATE

I-95 FROM MORAVIA ROAD TO THE FORT McHENRY TUNNEL - PHASE 1 - SOUTHBOUND

I-95 (BALTIMORE CITY)
BRIDGE NO. BCW 598-2 - I-95 S.B. OVER RAMP "B" & CSX R.R.
EXISTING AND PROPOSED SECTION

DESIGNED BY K.A.	DRAWN BY J.E.	CHECKED BY D.W.
CONST. REVIEW BY	DATE DECEMBER 2009	SCALE AS SHOWN

CONTRACT NO. FT 928-000-006
DRAWING NO. **S-31**
SHEET NO. 113 OF 188

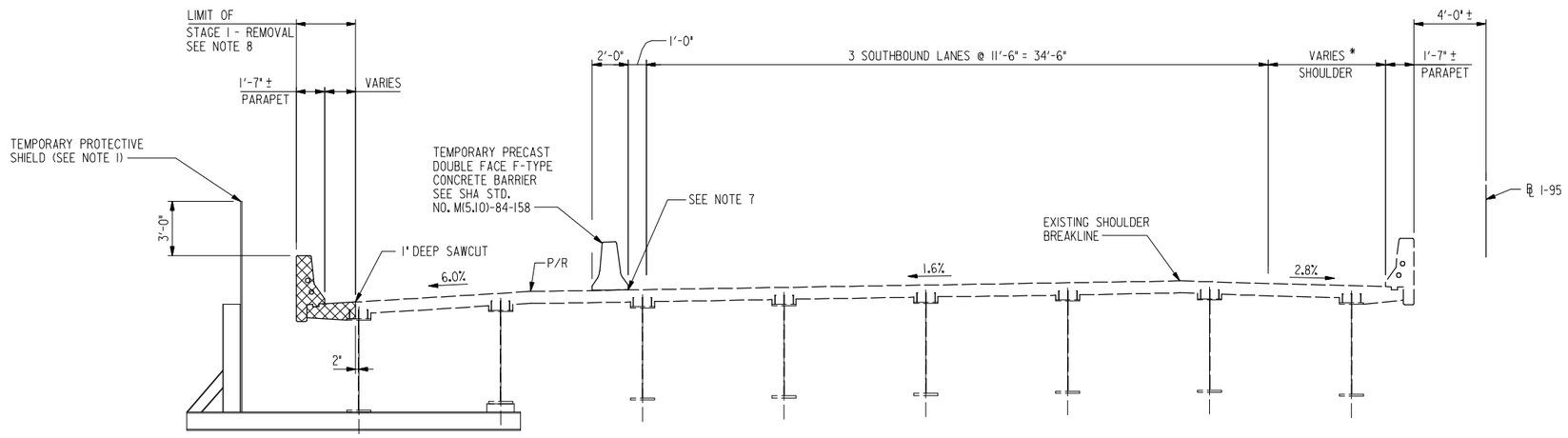

STAGE I – REMOVAL

SCALE: 1/4" = 1'-0"

(SPANS 2 & 3)

* NOTE:

SEE TRAFFIC CONTROL PLANS FOR ADDITIONAL INFORMATION.

NOTES:

1. CONTRACTOR SHALL PROVIDE TEMPORARY PROTECTIVE SHIELD AT THE LOCATION SHOWN FOR THE DURATION OF CONSTRUCTION. CONTRACTOR SHALL DESIGN AND DETAIL THE PROTECTIVE SHIELD AND SUBMIT SHOP DRAWINGS TO THE ENGINEER FOR APPROVAL. THE DESIGN LOAD SHALL BE 150 PSF. CONTRACTOR SHALL MAINTAIN 23'-0" MIN. VERTICAL CLEARANCE OVER THE EXISTING TRACKS ON SPAN 3, INCLUDING THE TEMPORARY PROTECTIVE SHIELD. COST FOR TEMPORARY PROTECTIVE SHIELD SHALL BE CONSIDERED INCIDENTAL TO THE UNIT COST FOR REMOVAL OF PORTION OF EXISTING STRUCTURES. THE DESIGN LOAD SHALL BE 150 PSF.
2. CONTRACTOR SHALL PROTECT EXISTING REINFORCEMENT THAT WILL BE INCORPORATED INTO THE NEW STRUCTURE. WORK SHALL CONFORM TO SECTION 421.03.07 OF SHA SPECIFICATIONS.
3. EXISTING DECK REMOVAL SHALL CONFORM TO SECTION 405.03.02 OF THE SPECIFICATIONS.
4. BEFORE REMOVAL OPERATIONS BEGIN, CONTRACTOR SHALL LOCATE THE EDGE OF THE TOP FLANGES OR COVER PLATES OF THE EXTERIOR BEAM AS SPECIFIED IN SECTION 405. UNDER NO CIRCUMSTANCES SHALL SAWCUTS DEEPER THAN 1" BE PERMITTED WITHIN 6" FROM THE EDGE OF THE TOP FLANGE OR COVER PLATES OR 1'-4" FROM CENTERLINE OF EXTERIOR BEAM, WHICHEVER IS LARGER. SAWCUTTING SHALL ONLY BE ALLOWED AS SPECIFIED IN THESE PLANS. FOR REMOVAL DETAILS AND ADDITIONAL REMOVAL NOTES, SEE DWG NO. S-33.
5. FOR DETAIL 1, SEE DWG NO. S-34.
6. CONTRACTOR SHALL COORDINATE THE REMOVAL AND CONSTRUCTION WORK WITH THE TRAFFIC CONTROL PLANS.
7. CONTRACTOR SHALL SEAL BOTTOM OF TEMPORARY BARRIER DURING THE STAGE I WORK TO PREVENT DRAINAGE RUN OFF FROM THE BRIDGE DECK WITHIN THE LIMITS OF THE RAILROAD RIGHT OF WAY.
8. CONTRACTOR SHALL REMOVE EXISTING DECK CONCRETE IN THIS AREA USING HAND TOOLS OR POWER DRIVEN HAND TOOLS.

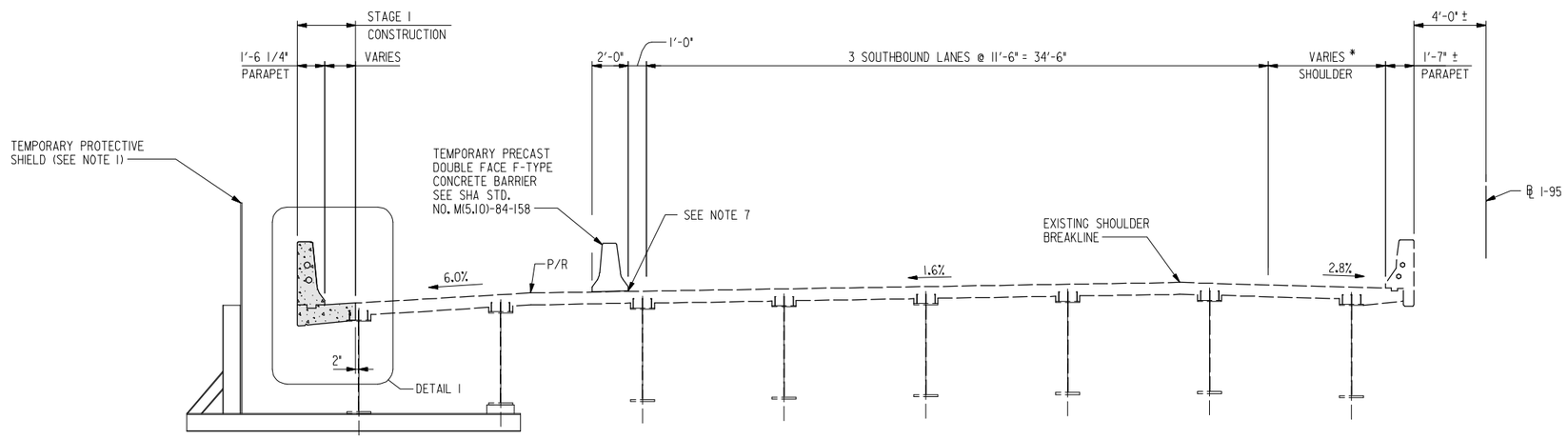

STAGE I – CONSTRUCTION

SCALE: 1/4" = 1'-0"

(SPANS 2 & 3)

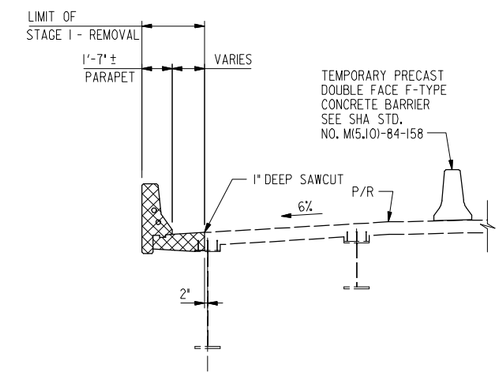

STAGE I – REMOVAL

SCALE: 1/4" = 1'-0"

(SPANS 1 & 4)

TEMPORARY PROTECTIVE SHIELD IS NOT SHOWN. SEE NOTE 1

LEGEND:

INDICATES PORTION OF EXISTING STRUCTURE TO BE REMOVED

INDICATES NEW CONSTRUCTION

RK&K
81 MOSHER STREET | BALTIMORE, MD 21217
PH: (410) 728-2900 FAX: (410) 728-3160
Engineers Construction Managers Planners Scientists
www.rkk.com

ALA
ATHAVALE, LYSTAD & ASSOCIATES INC.
Consulting Engineers Rockville, Maryland

MARYLAND TRANSPORTATION AUTHORITY
Engineering Division

ADDENDUMS & REVISIONS

NO.	DESCRIPTION	BY	DATE

I-95 FROM MORAVIA ROAD TO THE FORT McHENRY TUNNEL - PHASE 1 - SOUTHBOUND

I-95 (BALTIMORE CITY)
BRIDGE NO. BCW 598-2 - I-95 S.B. OVER RAMP "B" & CSX R.R.
SEQUENCE OF CONSTRUCTION - I

DESIGNED BY K.A.	DRAWN BY J.E.	CHECKED BY D.W.
CONST. REVIEW BY	DATE DECEMBER 2009	SCALE AS SHOWN

CONTRACT NO. FT 928-000-006

DRAWING NO. S-32

SHEET NO. 114 OF 188

NOTES:

1. FOR DETAIL 2, SEE DWG NO. S-34.
2. FOR ADDITIONAL NOTES, SEE DWG NO. S-32.
3. CONTRACTOR SHALL REMOVE EXISTING DECK CONCRETE IN THIS AREA USING HAND TOOLS OR POWER DRIVEN HAND TOOLS.
4. CONTRACTOR SHALL REMOVE DECK SLAB TO A DEPTH OF 1" BELOW THE TOP DECK REINFORCING STEEL MAT. SEE SPECIAL PROVISIONS FOR DECK SURFACE REMOVAL METHODS.

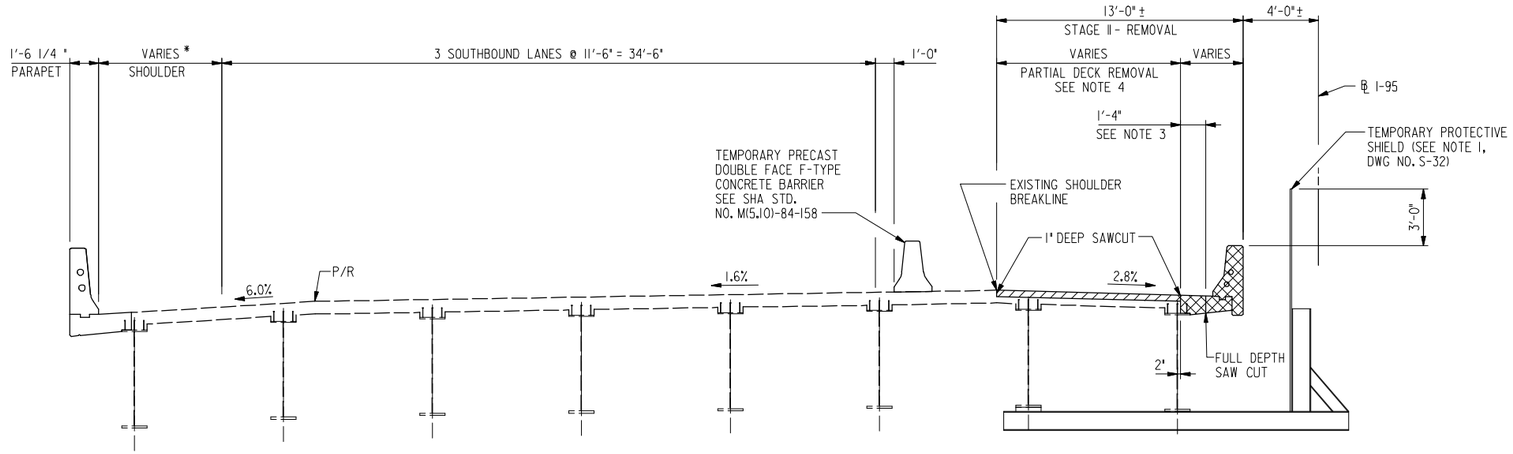

NOTE (*):
SEE TRAFFIC CONTROL PLANS FOR ADDITIONAL INFORMATION.

STAGE II – REMOVAL

SCALE: 1/4" = 1'-0"

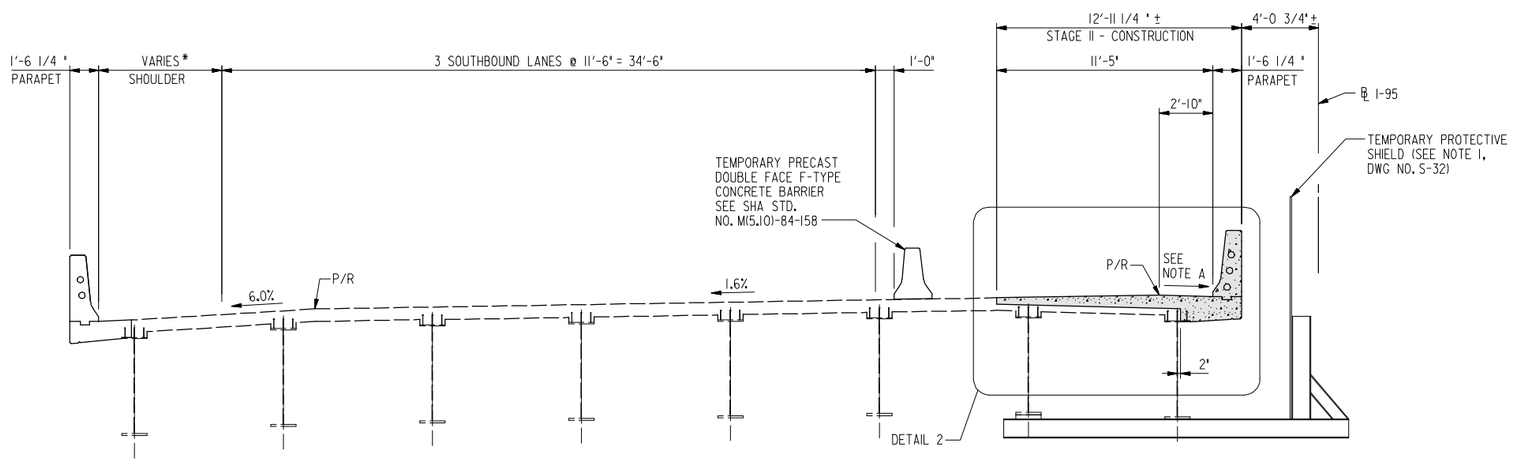

NOTE A:
FOR CROSS SLOPE INFORMATION, SEE ROADWAY PLANS DWG. NOS. SE-01 THRU SE-03.

STAGE II – CONSTRUCTION

SCALE: 1/4" = 1'-0"

LEGEND:

- INDICATES PORTION OF EXISTING DECK TO BE PARTIALLY REMOVED
- INDICATES PORTION OF EXISTING STRUCTURE TO BE FULL-DEPTH REMOVED
- INDICATES NEW CONSTRUCTION

RK&K
81 MOSHER STREET | BALTIMORE, MD 21217
PH: (410) 728-2900 FAX: (410) 728-3160
Engineers Construction Managers Planners Scientists
www.rkk.com

ALA
ATHAVALE, LYSTAD & ASSOCIATES INC.
Consulting Engineers Rockville, Maryland

MARYLAND TRANSPORTATION AUTHORITY
Engineering Division

ADDENDUMS & REVISIONS

NO.	DESCRIPTION	BY	DATE

I-95 FROM MORAVIA ROAD TO THE FORT McHENRY TUNNEL - PHASE 1 - SOUTHBOUND

I-95 (BALTIMORE CITY)
BRIDGE NO. BCW 598-2 - I-95 S.B. OVER RAMP "B" & CSX R.R.
SEQUENCE OF CONSTRUCTION - 2

CONTRACT NO. FT 928-000-006
DRAWING NO. S-33

DESIGNED BY K.A. | DRAWN BY J.E. | CHECKED BY D.W.
CONST. REVIEW BY | DATE DECEMBER 2009 | SCALE AS SHOWN

FILE: r:\49562\dgn\SB\proj\598_S-33_Sequence of Construction - 2.dgn
DATE: Friday, December 04, 2009 AT 02:56 PM
r:\49562\dgn\SB\proj\598_S-33_Sequence of Construction - 2.dgn
Friday, December 04, 2009 AT 02:56 PM

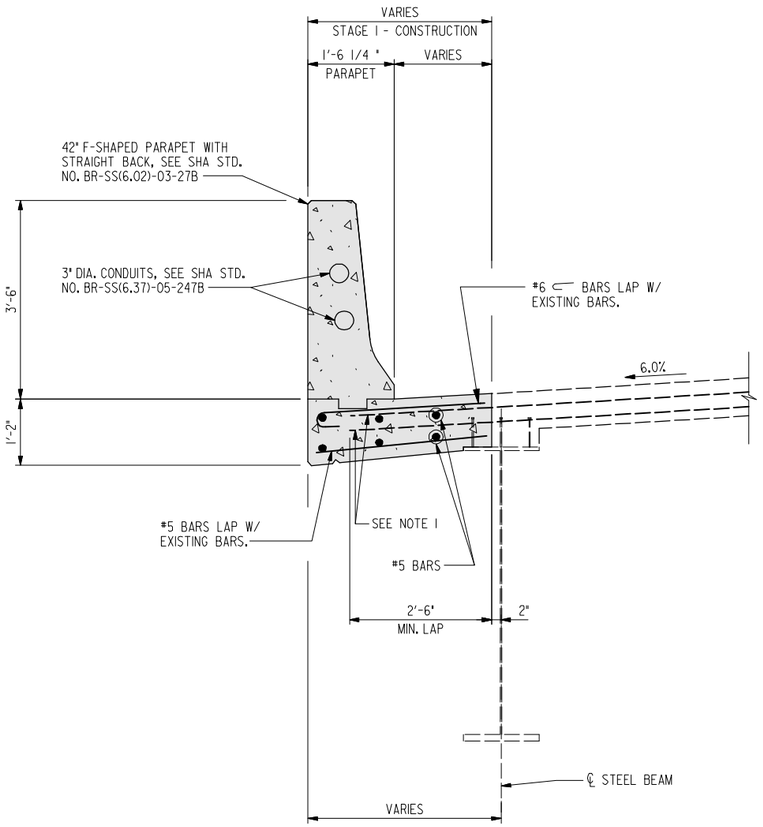

DETAIL 1

SCALE: 3/4" = 1'-0"

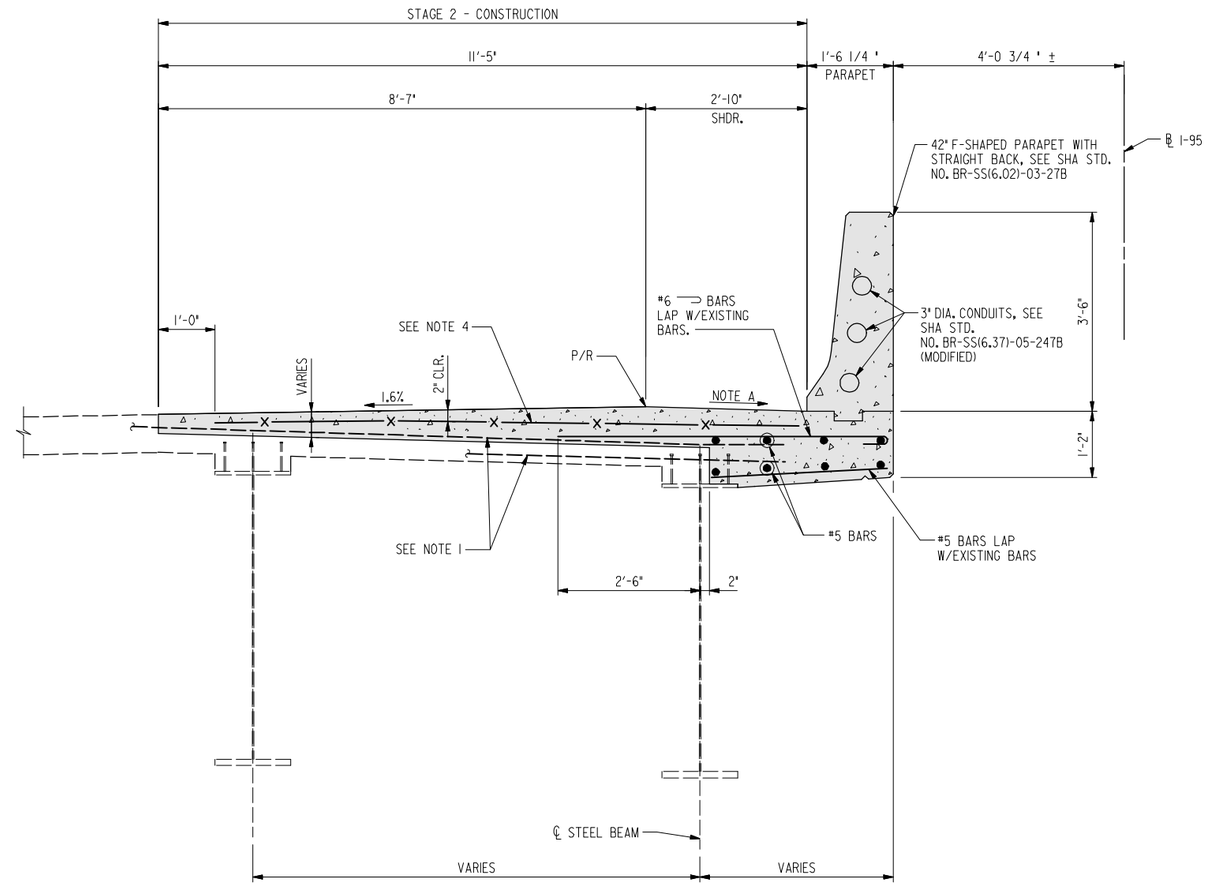

DETAIL 2

SCALE: 3/4" = 1'-0"

NOTE A:

FOR CROSS SLOPE INFORMATION, SEE ROADWAY PLANS DWG. NOS. SE-01 THRU SE-03.

NOTES:

1. CONTRACTOR SHALL MAINTAIN THE EXISTING DECK REINFORCING THAT WILL BE INCORPORATED INTO THE NEW CONSTRUCTION. ANY DAMAGE OR LOSS IN THESE BARS SHALL BE CORRECTED AS SPECIFIED IN SECTION 421.03.07 OF THE SPECIFICATIONS.
2. ALL EXPOSED EXISTING REINFORCING STEEL TO REMAIN SHALL BE THOROUGHLY CLEANED AND FIELD EPOXY COATED.
3. ALL REINFORCING STEEL BARS IN DECK SLAB, INCLUDING WELDED WIRE FABRIC (WWF), SHALL BE EPOXY COATED.
4. CONTRACTOR MAY USE WELDED WIRE FABRIC (WWF) 6x6-W7.0xW7.0 OR #4 BARS @ 4" C/C IN BOTH DIRECTIONS.
5. FOR CONCRETE SPECIFICATIONS, SEE GENERAL NOTES.

LEGEND:

INDICATES NEW CONSTRUCTION

RK&K
81 MOSHER STREET | BALTIMORE, MD 21217
PH: (410) 728-2900 FAX: (410) 728-3180
Engineers Construction Managers Planners Scientists
www.rkk.com

ALA
ATHAVALE, LYSTAD & ASSOCIATES INC.
Consulting Engineers Rockville, Maryland

MARYLAND TRANSPORTATION AUTHORITY
Engineering Division

ADDENDUMS & REVISIONS			
NO.	DESCRIPTION	BY	DATE

I-95 FROM MORAVIA ROAD TO THE FORT McHENRY TUNNEL - PHASE 1 - SOUTHBOUND
I-95 (BALTIMORE CITY)
BRIDGE NO. BCW 598-2 - I-95 S.B. OVER RAMP "B" & CSX R.R.
DECK REINFORCING DETAILS

DESIGNED BY K.A. | DRAWN BY J.E. | CHECKED BY D.W.
CONST. REVIEW BY | DATE DECEMBER 2009 | SCALE AS SHOWN

CONTRACT NO. FT 928-000-006
DRAWING NO. S-34
SHEET NO. 116 OF 188

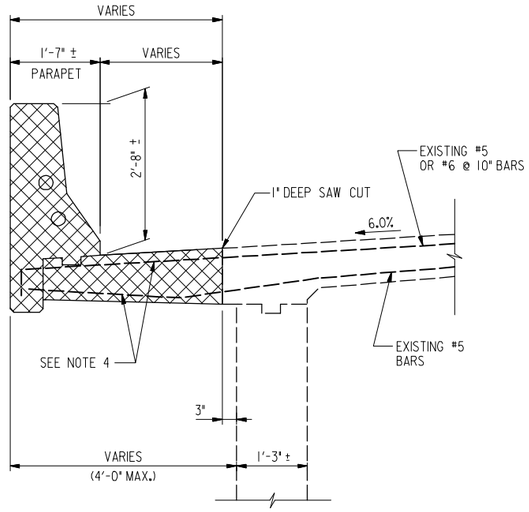

STAGE 1 – REMOVAL

SCALE: 3/4" = 1'-0"
AT APPROACH SPANS

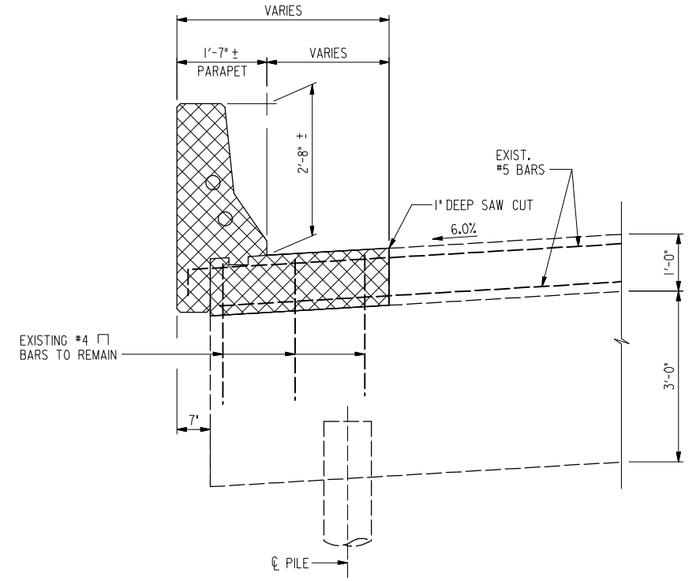

STAGE 1 – REMOVAL

SCALE: 3/4" = 1'-0"
AT APPROACH SPAN END

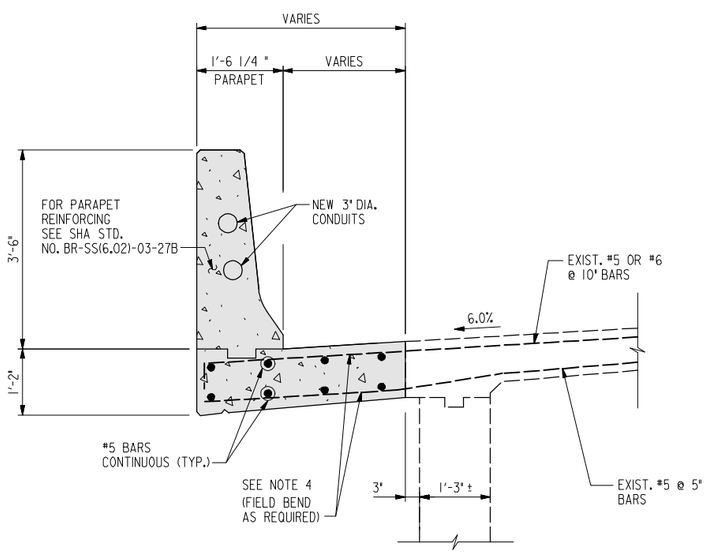

STAGE 1 – CONSTRUCTION

SCALE: 3/4" = 1'-0"
AT APPROACH SPANS

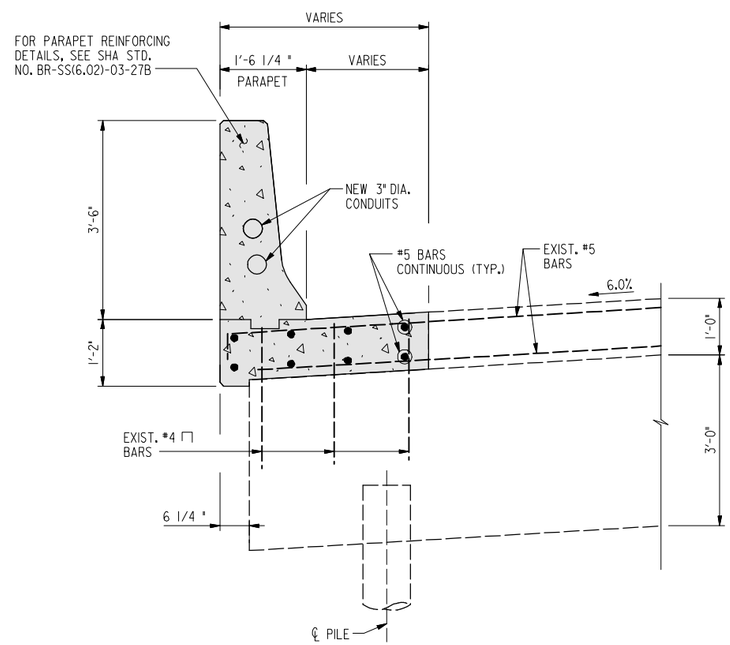

STAGE 1 – CONSTRUCTION

SCALE: 3/4" = 1'-0"
AT APPROACH SPAN END

NOTES:

1. FOR REINFORCING DETAILS OF NEW PARAPET, SEE SHA STD. NO.BR-SS(6.02)03-27B.
2. FOR CONCRETE SPECIFICATIONS, SEE GENERAL NOTES.
3. ALL REINFORCING STEEL SHALL EPOXY COATED.
4. CONTRACTOR SHALL MAINTAIN EXISTING REINFORCING BARS TO BE INCORPORATED INTO NEW CONSTRUCTION. CARE SHALL BE TAKEN DURING THE REMOVAL WORK NOT TO DAMAGE THE EXISTING REINFORCING BARS. ANY DAMAGE TO THESE BARS SHALL BE CORRECTED AS SPECIFIED IN SECTION 421.03.07 OF THE SPECIFICATIONS.
5. ALL EXISTING REINFORCING STEEL TO REMAIN SHALL BE THOROUGHLY CLEANED AND FIELD EPOXY COATED.
6. FOR CONDUIT DETAILS, SEE SHA. STD. BR-SS(6.37)-05-247B.

LEGEND:

INDICATES PORTION OF EXISTING STRUCTURE TO BE REMOVED

INDICATES NEW CONSTRUCTION

RK&K
81 MOSHER STREET | BALTIMORE, MD 21217
PH: (410) 728-2900 FAX: (410) 728-3180
Engineers Construction Managers Planners Scientists
www.rkk.com

ALA
ATHAVALE, LYSTAD & ASSOCIATES INC.
Consulting Engineers Rockville, Maryland

MARYLAND TRANSPORTATION AUTHORITY
Engineering Division

ADDENDUMS & REVISIONS

NO.	DESCRIPTION	BY	DATE

I-95 FROM MORAVIA ROAD TO THE FORT McHENRY TUNNEL - PHASE 1 - SOUTHBOUND

I-95 (BALTIMORE CITY)
BRIDGE NO. BCW 598-2 - I-95 S.B. OVER RAMP "B" & CSX R.R.
APPROACH SPAN DETAILS - 1

DESIGNED BY K.A.	DRAWN BY J.E.	CHECKED BY D.W.	
CONST. REVIEW BY	DATE DECEMBER 2009	SCALE AS SHOWN	

CONTRACT NO. FT 928-000-006
DRAWING NO. S-35
SHEET NO. 117 OF 188

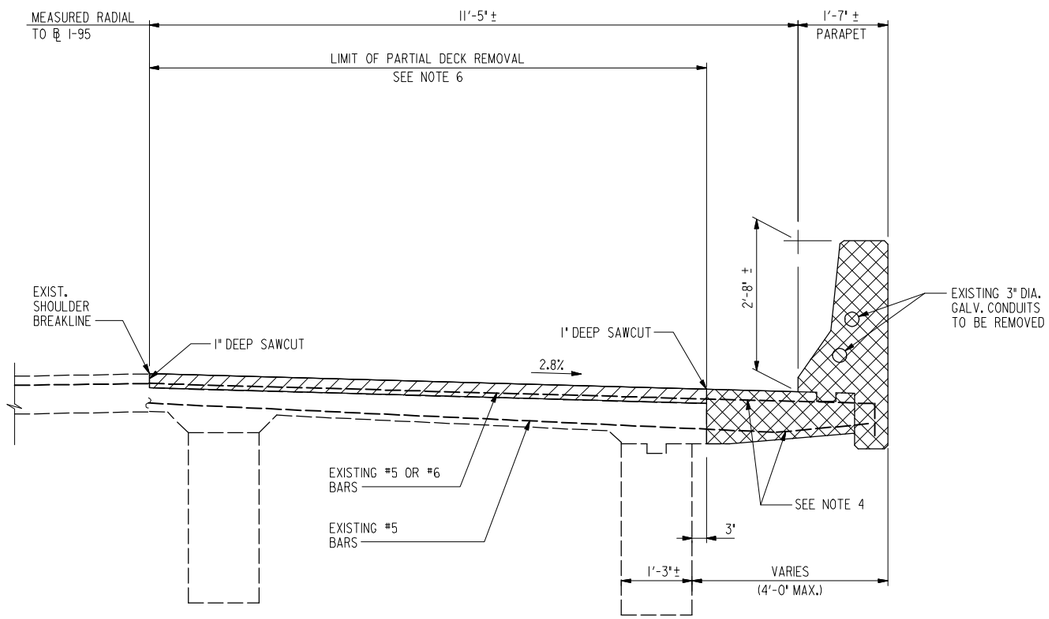

STAGE II – REMOVAL

SCALE: 3/4" = 1'-0"

AT MEDIAN - APPROACH SPANS

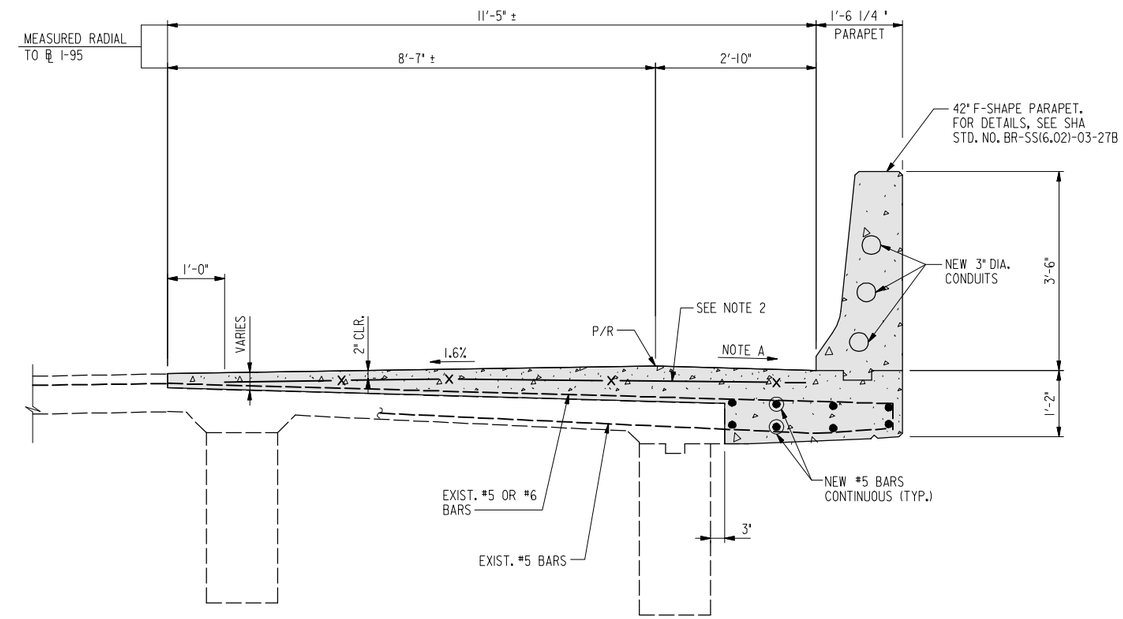

NOTE A:

FOR CROSS SLOPE INFORMATION, SEE ROADWAY PLANS DWG. NOS. SE-01 THRU SE-03.

STAGE II – CONSTRUCTION

SCALE: 3/4" = 1'-0"

AT MEDIAN - APPROACH SPANS

NOTES:

1. ALL REINFORCING STEEL BARS INCLUDING WELDED WIRE FABRIC (WWF) SHALL BE EPOXY COATED.
2. CONTRACTOR MAY USE WWF 6x6-W7.0xW7.0 OR #4 BARS @ 6" C/C IN BOTH DIRECTIONS.
3. FOR CONDUIT DETAILS, SEE SHA STD. NO. BR-SS(6.37)-05-207B (MODIFIED).
4. CONTRACTOR SHALL MAINTAIN EXISTING REINFORCING BARS TO BE INCORPORATED INTO NEW CONSTRUCTION. CARE SHALL BE TAKEN DURING THE REMOVAL WORK NOT TO DAMAGE THE EXISTING REINFORCING BARS. ANY DAMAGE TO THESE BARS SHALL BE CORRECTED AS SPECIFIED IN SECTION 421.03.07 OF THE SPECIFICATIONS.
5. ALL EXISTING REINFORCING STEEL TO REMAIN SHALL BE THOROUGHLY CLEANED AND FIELD EPOXY COATED.
6. CONTRACTOR SHALL REMOVE EXISTING DECK CONCRETE WITHIN LIMITS SHOWN TO A DEPTH OF 1" BELOW THE TOP REINFORCING STEEL MAT. SEE SPECIAL PROVISIONS FOR REQUIREMENTS.
7. FOR CONCRETE SPECIFICATIONS, SEE GENERAL NOTES.

LEGEND:

- INDICATES PORTION OF EXISTING DECK TO BE PARTIALLY REMOVED
- INDICATES PORTION OF EXISTING STRUCTURE TO BE REMOVED
- INDICATES NEW CONSTRUCTION

RK&K
81 MOSHER STREET | BALTIMORE, MD 21217
PH: (410) 728-2900 FAX: (410) 728-3180
Engineers Construction Managers Planners Scientists
www.rkk.com

ALA
ATHAVALE, LYSTAD & ASSOCIATES INC.
Consulting Engineers Rockville, Maryland

MARYLAND TRANSPORTATION AUTHORITY
Engineering Division

ADDENDUMS & REVISIONS

NO.	DESCRIPTION	BY	DATE

I-95 FROM MORAVIA ROAD TO THE FORT McHENRY TUNNEL - PHASE 1 - SOUTHBOUND

I-95 (BALTIMORE CITY)
BRIDGE NO. BCW 598-2 - I-95 S.B. OVER RAMP "B" & CSX R.R.
APPROACH SPAN DETAILS - 2

DESIGNED BY K.A.	DRAWN BY J.E.	CHECKED BY D.W.	
CONST. REVIEW BY	DATE DECEMBER 2009	SCALE AS SHOWN	

CONTRACT NO. FT 928-000-006

DRAWING NO. S-36

SHEET NO. 118 OF 188

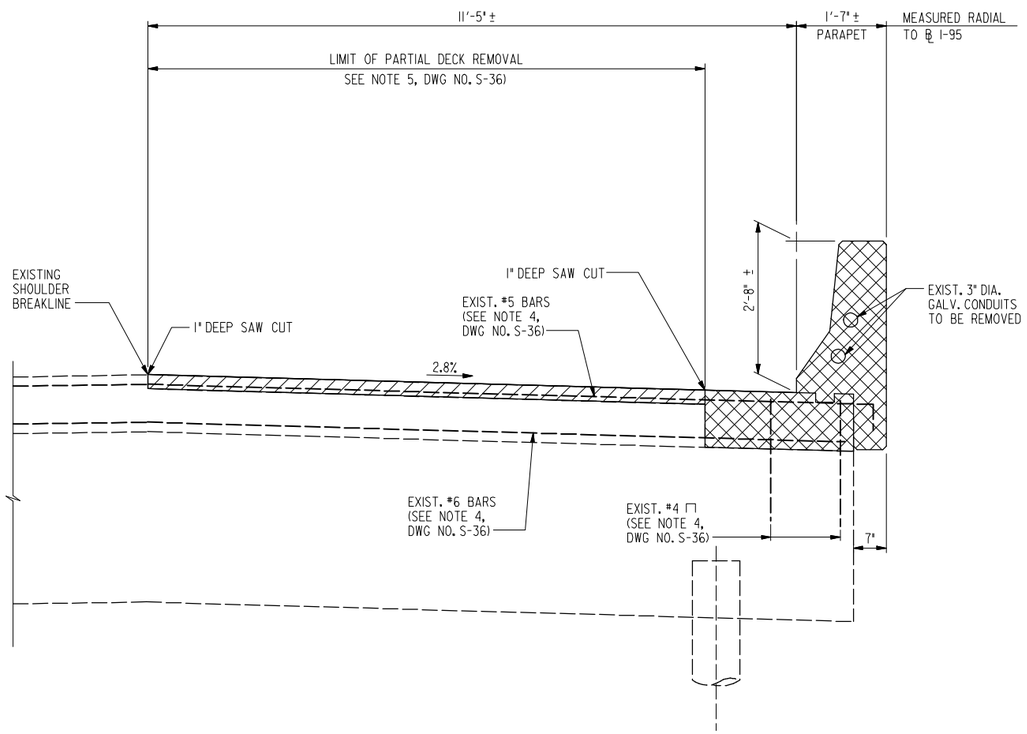

STAGE II – REMOVAL

SCALE: 3/4" = 1'-0"

AT APPROACH SPAN END

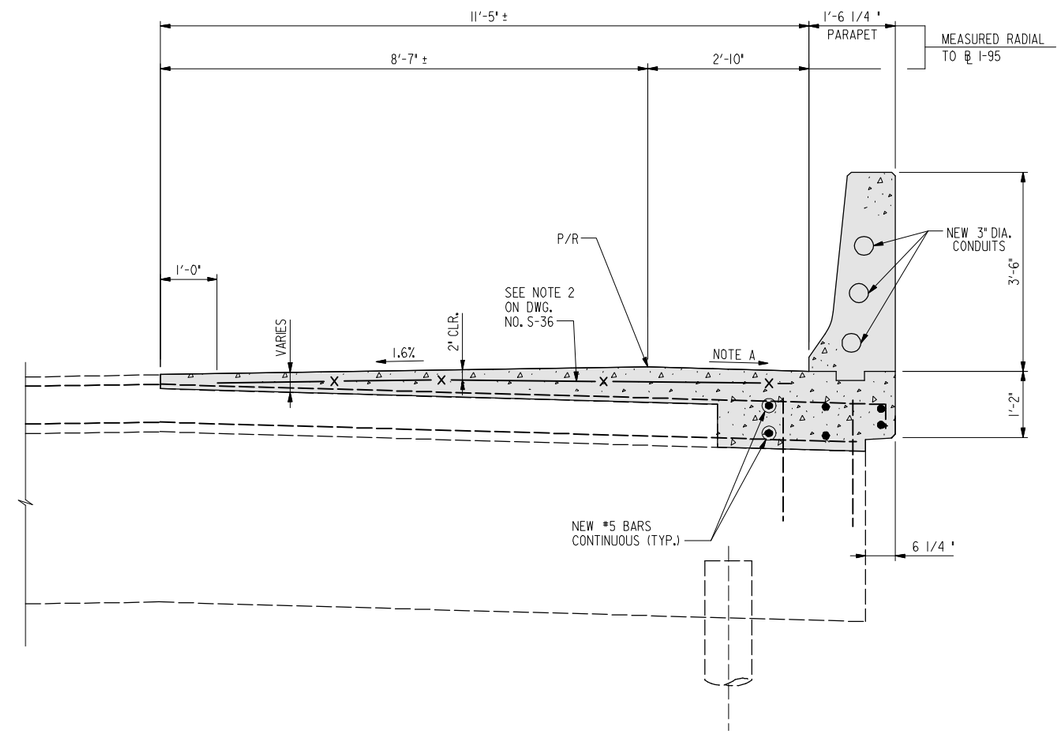

STAGE II – CONSTRUCTION

SCALE: 3/4" = 1'-0"

AT APPROACH SPAN END

NOTE A:

FOR CROSS SLOPE INFORMATION, SEE ROADWAY PLANS DWG. NOS. SE-01 THRU SE-03.

NOTE:

FOR NOTES, SEE DWG NO. S-36

LEGEND:

INDICATES PORTION OF EXISTING DECK TO BE PARTIALLY REMOVED

INDICATES PORTION OF EXISTING STRUCTURE TO BE REMOVED

INDICATES NEW CONSTRUCTION

RK&K
81 MOSHER STREET | BALTIMORE, MD 21217
PH: (410) 728-2900 FAX: (410) 728-3180
Engineers Construction Managers Planners Scientists
www.rkk.com

ALA
ATHAVALE, LYSTAD & ASSOCIATES INC.
Consulting Engineers Rockville, Maryland

MARYLAND TRANSPORTATION AUTHORITY
Engineering Division

ADDENDUMS & REVISIONS

NO.	DESCRIPTION	BY	DATE

I-95 FROM MORAVIA ROAD TO THE FORT McHENRY TUNNEL - PHASE 1 - SOUTHBOUND
I-95 (BALTIMORE CITY)
BRIDGE NO. BCW 598-2 - I-95 S.B. OVER RAMP "B" & CSX R.R.
APPROACH SPAN DETAILS - 3

DESIGNED BY K.A.	DRAWN BY J.E.	CHECKED BY D.W.	SHEET NO. 119 OF 188
CONST. REVIEW BY	DATE DECEMBER 2009	SCALE AS SHOWN	

CONTRACT NO. FT 928-000-006

DRAWING NO. S-37

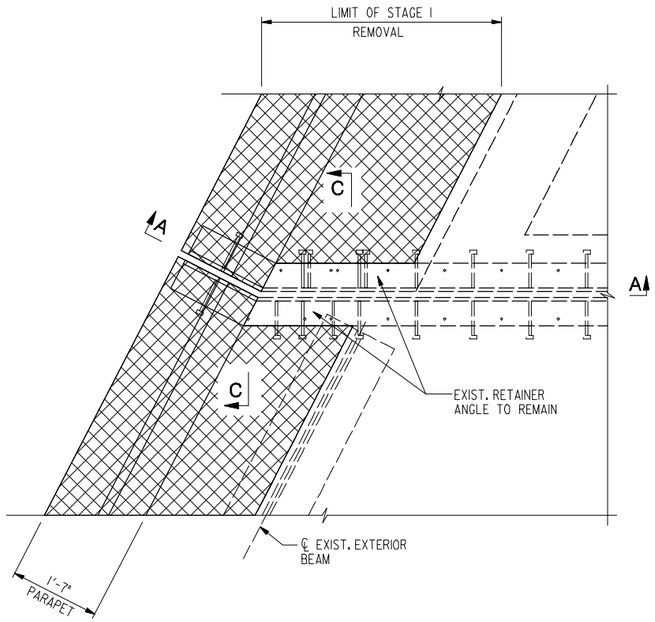

STAGE I – REMOVAL AT ROADWAY JOINTS

SCALE: 3/4" = 1'-0"

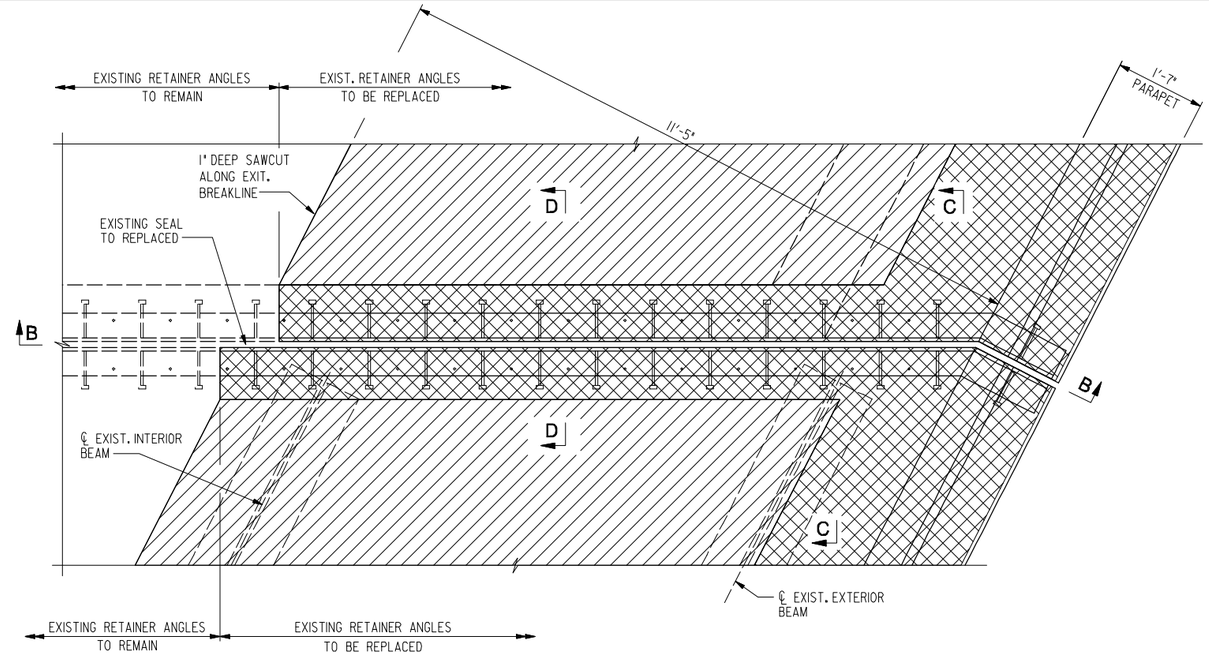

STAGE II – REMOVAL AT ROADWAY JOINTS

SCALE: 3/4" = 1'-0"

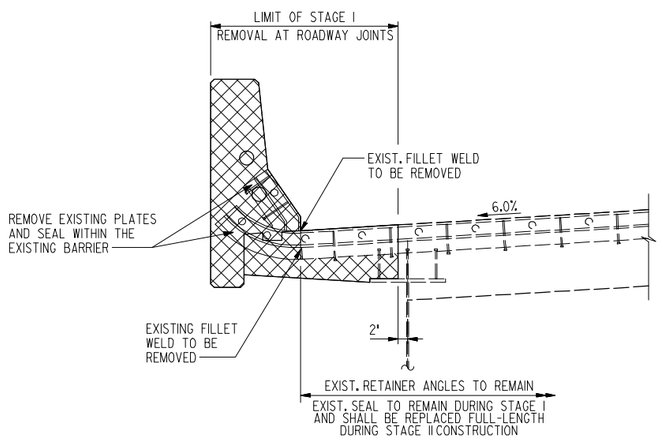

SECTION A–A

SCALE: 3/4" = 1'-0"

NOTES:

1. FOR SECTIONS C-C AND D-D, SEE DWG NO. S-40.
2. REMOVAL WORK AT ABUTMENT ROADWAY JOINT IS SHOWN. REMOVAL WORK AT PIER ROADWAY JOINTS IS SIMILAR. SEE SECTIONS C-C AND D-D FOR LIMITS. FOR SECTION AT PIERS, SEE DWG NOS. S-40 AND S-41.
3. ALL DECK REMOVAL OVER THE EXISTING BEAMS SHALL BE DONE USING HAND TOOLS OR POWER DRIVEN HAND TOOLS ONLY.
4. FOR ADDITIONAL REMOVAL INFORMATION BEYOND THE JOINTS, SEE DWG NOS. S-32 THRU S-34.
5. CONTRACTOR SHALL REPLACE THE EXISTING COMPRESSION SEALS (FULL-LENGTH) FOR THE ENTIRE SOUTHBOUND BRIDGE DECK WIDTH. SEAL REPLACEMENT WILL BE MEASURED AND PAID FOR AT THE CONTRACT UNIT PRICE PER LINEAR FOOT FOR 'BRIDGE ROADWAY SEAL REPLACEMENT' PAY ITEM.

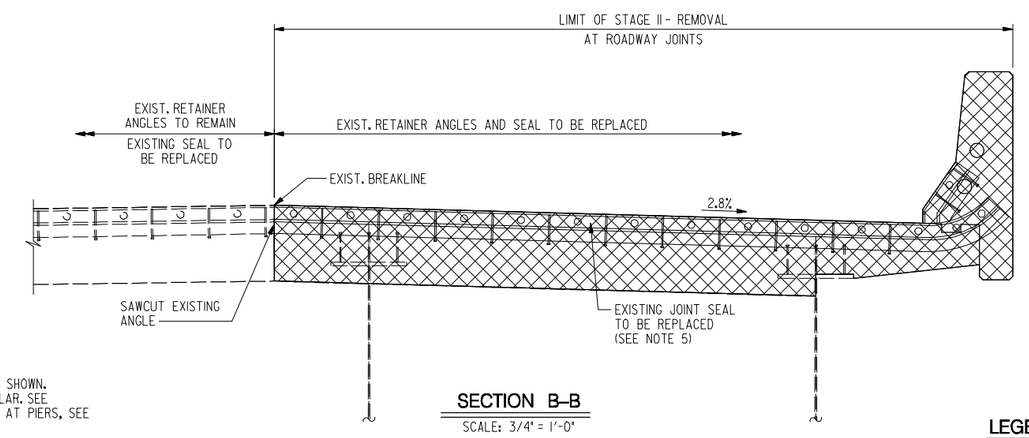

SECTION B–B

SCALE: 3/4" = 1'-0"

LEGEND:

INDICATES PORTION OF EXISTING STRUCTURE TO BE REMOVED

INDICATES PORTION OF EXISTING DECK TO BE PARTIALLY REMOVED

RK&K
81 MOSHER STREET | BALTIMORE, MD 21217
PH: (410) 728-2900 FAX: (410) 728-3180
Engineers Construction Managers Planners Scientists
www.rkk.com

ALA
ATHAVALE, LYSTAD & ASSOCIATES INC.
Consulting Engineers Rockville, Maryland

MARYLAND TRANSPORTATION AUTHORITY
Engineering Division

ADDENDUMS & REVISIONS

NO.	DESCRIPTION	BY	DATE

I-95 FROM MORAVIA ROAD TO THE FORT McHENRY TUNNEL - PHASE 1 - SOUTHBOUND

I-95 (BALTIMORE CITY)
BRIDGE NO. BCW 598-2 - I-95 S.B. OVER RAMP "B" & CSX R.R.
DECK JOINT DETAILS - I

DESIGNED BY K.A.	DRAWN BY J.E.	CHECKED BY D.W.	CONTRACT NO. FT 928-000-006
CONST. REVIEW BY	DATE DECEMBER 2009	SCALE AS SHOWN	DRAWING NO. S-38
			SHEET NO. 120 OF 188

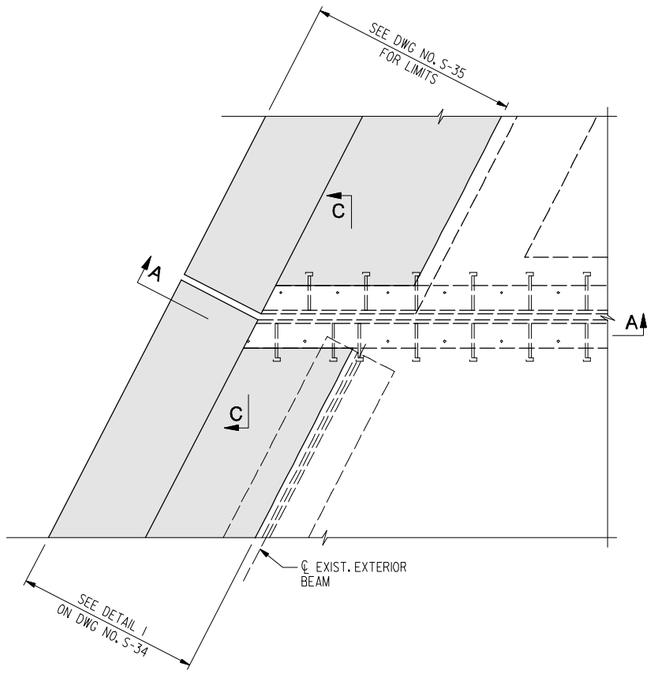

STAGE I – CONSTRUCTION AT ROADWAY JOINTS

SCALE: 3/4" = 1'-0"

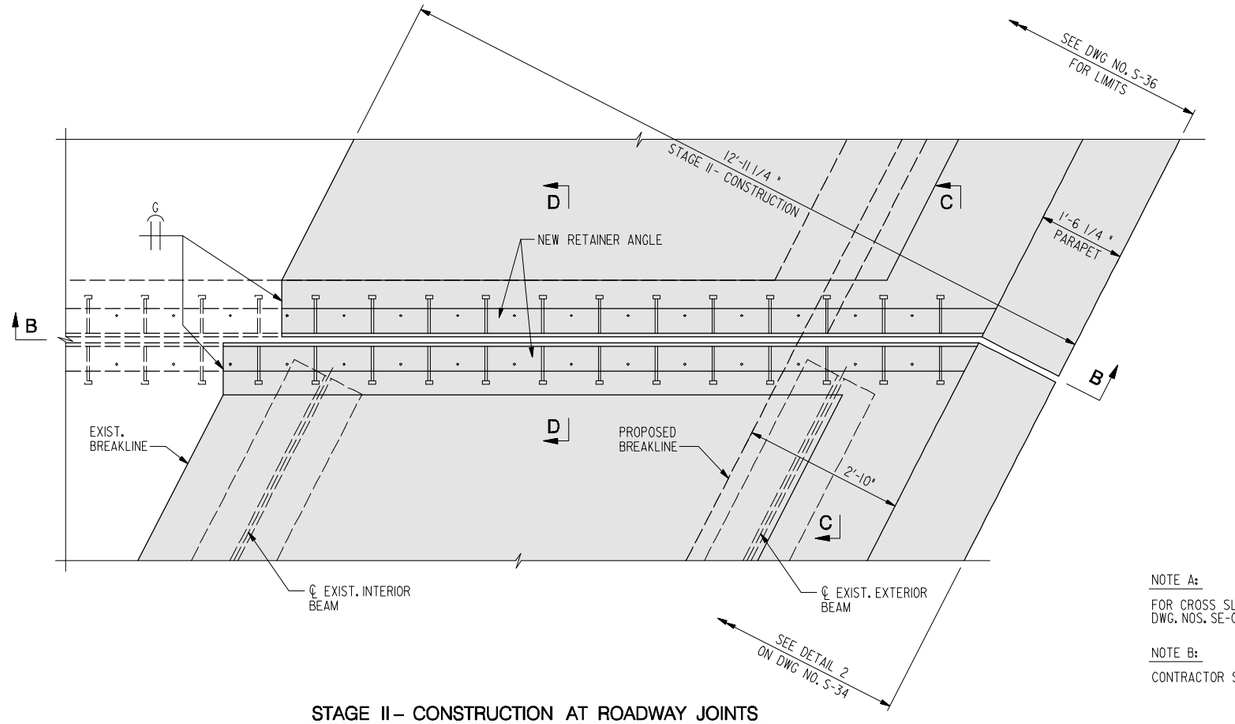

STAGE II – CONSTRUCTION AT ROADWAY JOINTS

SCALE: 3/4" = 1'-0"

NOTE A:

FOR CROSS SLOPE INFORMATION, SEE ROADWAY PLANS DWG. NOS. SE-01 THRU SE-03.

NOTE B:

CONTRACTOR SHALL MATCH EXISTING CROSS SLOPE.

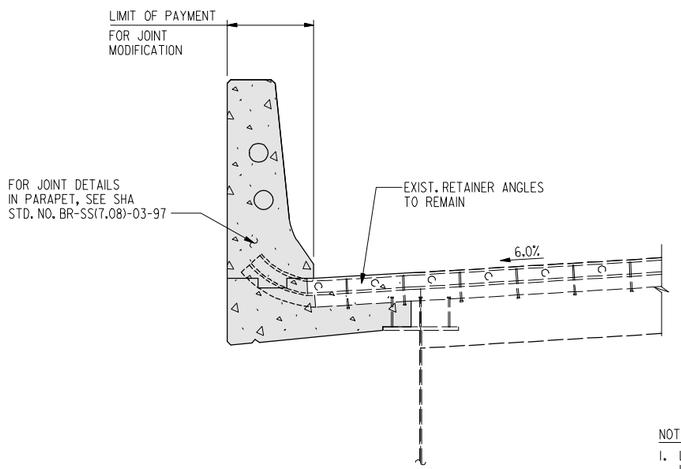

SECTION A–A

SCALE: 3/4" = 1'-0"

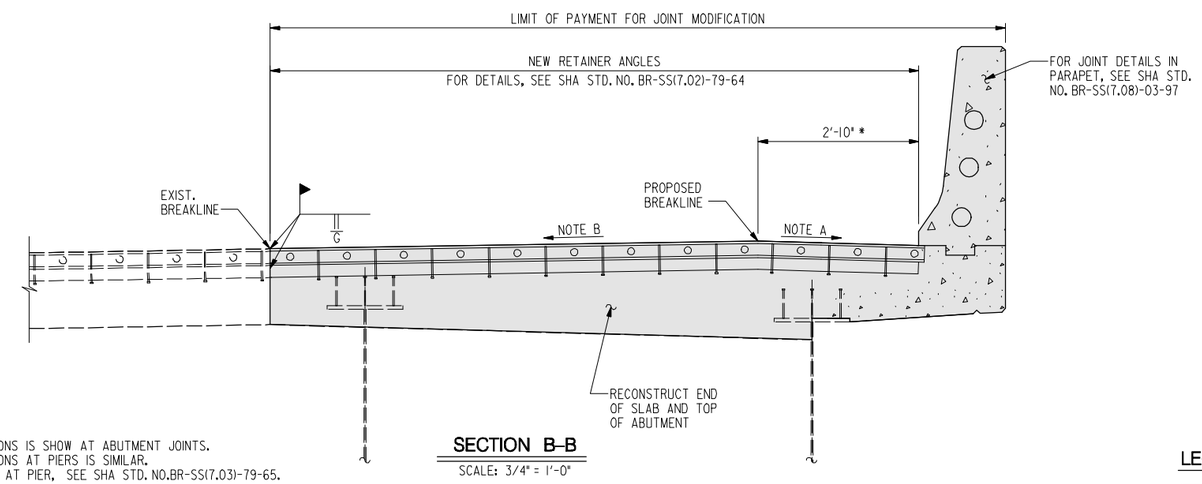

SECTION B–B

SCALE: 3/4" = 1'-0"

NOTES:

1. LIMIT OF WORK AND SECTIONS IS SHOW AT ABUTMENT JOINTS.
   LIMIT OF WORK AND SECTIONS AT PIERS IS SIMILAR.
   FOR NEW RETAINER ANGLE AT PIER, SEE SHA STD. NO.BR-SS(7.03)-79-65.
2. FOR LIMITS OF SEAL REPLACEMENT, SEE DWG. NO. S-38.

LEGEND:

INDICATES NEW CONSTRUCTION

RK&K
81 MOSHER STREET | BALTIMORE, MD 21217
PH: (410) 728-2900 FAX: (410) 728-3180
Engineers Construction Managers Planners Scientists
www.rkk.com

ALA
ATHAVALE, LYSTAD & ASSOCIATES INC.
Consulting Engineers Rockville, Maryland

MARYLAND TRANSPORTATION AUTHORITY
Engineering Division

ADDENDUMS & REVISIONS			
NO.	DESCRIPTION	BY	DATE

I-95 FROM MORAVIA ROAD TO THE FORT McHENRY TUNNEL - PHASE 1 - SOUTHBOUND

I-95 (BALTIMORE CITY)
BRIDGE NO. BCW 598-2 - I-95 S.B. OVER RAMP "B" & CSX R.R.
DECK JOINT DETAILS - 2

DESIGNED BY K.A.	DRAWN BY J.E.	CHECKED BY D.W.	
CONST. REVIEW BY	DATE DECEMBER 2009	SCALE AS SHOWN	

CONTRACT NO. FT 928-000-006
DRAWING NO. S–39
SHEET NO. 121 OF 188

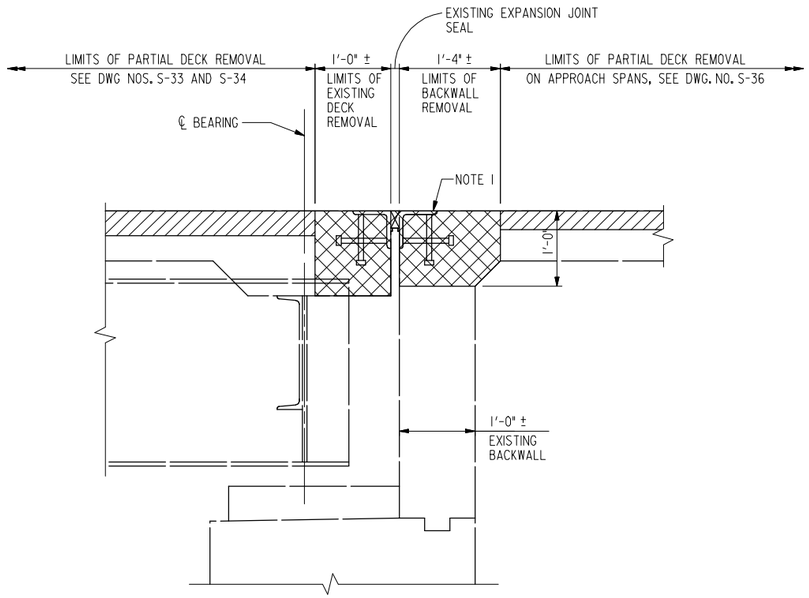

SECTION D–D

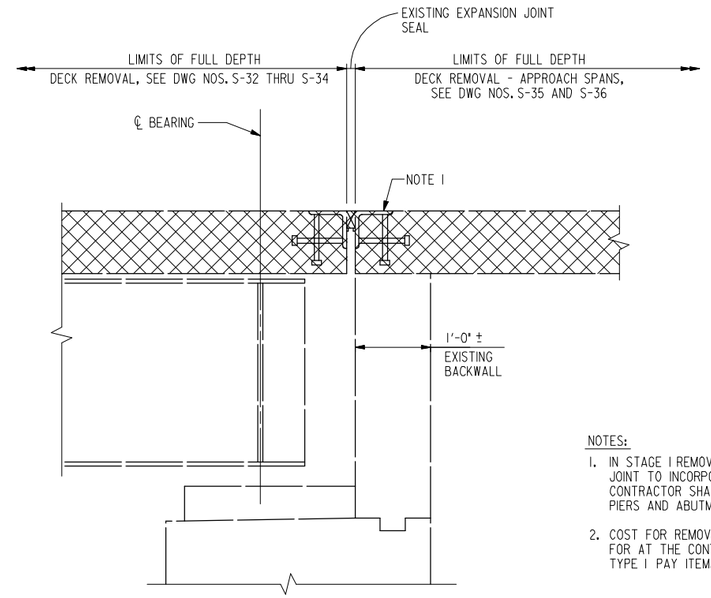

SECTION C–C

NOTES:

1. IN STAGE I REMOVAL, CONTRACTOR SHALL MAINTAIN EXISTING EXPANSION JOINT TO INCORPORATE IN NEW CONSTRUCTION. IN STAGE II REMOVAL, CONTRACTOR SHALL REMOVE THE EXISTING JOINT ASSEMBLY OVER PIERS AND ABUTMENTS.
2. COST FOR REMOVAL AND RE-CONSTRUCTION OF EXPANSION JOINT WILL BE PAID FOR AT THE CONTRACT UNIT PRICE PER LINEAR FOOT FOR THE JOINT MODIFICATION TYPE I PAY ITEM.

REMOVAL DETAILS AT ABUTMENTS – JOINT TYPE 1

SCALE: 1" = 1'-0"

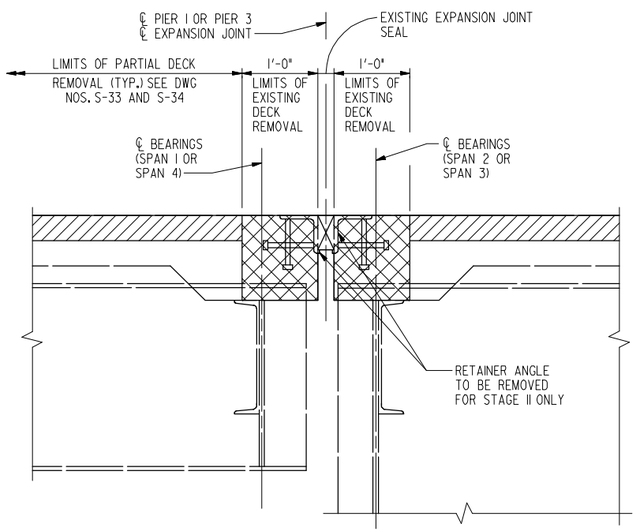

SECTION D–D

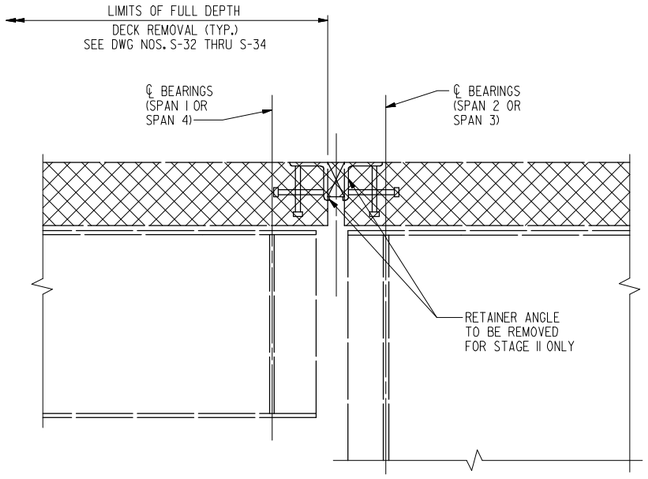

SECTION C–C

REMOVAL DETAILS AT PIERS – JOINT TYPE 1

SCALE: 1" = 1'-0"

LEGEND:

INDICATES PORTION OF EXISTING STRUCTURE TO BE REMOVED

INDICATES PORTION OF EXISTING DECK TO BE PARTIALLY REMOVED

RK&K
81 MOSHER STREET | BALTIMORE, MD 21217
PH: (410) 728-2900 FAX: (410) 728-3160
Engineers Construction Managers Planners Scientists
www.rkk.com

ALA
ATHAVALE, LYSTAD & ASSOCIATES INC.
Consulting Engineers Rockville, Maryland

MARYLAND TRANSPORTATION AUTHORITY
Engineering Division

ADDENDUMS & REVISIONS			
NO.	DESCRIPTION	BY	DATE

I-95 FROM MORAVIA ROAD TO THE FORT McHENRY TUNNEL - PHASE 1 - SOUTHBOUND
I-95 (BALTIMORE CITY)
BRIDGE NO. BCW 598-2 - I-95 S.B. OVER RAMP "B" & CSX R.R.
DECK JOINT DETAILS - 3

CONTRACT NO. FT 928-000-006
DRAWING NO. S-40

DESIGNED BY K.A. | DRAWN BY J.E. | CHECKED BY D.W.
CONST. REVIEW BY | DATE DECEMBER 2009 | SCALE AS SHOWN

FILE: r:\49562\dgn\SB\proj\598_S-40_Deck Joint Details - 3.dgn
DATE: Friday, December 04, 2009 AT 02:56 PM
r:\49562\dgn\SB\proj\598_S-40_Deck Joint Details - 3.dgn
Friday, December 04, 2009 AT 02:56 PM

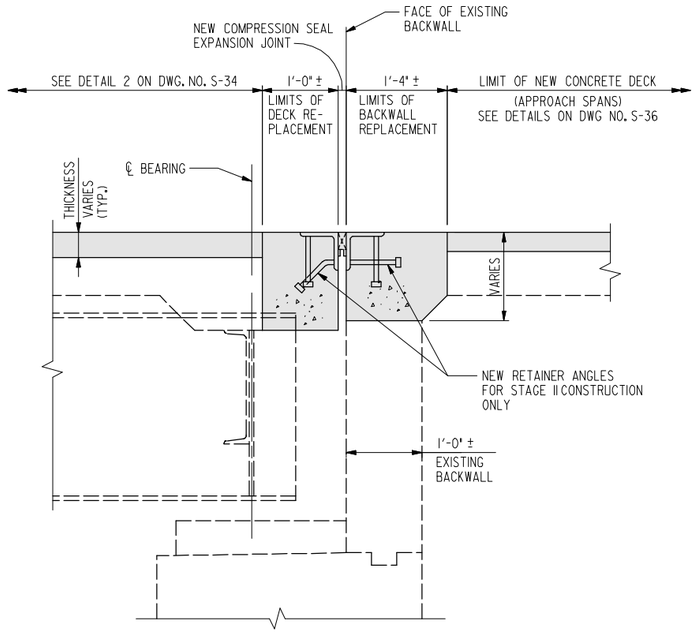

SECTION D–D

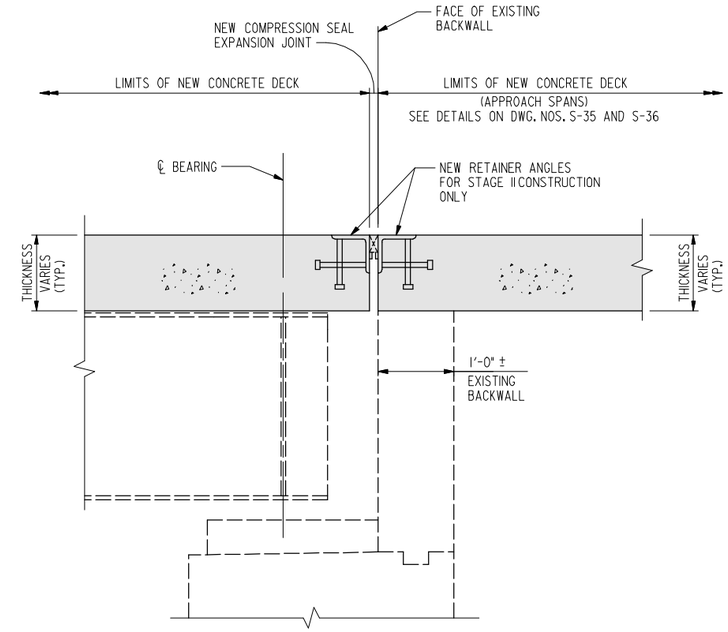

SECTION C–C

NOTES:

1. FOR COMPRESSION SEAL SIZES, SEE SHA STD. NO. BR-SS(7.01)-77-63 MOD. ON DWG. NO. STD-4.
2. FOR JOINT SPLICE DETAILS, SEE SHA STD. BR-SS(7.09)-80-113.

CONSTRUCTION DETAILS AT ABUTMENTS – JOINT TYPE 1

SCALE: 1" = 1'-0"

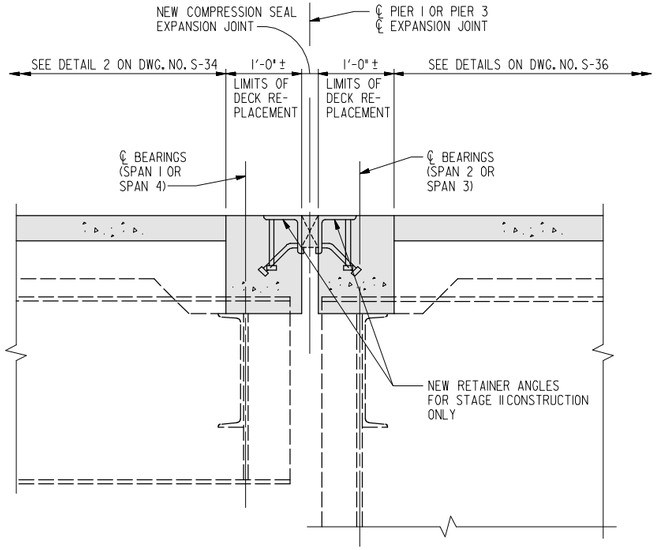

SECTION D–D

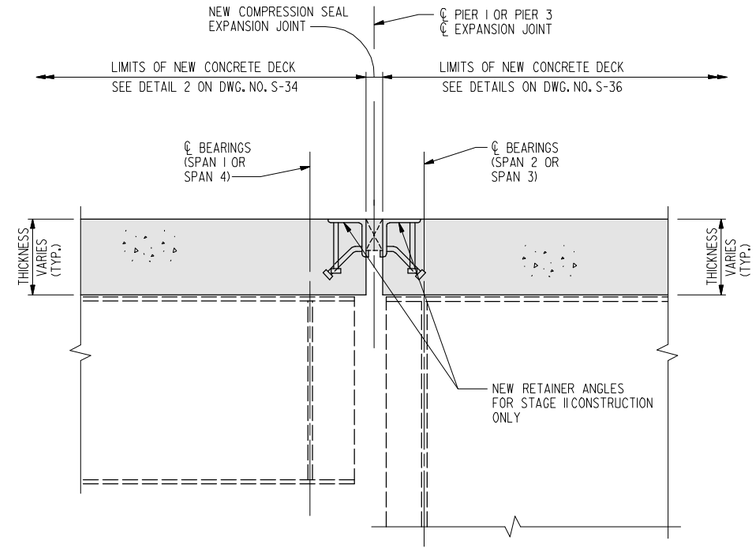

SECTION C–C

CONSTRUCTION DETAILS AT PIERS – JOINT TYPE 1

SCALE: 1" = 1'-0"

LEGEND:

INDICATES NEW CONSTRUCTION

RK&K
81 MOSHER STREET | BALTIMORE, MD 21217
PH: (410) 728-2900 FAX: (410) 728-3180
Engineers Construction Managers Planners Scientists
www.rkk.com

ALA
ATHAVALE, LYSTAD & ASSOCIATES INC.
Consulting Engineers Rockville, Maryland

MARYLAND TRANSPORTATION AUTHORITY
Engineering Division

ADDENDUMS & REVISIONS

NO.	DESCRIPTION	BY	DATE

I-95 FROM MORAVIA ROAD TO THE FORT McHENRY TUNNEL - PHASE 1 - SOUTHBOUND

I-95 (BALTIMORE CITY)
BRIDGE NO. BCW 598-2 - I-95 S.B. OVER RAMP "B" & CSX R.R.
DECK JOINT DETAILS - 4

DESIGNED BY K.A. | DRAWN BY J.E. | CHECKED BY D.W.
CONST. REVIEW BY | DATE DECEMBER 2009 | SCALE AS SHOWN

CONTRACT NO. FT 928-000-006
DRAWING NO. **S-41**
SHEET NO. 123 OF 188

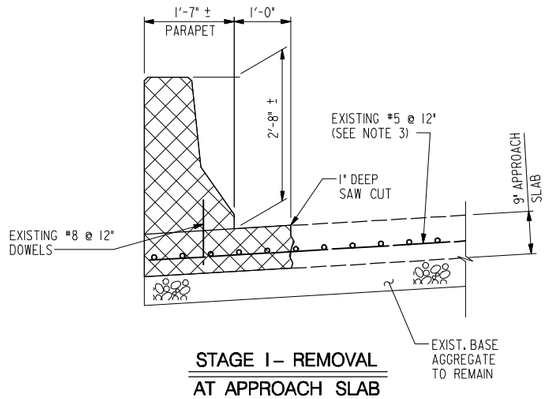

STAGE I – REMOVAL AT APPROACH SLAB

SCALE: 3/4" = 1'-0"

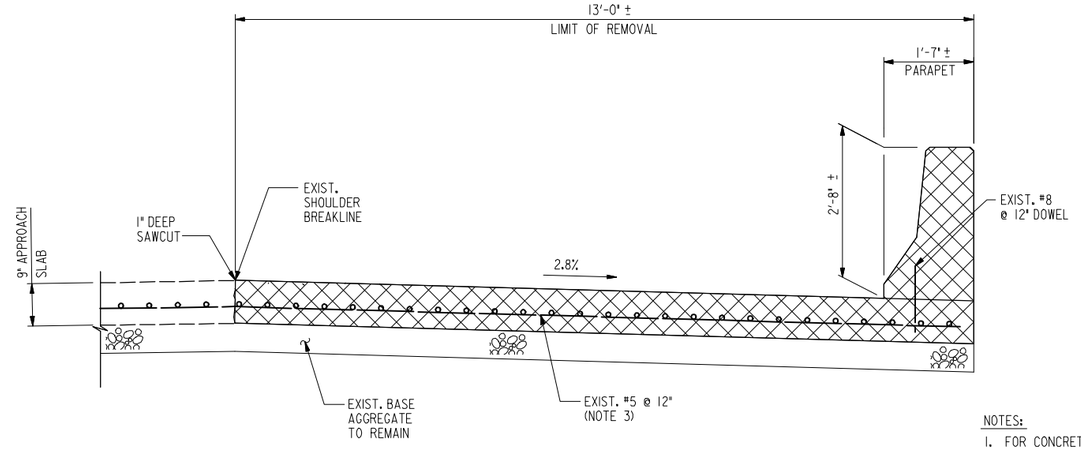

STAGE II – REMOVAL AT APPROACH SLAB

SCALE: 3/4" = 1'-0"

NOTES:

1. FOR CONCRETE SPECIFICATIONS, SEE GENERAL NOTES.
2. ALL REINFORCING STEEL IN APPROACH SLABS SHALL BE EPOXY COATED.
3. CONTRACTOR SHALL PROTECT EXISTING REINFORCING STEEL TO BE INCORPORATED INTO NEW CONSTRUCTION. MAINTAIN MIN. 2'-0" LAP LENGTH TO TIE WITH NEW #5 @ 12" BARS.
4. APPROACH SLAB WILL BE MEASURED AND PAID FOR AT THE CONTRACT UNIT PRICE PER CUBIC YARD FOR THE "CONCRETE FOR APPROACH SLAB" PAY ITEM.
5. COST OF PARAPET ON APPROACH SLAB WILL BE INCLUDED IN THE CONTRACT LUMP SUM PRICE FOR CONCRETE PARAPET PAY ITEM.

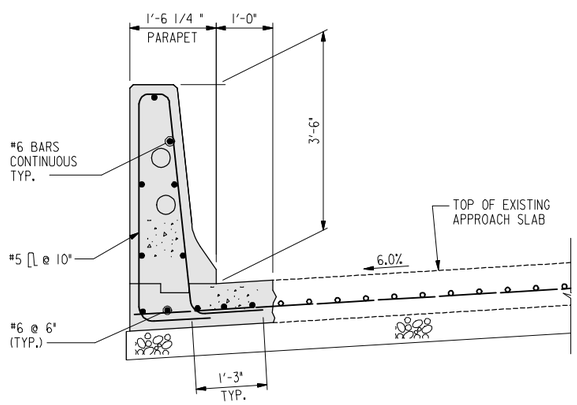

STAGE I – CONSTRUCTION AT APPROACH SLAB

SCALE: 3/4" = 1'-0"

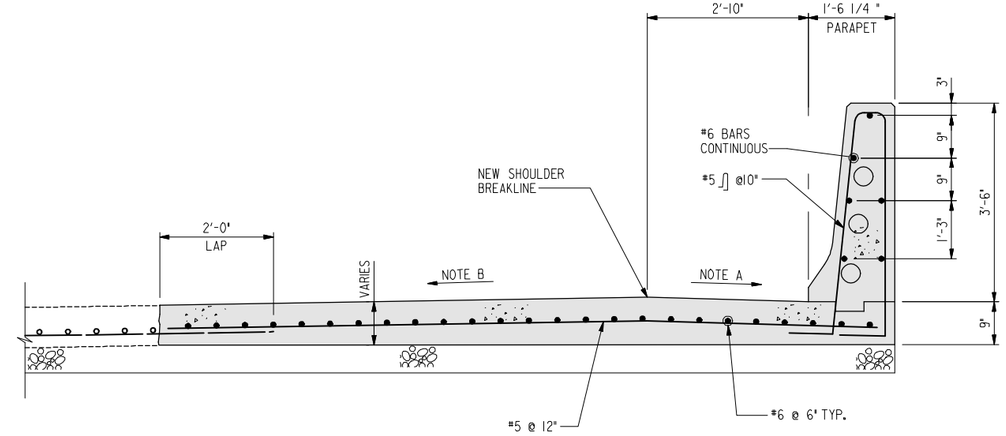

STAGE II – CONSTRUCTION AT APPROACH SLAB

SCALE: 3/4" = 1'-0"

NOTE A:

FOR CROSS SLOPE INFORMATION, SEE ROADWAY PLANS DWG. NOS. SE-01 THRU SE-03.

NOTE B:

CONTRACTOR SHALL MATCH EXISTING CROSS SLOPE.

LEGEND:

- PORTION OF STRUCTURE TO BE REMOVED
- NEW CONSTRUCTION

RK&K
81 MOSHER STREET | BALTIMORE, MD 21217
PH: (410) 728-2900 FAX: (410) 728-3180
Engineers Construction Managers Planners Scientists
www.rkk.com

ALA
ATHAVALE, LYSTAD & ASSOCIATES INC.
Consulting Engineers Rockville, Maryland

MARYLAND TRANSPORTATION AUTHORITY
Engineering Division

ADDENDUMS & REVISIONS			
NO.	DESCRIPTION	BY	DATE

I-95 FROM MORAVIA ROAD TO THE FORT McHENRY TUNNEL - PHASE 1 - SOUTHBOUND
I-95 (BALTIMORE CITY)
BRIDGE NO. BCW 598-2 - I-95 S.B. OVER RAMP "B" & CSX R.R.
APPROACH SLAB DETAILS

DESIGNED BY K.A.	DRAWN BY J.E.	CHECKED BY D.W.
CONST. REVIEW BY	DATE DECEMBER 2009	SCALE AS SHOWN

CONTRACT NO. FT 928-000-006
DRAWING NO. S-42
SHEET NO. 124 OF 188

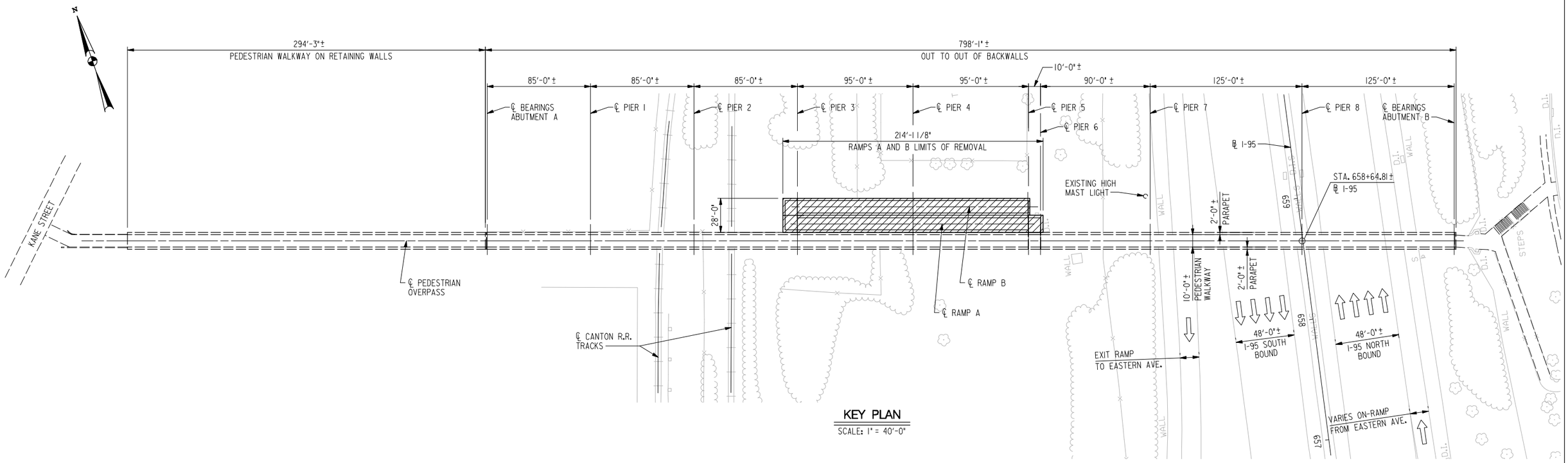

KEY PLAN

SCALE: 1" = 40'-0"

GENERAL NOTES:

SPECIFICATIONS:

ALL DEMOLITION WORK AND THE DESIGN AND IMPLEMENTATION OF ALL TEMPORARY SHORING AND SUPPORT WORKS, INCLUDING MATERIALS, EQUIPMENT AND WORKMANSHIP SHALL BE IN ACCORDANCE WITH THE MDSHA STANDARD SPECIFICATIONS FOR CONSTRUCTION AND MATERIALS DATED JULY 2008, REVISIONS THEREOF AND THERETO, AND THE AASHTO GUIDE DESIGN SPECIFICATIONS FOR BRIDGE TEMPORARY WORKS.

THE CONTRACTOR SHALL ERECT AND MAINTAIN, DURING ALL STAGES OF WORK, EROSION AND SEDIMENT CONTROL MEASURES AS SPECIFIED IN THE PROJECT SPECIFICATIONS.

DESIGN AND STABILITY CALCULATIONS FOR ALL TEMPORARY BRACING, PROTECTIVE SHIELDS, AND DEMOLITION PLANS SHALL BE SUBMITTED TO THE MDTA FOR REVIEW AND APPROVAL PRIOR TO USE.

EXISTING STRUCTURE:

ALL DIMENSIONS AFFECTED BY THE GEOMETRICS AND/OR LOCATION OF THE EXISTING STRUCTURE SHALL BE CHECKED IN THE FIELD BY THE CONTRACTOR BEFORE ANY CONSTRUCTION IS PERFORMED. IT SHALL BE THE RESPONSIBILITY OF THE CONTRACTOR TO SUPPLY THE ENGINEER WITH ALL FIELD DIMENSIONS REQUIRED TO CHECK DETAIL DRAWINGS. THE ± MARKS SHOWN WITH DIMENSIONS AND STATIONS DO NOT INDICATE ANY DEGREE OF PRECISION. THESE MARKS (±) INDICATE EXISTING DIMENSIONS AND STATIONS THAT MAY VARY AND DO REQUIRE VERIFICATION BY THE CONTRACTOR.

EXISTING STRUCTURE TO REMAIN SHOWN IN LONG DASHED LINES. PORTIONS OF EXISTING STRUCTURES TO BE REMOVED ARE SHOWN HATCHED.

WORK REQUIRED:

1. EXISTING ACCESS RAMPS A AND B AT MID-BRIDGE TO BE REMOVED.

2. RAMP SUBSTRUCTURE TO BE REMOVED TO 1'-0" MINIMUM BELOW EXISTING GRADE.

3. CONSTRUCT CONCRETE BARRIER AND TYPE II FENCING ON EXISTING BRIDGE AT ACCESS TO RAMP.

REFERENCE DRAWINGS:

FOR THE CONVENIENCE AND INFORMATION OF BIDDERS, PRINTS OF PLANS FOR THE EXISTING PERTINENT STRUCTURE ARE INCLUDED WITH THIS CONTRACT. NO REPSONSIBILITY FOR THEIR ACCURACY OR COMPLETENESS IS ASSUMED BY THE MARYLAND TRANSPORTATION AUTHORITY. DIMENSIONS, DETAILS, ETC. AS SHOWN MAY NOT BE AS-BUILT. INCLUDED FOR YOUR USE ARE:

CONTRACT NO. BC 246-39-815, SHEETS 1 THRU 36.

CONSTRUCTION ACCESS:

CONTRACTOR SHALL ACCESS THE EXISTING RAMP FROM SOUTHBOUND I-95 NORTH OF THE PEDESTRIAN BRIDGE. CONTRACTOR SHALL REMOVE AND REPLACE RIGHT-OF-WAY FENCING AFFECTED BY ACCESS OF EQUIPMENT AND PERSONNEL TO CONSTRUCTION AREA.

CONTRACTOR SHALL NOT VIOLATE THE RAILROAD RIGHT-OF-WAY (A MINIMUM OF 25-FT FROM THE CENTERLINE OF THE NEAREST TRACK).

COSTS FOR ALL GRADING NECESSARY TO ACCESS THE SITE SHALL BE INCLUDED IN THE CONTRACT LUMP SUM PRICE FOR REMOVAL OF PORTIONS OF EXISTING STRUCTURE FOR BRIDGE BCW588.

RETURN EXISTING GROUND TO ORIGINAL STATE FOLLOWING DEMOLITION. COST OF FILL SHALL BE INCLUDED THE CONTRACT LUMP SUM PRICE FOR REMOVAL OF PORTIONS OF EXISTING STRUCTURE FOR BRIDGE BCW588. SEE LANDSCAPING PLANS DWG. NO. LA-4.

LEGEND:

INDICATES PORTION OF EXISTING STRUCTURE TO BE REMOVED.

INDICATES NEW CONSTRUCTION

RK&K
81 MOSHER STREET | BALTIMORE, MD 21217
PH: (410) 728-2900 FAX: (410) 728-3180
Engineers Construction Managers Planners Scientists
www.rkk.com

ALA
ATHAVALE, LYSTAD & ASSOCIATES INC.
Consulting Engineers Rockville, Maryland

MARYLAND TRANSPORTATION AUTHORITY
Engineering Division

ADDENDUMS & REVISIONS

NO.	DESCRIPTION	BY	DATE

I-95 FROM MORAVIA ROAD TO THE FORT McHENRY TUNNEL - PHASE 1 - SOUTHBOUND

I-95 (BALTIMORE CITY)
BRIDGE NO. BCW 588 - PEDESTRIAN OVERPASS OVER I-95
KEY PLAN

DESIGNED BY D.P.W. | DRAWN BY J.E. | CHECKED BY T.I.
CONST. REVIEW BY | DATE DECEMBER 2009 | SCALE AS SHOWN

CONTRACT NO. FT 928-000-006
DRAWING NO. S-43
SHEET NO. 125 OF 188

NOTES:
FOR ALL SECTIONS SEE DRAWING NO. S-43.

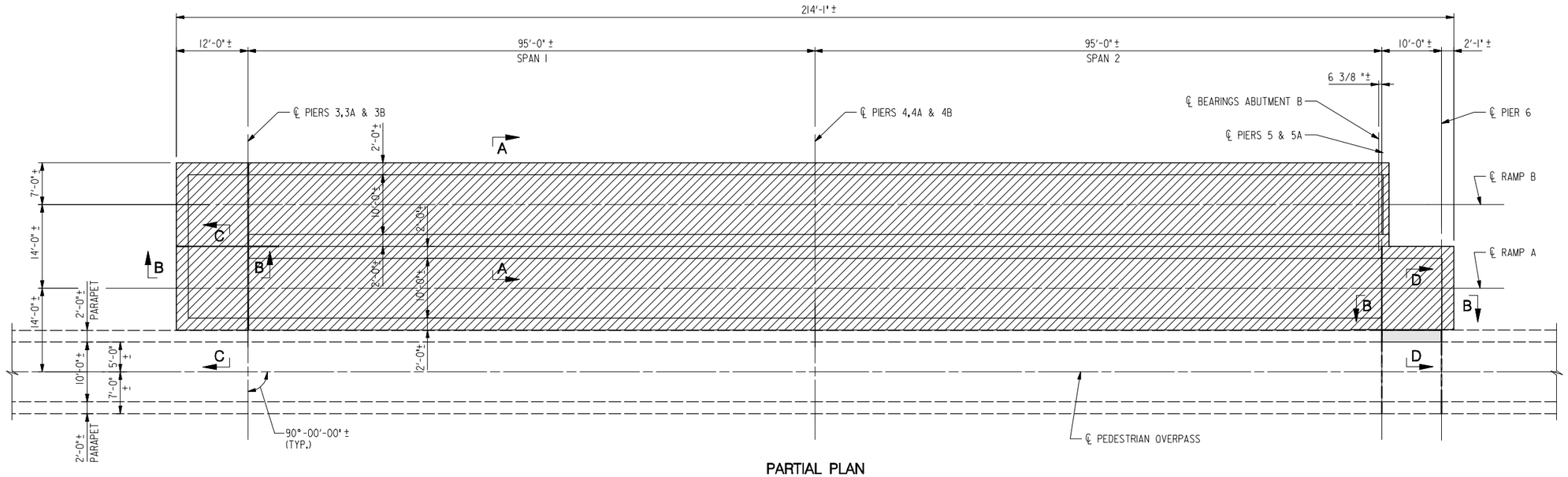

PARTIAL PLAN

SCALE: 1" = 10'-0"

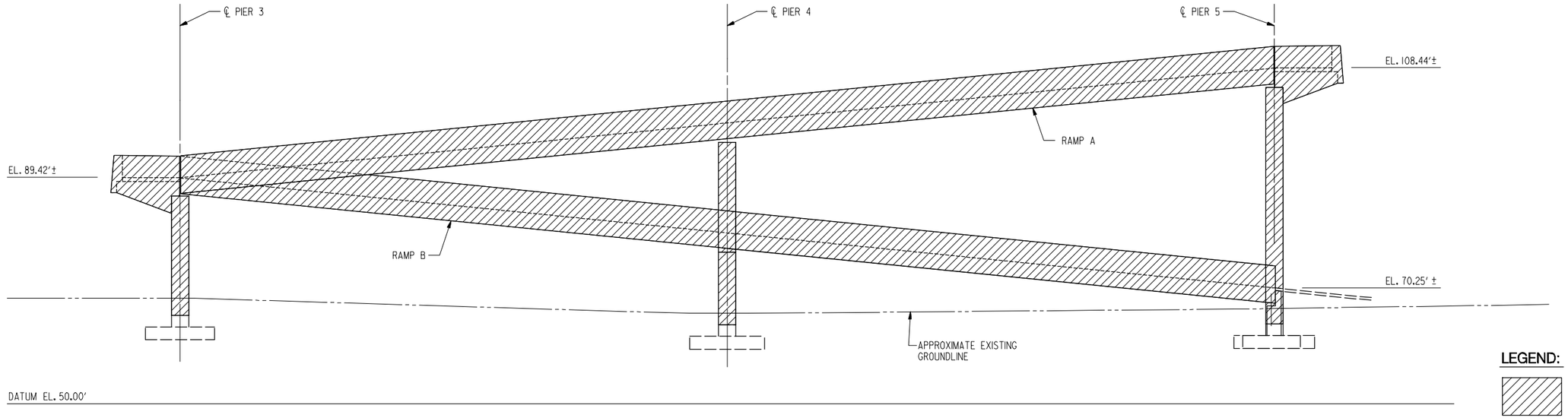

ELEVATION
(RAMPS A & B ONLY)

SCALE: 1" = 10'-0"

LEGEND:

- INDICATES PORTION OF EXISTING STRUCTURE TO BE REMOVED.
- INDICATES NEW CONSTRUCTION

RK&K
81 MOSHER STREET | BALTIMORE, MD 21217
PH: (410) 728-2900 FAX: (410) 728-3180
Engineers Construction Managers Planners Scientists
www.rkk.com

ALA
ATHAVALE, LYSTAD & ASSOCIATES INC.
Consulting Engineers Rockville, Maryland

MARYLAND TRANSPORTATION AUTHORITY
Engineering Division

ADDENDUMS & REVISIONS			
NO.	DESCRIPTION	BY	DATE

I-95 FROM MORAVIA ROAD TO THE FORT McHENRY TUNNEL - PHASE 1 - SOUTHBOUND
I-95 (BALTIMORE CITY)
BRIDGE NO. BCW 588 - PEDESTRIAN OVERPASS OVER I-95
GENERAL PLAN AND ELEVATION - RAMPS A AND B

DESIGNED BY D.P.W.	DRAWN BY J.E.	CHECKED BY T.I.
CONST. REVIEW BY	DATE DECEMBER 2009	SCALE AS SHOWN

CONTRACT NO. FT 928-000-006
DRAWING NO. **S-44**
SHEET NO. 126 OF 188

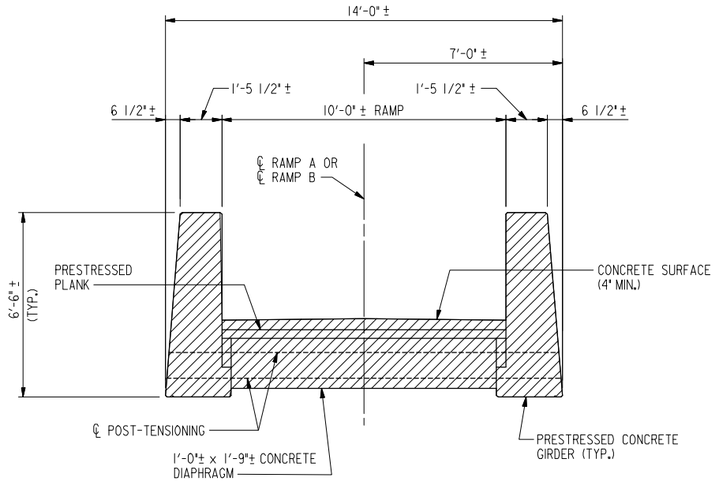

SECTION A–A

SCALE: 3/8" = 1'-0"

(RAMPS A & B, SPANS 1 & 2 ONLY)

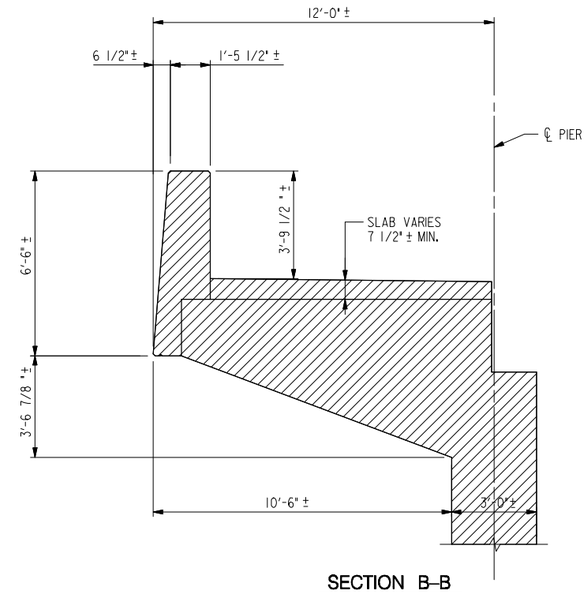

SECTION B–B

SCALE: 3/8" = 1'-0"

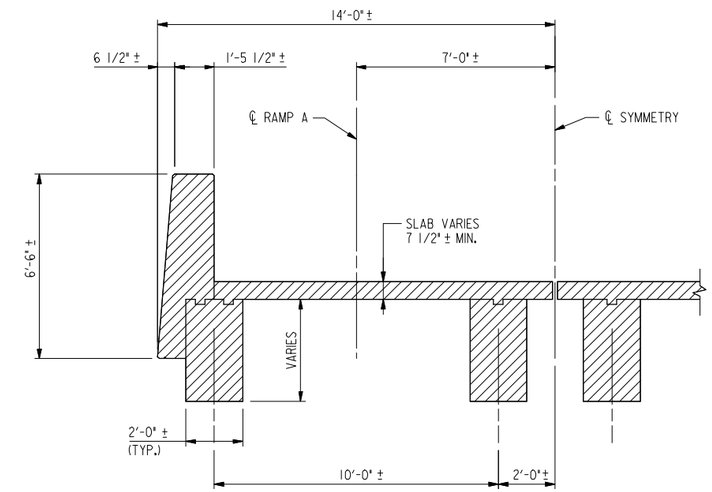

SECTION C–C

SCALE: 3/8" = 1'-0"

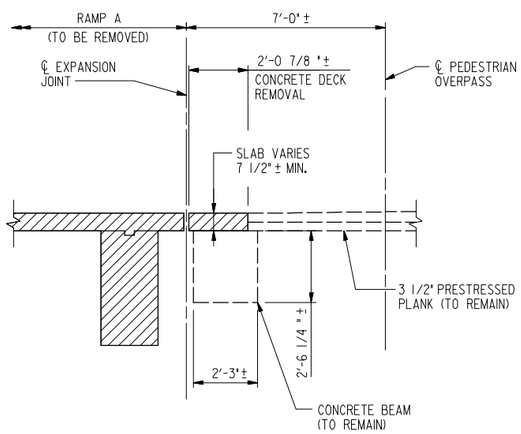

REMOVAL

SECTION D–D

SCALE: 3/8" = 1'-0"

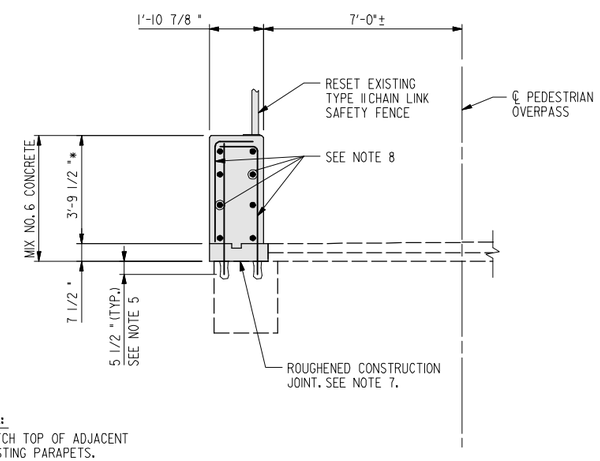

* NOTE:
MATCH TOP OF ADJACENT EXISTING PARAPETS.

CONSTRUCTION

SECTION D–D

SCALE: 3/8" = 1'-0"

NOTES:

1. CONCRETE GIRDERS IN SPANS 1 AND 2 (SHOWN IN SECTION A-A) ARE PRECAST, PRESTRESSED CONCRETE. CONCRETE DIAPHRAGMS IN SPANS 1 AND 2 ARE PRECAST AND POST-TENSIONED TO THE PRESTRESSED GIRDERS IN THE LOCATIONS SHOWN.
2. ALL CONCRETE SHOWN IN SECTIONS B-B AND C-C IS CAST-IN-PLACE WITH MILD REINFORCEMENT.
3. SECTION D-D APPLIES FOR 10'-0" LENGTH BETWEEN CL PIER 5 TO CL PIER 6.
4. REFER TO MD SHA STANDARD SPECIFICATIONS SECTION 421.03.07 FOR TYING NEW CONCRETE INTO EXISTING CONCRETE.
5. USE HILTI HY150 OR EQUIVALENT TO ANCHOR REBAR INTO EXISTING CONCRETE. FOLLOW MANUFACTURER'S INSTALLATION GUIDELINES. COST OF DRILLING HOLES IN EXISTING CONCRETE AND PLACING OF NEW BARS WILL BE INCIDENTAL TO THE CONTRACT UNIT PRICE FOR MIX NO. 6 CONCRETE. PLACEMENT OF NEW BARS SHALL AVOID EXISTING REINFORCEMENT IN EXISTING STRUCTURE.
6. CONTRACTOR SHALL PROVIDE EXPANSION JOINTS AND CONTRACTION JOINTS IN BARRIER TO MATCH EXISTING JOINTS IN DECK.
7. ROUGHEN THE FACE OF EXISTING CONCRETE. APPLY EPOXY RESIN ADHESIVE TO BOND NEW CONCRETE TO EXISTING CONCRETE.
8. ALL REINFORCING BARS IN SECTION D-D ARE #5 @ 12" MAX. O.C. EPOXY COATED UNLESS OTHERWISE NOTED.

LEGEND:

INDICATES PORTION OF EXISTING STRUCTURE TO BE REMOVED.

INDICATES NEW CONSTRUCTION

RK&K
81 MOSHER STREET | BALTIMORE, MD 21217
PH: (410) 728-2900 FAX: (410) 728-3180
Engineers Construction Managers Planners Scientists
www.rkk.com

ALA
ATHAVALE, LYSTAD & ASSOCIATES INC.
Consulting Engineers Rockville, Maryland

MARYLAND TRANSPORTATION AUTHORITY
Engineering Division

ADDENDUMS & REVISIONS

NO.	DESCRIPTION	BY	DATE

I-95 FROM MORAVIA ROAD TO THE FORT McHENRY TUNNEL - PHASE 1 - SOUTHBOUND

I-95 (BALTIMORE CITY)
BRIDGE NO. BCW 588 - PEDESTRIAN OVERPASS OVER I-95
SUPERSTRUCTURE - REMOVAL DETAILS

CONTRACT NO. FT 928-000-006
DRAWING NO. S–45

DESIGNED BY D.P.W. | DRAWN BY J.E. | CHECKED BY T.I.
CONST. REVIEW BY ____ | DATE DECEMBER 2009 | SCALE AS SHOWN

SHEET NO. 127 OF 188

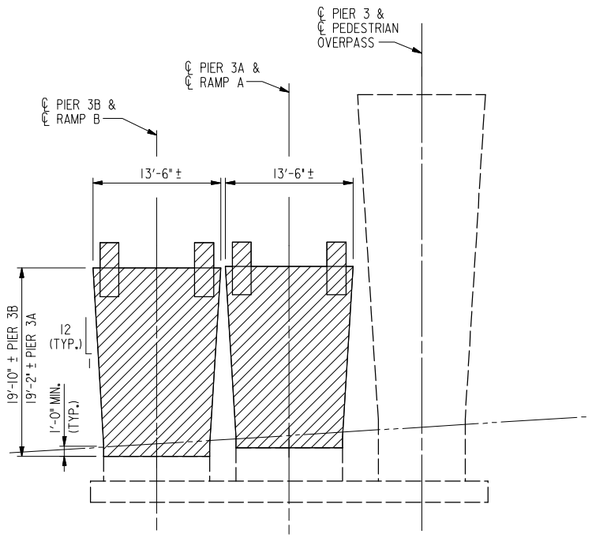

PIER 3 – ELEVATION

SCALE: 1/8" = 1'-0"

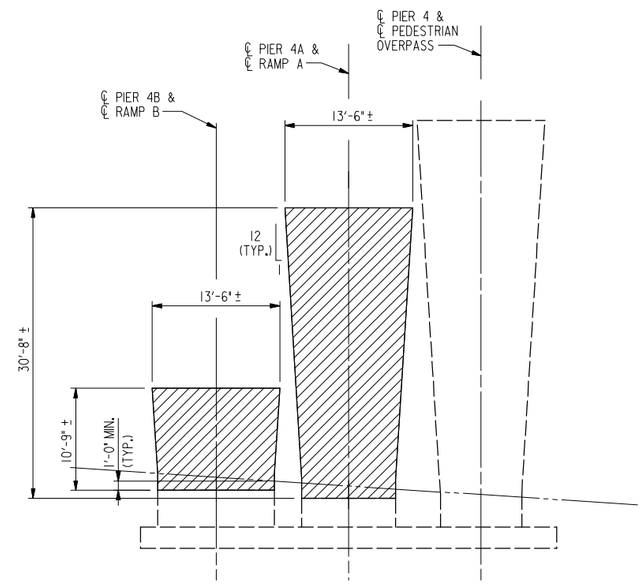

PIER 4 – ELEVATION

SCALE: 1/8" = 1'-0"

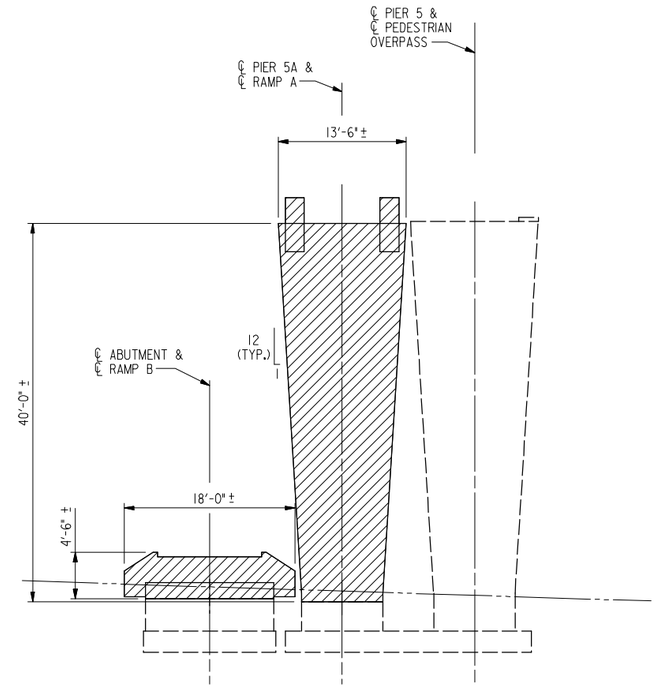

PIER 5 – ELEVATION

SCALE: 1/8" = 1'-0"

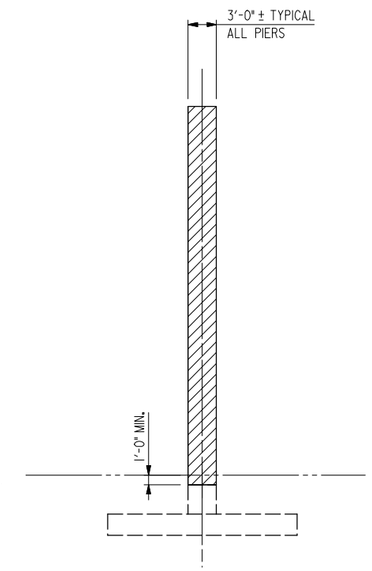

PIER – END VIEW

SCALE: 1/8" = 1'-0"

(PIER 5A SHOWN, OTHERS SIMILAR)

NOTES:

1. ALL DEMOLITION AND CONSTRUCTION ACTIVITIES SHALL TAKE PLACE ONLY IN THE HOURS ALLOWED. SEE SPECIAL PROVISION SP1.1 - PROJECT DESCRIPTION.
2. RETURN EXISTING GROUND TO ORIGINAL STATE FOLLOWING DEMOLITION. COST OF FILL SHALL BE INCIDENTAL TO THE PRICE PAID FOR REMOVAL OF PORTIONS OF EXISTING STRUCTURE FOR BRIDGE BCW588. SEE LANDSCAPING PLANS DWG. NO. LA-4.

LEGEND:

INDICATES PORTION OF EXISTING STRUCTURE TO BE REMOVED.

INDICATES NEW CONSTRUCTION

RK&K
81 MOSHER STREET | BALTIMORE, MD 21217
PH: (410) 728-2900 FAX: (410) 728-3180
Engineers Construction Managers Planners Scientists
www.rkk.com

ALA
ATHAVALE, LYSTAD & ASSOCIATES INC.
Consulting Engineers Rockville, Maryland

MARYLAND TRANSPORTATION AUTHORITY
Engineering Division

ADDENDUMS & REVISIONS

NO.	DESCRIPTION	BY	DATE

I-95 FROM MORAVIA ROAD TO THE FORT McHENRY TUNNEL - PHASE 1 - SOUTHBOUND

I-95 (BALTIMORE CITY)
BRIDGE NO. BCW 588 - PEDESTRIAN OVERPASS OVER I-95
SUBSTRUCTURE - REMOVAL DETAILS

DESIGNED BY D.P.W. | DRAWN BY J.E. | CHECKED BY T.I.
CONST. REVIEW BY _____ | DATE DECEMBER 2009 | SCALE AS SHOWN

CONTRACT NO. FT 928-000-006
DRAWING NO. S-46
SHEET NO. 128 OF 188

DRILL HOLES

DRILL HOLES

DRILL HOLES

BRIDGE MOUNTED OVERHEAD SIGN STRUCTURE GENERAL NOTES:

SPECIFICATIONS: SHA SPECIFICATIONS DATED JULY, 2008.

REVISIONS THEREOF AND ADDITIONS THERETO AND SPECIAL PROVISIONS FOR MATERIALS AND CONSTRUCTION.

AASHTO STANDARD SPECIFICATIONS FOR STRUCTURAL SUPPORTS FOR HIGHWAY SIGNS, LUMINAIRES AND TRAFFIC SIGNALS DATED 2001 FOR DESIGN INCLUDING ALL INTERIM SPECIFICATIONS THROUGH 2006 FOR THE OVERHEAD SPAN SIGN STRUCTURES INCLUDING ANCHOR BOLT DESIGN.

AASHTO STANDARD SPECIFICATIONS FOR HIGHWAY BRIDGES DATED 2002 FOR THE DESIGN OF THE NEW SIGN STRUCTURE SUPPORTS SUPPORTING THE OVERHEAD SPAN SIGN STRUCTURES.

CONCRETE DESIGN: SERVICE LOAD DESIGN METHOD FC = 1800 PSI.

REINFORCING STEEL DESIGN: FS = 24,000 PSI.

LOADING: NEW SIGN STRUCTURE SUPPORTS - HS-20 WITH PROVISIONS FOR 15 PSF FOR USE OF STEEL BRIDGE DECK FORMS WHICH REMAIN IN PLACE IN ADDITION TO THE OVERHEAD SIGN STRUCTURE REACTIONS. NO PROVISIONS FOR FUTURE 2" WEARING SURFACE HAVE BEEN MADE FOR NEW SIGN STRUCTURE SUPPORTS.

OVERHEAD SIGN STRUCTURES - DEAD LOAD, WIND LOAD AND ICE LOAD AS STIPULATED IN THE AASHTO STANDARD SPECIFICATIONS FOR STRUCTURAL SUPPORTS FOR HIGHWAY SIGNS, LUMINAIRES AND TRAFFIC SIGNALS DATED 2001 INCLUDING ALL INTERIM SPECIFICATIONS THROUGH 2006.

CONCRETE: ALL CONCRETE SHALL BE MIX NO. 6 (4500 PSI). SEE SPECIAL PROVISIONS.

REINFORCING STEEL: REINFORCING STEEL SHALL CONFORM TO A 615, GRADE 60. ALL SPLICES, NOT SHOWN, SHALL BE LAPPED AS PER BAR LAP CHARTS. MINIMUM COVER FOR ANY BAR SHALL BE 2" UNLESS OTHERWISE NOTED.

FOR STIRRUPS, STANDARD ACI BENDING TOLERANCES ARE MODIFIED TO PLUS (+) ZERO INCHES, MINUS (-) NORMAL ACI BENDING TOLERANCES.

ONLY GRADE 60 CAN BE USED ON THIS PROJECT.

ALL NEW REINFORCING STEEL SHALL BE EPOXY COATED.

KEYS: ALL KEYS ARE NOMINAL SIZE.

EXISTING STRUCTURES: PLANS OF EXISTING STRUCTURES ARE PROVIDED AND MAY BE USED IN CONJUNCTION WITH THESE PLANS WHEN DETERMINING EXISTING FEATURES, DETAILS AND/OR DIMENSIONS. SEE NOTE A THIS DWG. FOR ADDITIONAL INFORMATION ON THE PLANS OF EXISTING STRUCTURES. THE EXISTING PLAN REFERENCES FOR EACH EXISTING AND PROPOSED SIGN STRUCTURE ARE LISTED ON THIS DRAWING. ANY DAMAGE INCURRED TO EXISTING PORTIONS OF THE STRUCTURES TO REMAIN RESULTING FROM THE CONTRACTOR'S OPERATIONS SHALL BE REPAIRED ALL AT THE CONTRACTOR'S EXPENSE TO THE SATISFACTION OF THE ENGINEER.

ALL DIMENSIONS SHOWN ARE APPROXIMATE. ALL DIMENSIONS AFFECTED BY THE GEOMETRICS AND/OR LOCATION OF THE EXISTING STRUCTURE SHALL BE CHECKED IN THE FIELD BY THE CONTRACTOR BEFORE ANY CONSTRUCTION IS DONE AND BEFORE ANY MATERIAL IS ORDERED OR FABRICATED. THE ± MARKS SHOWN WITH DIMENSIONS DO NOT INDICATE ANY DEGREE OF PRECISION. THESE MARKS ( ) INDICATE EXISTING DIMENSIONS THAT MAY VARY AND DO REQUIRE FIELD VERIFICATION BY THE CONTRACTOR.

IF THE GEOMETRICS DIFFER FROM THAT SHOWN ON THE PLANS, THE ENGINEERING DIVISION OF THE AUTHORITY SHALL BE CONTACTED FOR EVALUATION. IT SHALL BE THE RESPONSIBILITY OF THE CONTRACTOR TO SUPPLY THE ENGINEER WITH ALL FIELD DIMENSIONS REQUIRED TO CHECK DETAIL DRAWINGS. THE CONTRACTOR SHALL CONSIDER THE LENGTH OF TIME FOR REVIEW OF SHOP DRAWINGS AND FABRICATION IN HIS SCHEDULE OF WORK.

CHAMFERS: ALL EXPOSED CORNERS OF CONCRETE ELEMENTS SHALL BE CONSTRUCTED WITH $\frac{3}{4}" \times \frac{3}{4}"$ CHAMFERS.

TYING INTO NEW DECK OVERHANG: THE THICKNESS OF THE DECK AND OVERHANG OF THE NEW SIGN STRUCTURE SUPPORT MAY BE DIFFERENT THAN THE OVERHANG THICKNESS OF ADJOINING DECK OVERHANG THICKNESS. THE PROPOSED OVERHANG AND DECK AT THE NEW SIGN STRUCTURE SUPPORT SHALL BE TRANSITIONED TO MATCH THE ADJOINING DECK OVERHANG THICKNESS USING A 1:1 HAUNCH AT THE LIMITS OF THE NEW SIGN STRUCTURE SUPPORT.

CHAIN LINK FENCE: REFER TO DWG. NO. S-58 FOR ADDITIONAL INFORMATION.

CONDUITS AND JUNCTION BOXES: CONDUITS TO BE CAST INTO THE MODIFIED PROPOSED F-SHAPE PARAPET AND NEW SIGN STRUCTURE SUPPORTS SHALL BE 3" DIAMETER UNLESS NOTED OTHERWISE. ALL 3" DIAMETER CONDUITS SHALL BE SCHEDULE 40 PVC IN CONFORMANCE WITH 921.07.02. THE $1\frac{1}{4}"$ GALVANIZED CONDUIT TO BE INSTALLED FROM THE POWER SUPPLY JUNCTION BOX TO THE OVERHEAD SIGN STRUCTURE SHALL CONFORM TO 921.07.01. JUNCTION BOXES SHALL BE STAINLESS STEEL TYPE 304. ALL JUNCTION BOXES SHALL BE UL LISTED OR LABELED AND CONFORM TO NEMA.

PARAPET CONTROL JOINTS: IN ADDITION TO THE PARAPET CONTROL JOINT SHOWN AT THE TRANSITION BETWEEN THE MODIFIED PROPOSED F-SHAPE PARAPET AND THE PROPOSED SIGN STRUCTURE SUPPORT, PARAPET CONTROL JOINTS SHALL BE SAW CUT INTO THE F-SHAPE PARAPET IN CONFORMANCE WITH STD. NO. BR-SS(6.37)-05-247B ON DWG. NO. STD-3 .

TEMPORARY CONCRETE BARRIER: BOLTED TEMPORARY PRECAST DOUBLE FACE F-TYPE CONCRETE BARRIER WITH TEMPORARY PROTECTIVE SHIELD SHALL BE INSTALLED AS SHOWN ON DWG. NO. S-49, AS SHOWN ON MT DRAWINGS AND AS DESCRIBED IN THE SPECIAL PROVISIONS. REFERENCE SPECIAL PROVISIONS FOR REMOVAL OF PORTIONS OF EXISTING STRUCTURES FOR ADDITIONAL INFORMATION AND REQUIREMENTS OF THE TEMPORARY PROTECTIVE SHIELD.

SUGGESTED SEQUENCE OF CONSTRUCTION FOR NEW SIGN STRUCTURE SUPPORTS:

1. INSTALL TEMPORARY PRECAST DOUBLE FACE F-TYPE CONCRETE BARRIER AS SHOWN ON THE TRAFFIC CONTROL PLANS. ANCHOR THE BARRIER AS SHOWN ON STD. NO. M(5.10)-84-158 ON DWG. NOS. STD-8 AND STD-9. USE APPROPRIATE MOT SET-UP. REFERENCE THE PERTINENT TRAFFIC CONTROL PLANS DRAWINGS (MT-5 AND MT-13).
2. TEMPORARILY RELOCATE EXISTING UTILITY LOCATED IN THE CONDUITS IN THE EXISTING PARAPETS LOCATED WITHIN THE WORK (IF NECESSARY). SEE DWG. NOS. E-1 THRU E-7 FOR ADDITIONAL DETAILS.
3. REMOVE EXISTING CHAIN LINK FENCE AND SIGNS THAT MAY BE LOCATED WITHIN THE WORK LIMITS. THE CHAIN LINK FENCE SHALL BE SALVAGED.
4. SURVEY THE TOP OF EXISTING DECK AND PARAPET WITHIN THE LIMITS OF WORK TO OBTAIN NECESSARY INFORMATION TO CONSTRUCT THE NEW SIGN STRUCTURE SUPPORT TO MATCH EXISTING AND DETERMINE THE PROPER DIMENSIONS FOR FABRICATION OF THE OVERHEAD SPAN SIGN STRUCTURE TOWERS, TRUSSES AND CLAMP PLATES.
5. INSTALL DEMOLITION SHIELDS. SEE SPECIAL PROVISIONS FOR ADDITIONAL INFORMATION.
6. LOCATE THE TOP FLANGE OF THE EXISTING GIRDERS POSITIONED WITHIN THE WORK LIMITS. SEE DWG. NO. S-48 AND THE SPECIAL PROVISIONS FOR ADDITIONAL INFORMATION.
7. SAW CUT THE EXISTING DECK AND REMOVE EXISTING DECK AND PARAPET CONCRETE. SEE DWG. NO. S-48 AND THE 'EXISTING DECK PLAN AND SECTION - REMOVAL LIMITS' FOR THE SIGN STRUCTURE SUPPORT LOCATION. SEE DWG. NO. S-48 FOR THE LENGTH OF EXISTING DECK REINFORCEMENT TO REMAIN.
8. CONFIRM THE EXISTING DECK THICKNESS AND THE DECK REINFORCEMENT BAR SIZES AND SPACING SHOWN ON THE 'EXISTING DECK PLAN AND SECTION - REMOVAL LIMITS' FOR THE SIGN STRUCTURE LOCATION. CONTACT THE ENGINEERING DIVISION OF THE AUTHORITY IMMEDIATEY IF THE FIELD CONDITIONS ARE DIFFERENT THAN THE INFORMATION SHOWN ON THE PLANS. IF FIELD CONDITIONS ARE DIFFERENT, NO ADDITIONAL WORK SHALL COMMENCE IN THIS SPECIFIC SIGN STRUCTURE SUPPORT LOCATION UNTIL DIRECTED.
9. PREPARE EXISTING REINFORCEMENT STEEL TO BE INCORPORATED INTO THE PROPOSED CONSTRUCTION AS INDICATED ON THE 'PROPOSED REINFORCEMENT DETAILS' FOR THE SIGN STRUCTURE LOCATION. SEE SPECIAL PROVISIONS FOR ADDITIONAL INFORMATION.
10. INSTALL NEW REINFORCEMENT STEEL, SIGN STRUCTURE ANCHOR BOLTS, CONDUITS, JUNCTION BOXES, SCUPPERS, ETC. AS SHOWN FOR THE SIGN STRUCTURE LOCATION AND CONSTRUCT THE PROPOSED CONCRETE DECK AND PARAPET.
11. REINSTALL THE SALVAGED CHAIN LINK FENCE.
12. REMOVE TEMPORARY BARRIER AND FILL HOLES FOR ANCHOR BOLTS WITH EPOXY GROUT. SEE STD. NO. M(5.10)-84-158 ON DWG. NO. STD-8 AND STD-9. USE APPROPRIATE MOT SET-UP. REFERENCE THE PERTINENT TRAFFIC CONTROL PLANS DRAWINGS (MT-5 AND MT-13).
13. PERFORM THE WORK LISTED IN ITEMS 1 THROUGH 12 FOR THE NEW SIGN STRUCTURE SUPPORT LOCATED ON THE OPPOSITE SIDE OF THE ROADWAY.
14. ONCE THE PARAPET AND DECK CONCRETE HAVE ATTAINED A MINIMUM COMPRESSIVE STRENGTH OF 4,500 PSI, THE SIGN STRUCTURE TOWERS AND TRUSS MAY BE INSTALLED. SEE SPECIAL PROVISIONS FOR ADDITIONAL INFORMATION.

NOTE A:

FOR THE CONVENIENCE AND INFORMATION OF BIDDERS, A CD CONTAINING FILES OF THE PLANS FOR THE EXISTING PERTINENT STRUCTURES ARE INCLUDED WITH THIS CONTRACT. NOTE THAT THIS INFORMATION IS PROVIDED FOR THE CONVENIENCE OF THE CONTRACTOR. NO RESPONSIBILITY FOR THE ACCURACY OR COMPLETENESS OF THESE FILES IS ASSUMED BY THE AUTHORITY. DIMENSIONS, DETAILS, ETC. AS SHOWN THEREON MAY NOT BE "AS-BUILT".

INCLUDED FOR YOUR USE ARE THE FOLLOWING EXISTING CONTRACT NOS.:

EXISTING CONTRACT NO.	CORRESPONDING DWG. NO.
1996	SN-2.2 TO SN-2.4

REFER TO TABLES BELOW FOR A LIST OF EXISTING CONTRACT NOS. AND ASSOCIATED DRAWINGS THAT PERTAIN TO EACH EXISTING AND PROPOSED SIGN STRUCTURE LOCATION.

PROPOSED BRIDGE MOUNTED OVERHEAD SIGN STRUCTURES

PROPOSED SIGN STRUCTURE NUMBER	PERTINENT SIGNING DWG. NO. WITHIN THIS CONTRACT	GENERAL LOCATION (SEE NOTE 2)	PERTINENT STRUCTURAL DWG. NOS. WITHIN THIS CONTRACT	CONTRACT NO. FOR EXISTING PLANS
OH-52	SN-2.3	SB I-95 - 55 FT NORTH OF MP 59.3	S-47 THRU S-59	1996

REMOVAL OF EXISTING BRIDGE MOUNTED OVERHEAD SIGN STRUCTURES

EXISTING SIGN STRUCTURE NO.	PERTINENT SIGNING DWG. NO. WITHIN THIS CONTRACT	GENERAL LOCATION (SEE NOTE 2)	TYPE OF SIGN STRUCTURE MOUNTING	PERTINENT STRUCTURAL DWG. NOS. WITHIN THIS CONTRACT	CONTRACT NO. FOR EXISTING PLANS	PERTINENT SHEET NOS. OF EXISTING PLANS
ESS-44	SN-2.2	SB I-95 - 15 FT NORTH OF MP 59.1	STEEL GIRDER	S-59	1996	S-63
ESS-45	SN-2.3	SB I-95 - 25 FT NORTH OF MP 59.3	STEEL GIRDER	S-59	1996	S-63

DETAIL NOTES:

1. THE EXISTING SIGN STRUCTURE, BASE PLATE AND ASSOCIATED ANCHOR BOLT NUTS AND WASHERS SHALL BE REMOVED. NO CONCRETE AT THE EXISTING SIGN STRUCTURE LOCATIONS SHALL BE REMOVED UNLESS AUTHORIZED BY THE ENGINEERING DIVISION OF THE AUTHORITY.
2. REFERENCES TO MILE POSTS ARE APPROXIMATE AND ARE BASED ON PROPOSED MILE POST LOCATIONS.

WR&A
Whitman, Requardt and Associates, LLP
Engineers and Planners
801 S. Caroline Street
Baltimore, Maryland 21231
(410) 235-3450

Maryland Transportation Authority
Engineering Division

ADDENDUMS & REVISIONS

NO.	DESCRIPTION	BY	DATE

m:\315491O\FT-928\FT-928_GENERAL.DGN 10/28/2009

I-95 FROM MORAVIA ROAD TO THE FORT McHENRY TUNNEL - PHASE 1 - SOUTHBOUND
I-95 (BALTIMORE CITY)
GENERAL NOTES

DESIGNED BY J.T.L. | DRAWN BY W.R.A. | CHECKED BY W.A.G.
CONST. REVIEW BY | DATE DECEMBER 2009 | SCALE AS SHOWN

CONTRACT NO. FT-928-000-006
DRAWING NO. S-47
SHEET NO. 129 OF 188

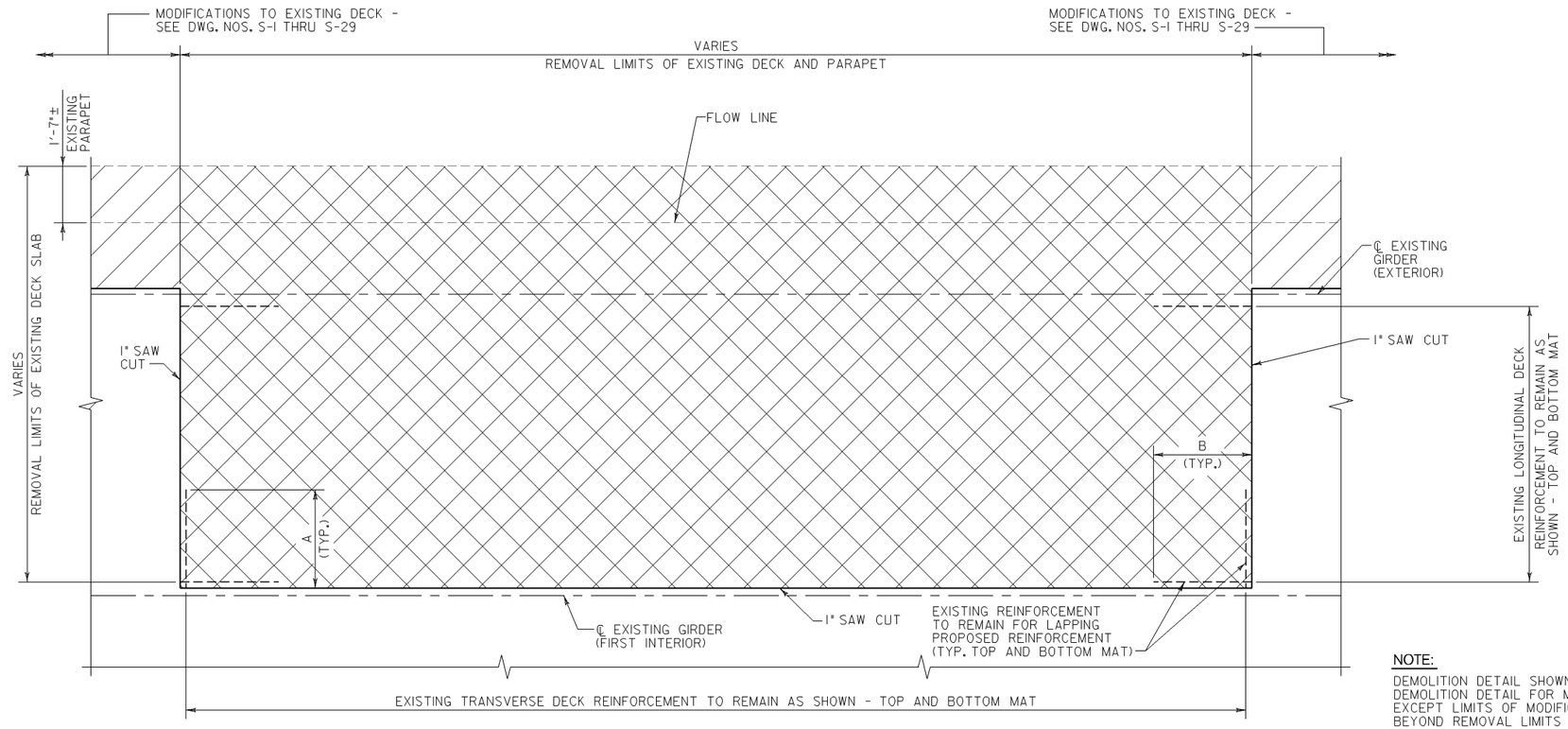

TYPICAL CONCRETE DECK DEMOLITION DETAIL

SCALE: 1/2" = 1'-0"

LENGTH OF EXISTING DECK REINFORCEMENT TO REMAIN			
PROPOSED SIGN STRUCTURE NUMBER	WORKING POINT	DIMENSION	
		A	B
OH-52	WP-52-1*	2'-8"/3'-5"	2'-9"
	WP-52-2*	2'-8"/3'-5"	2'-9"

* = A DIMENSION SHOWN REPRESENTS TOP STRAIGHT BAR/BOTTOM STRAIGHT BAR

LENGTH OF TRUSS BAR DECK REINFORCEMENT TO REMAIN		
PROPOSED SIGN STRUCTURE NUMBER	WORKING POINT	C
OH-52	WP-52-1	3'-3"
	WP-52-2	3'-3"

NOTE:

DEMOLITION DETAIL SHOWN AT OUTSIDE SHOULDER. DEMOLITION DETAIL FOR MEDIAN SHOULDER SIMILAR EXCEPT LIMITS OF MODIFICATIONS TO EXISTING DECK BEYOND REMOVAL LIMITS FOR OH-52.

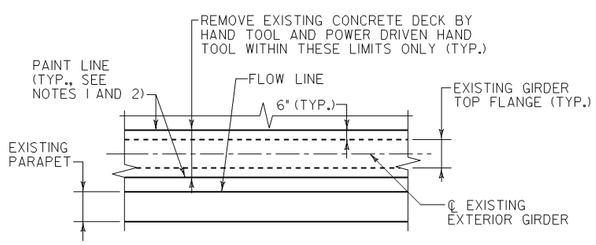

CONCRETE REMOVAL DETAIL OVER EXISTING GIRDER – PARTIAL PLAN

SCALE: 1/4"=1'-0"

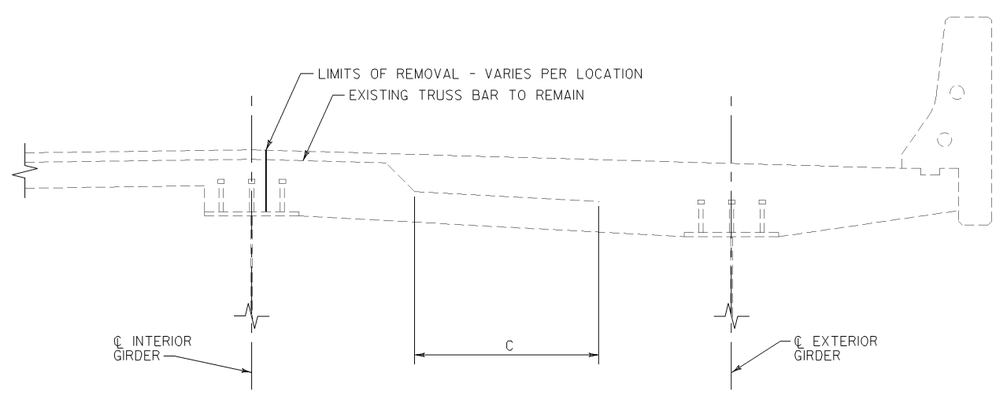

TRUSS BAR DECK REINFORCEMENT TO REMAIN – SECTION

SCALE: 3/4"=1'-0"

LEGEND

REMOVAL LIMITS FOR OH-52

MODIFICATIONS TO EXISTING DECK - SEE DWG. NOS. S-1 THRU S-29

NOTES:

A. ALL EXISTING REINFORCEMENT BARS NOT SHOWN FOR CLARITY.

B. REFERENCE SPECIAL PROVISIONS FOR REMOVAL OF PORTIONS OF EXISTING STRUCTURES FOR ADDITIONAL INFORMATION AND REQUIREMENTS.

DETAIL NOTES:

1. BEFORE REMOVAL OPERATIONS BEGIN, THE OUTLINES OF THE TOP FLANGES OR COVER PLATES OF ALL GIRDERS SHALL BE LOCATED IN ACCORDANCE WITH THE REMOVAL OF PORTIONS OF EXISTING STRUCTURES SPECIAL PROVISION. ONCE THE LOCATION OF THE TOP FLANGE IS CONFIRMED, OFFSET THE OUTLINES OF THE TOP FLANGE 6" AWAY FROM GIRDER TO ESTABLISH THE PAINT LINE.

2. FULL DEPTH SAW CUTTING OF THE EXISTING CONCRETE DECK WILL NOT BE PERMITTED BETWEEN PAINT LINES OVER THE EXISTING GIRDER FLANGES. ONLY 1" DEEP SAW CUT WILL BE PERMITTED BETWEEN PAINT LINES OVER THE EXISTING GIRDER FLANGES.

WR&A
Whitman, Requardt and Associates, LLP
Engineers and Planners
801 S. Caroline Street
Baltimore, Maryland 21231
(410) 235-3450

Maryland Transportation Authority
Engineering Division

ADDENDUMS & REVISIONS			
NO.	DESCRIPTION	BY	DATE
m:\315491O\FT-928\FT-928_Demodetails.dgn			10/28/2009

I-95 FROM MORAVIA ROAD TO THE FORT McHENRY TUNNEL - PHASE 1 - SOUTHBOUND

I-95 (BALTIMORE CITY)

DEMOLITION DETAILS

DESIGNED BY J.T.L. | DRAWN BY W.R.A. | CHECKED BY W.A.G.

CONST. REVIEW BY | DATE DECEMBER 2009 | SCALE AS SHOWN

CONTRACT NO. FT-928-000-006

DRAWING NO. S-48

SHEET NO. 130 OF 188

DRILL HOLES

DRILL HOLES

DRILL HOLES

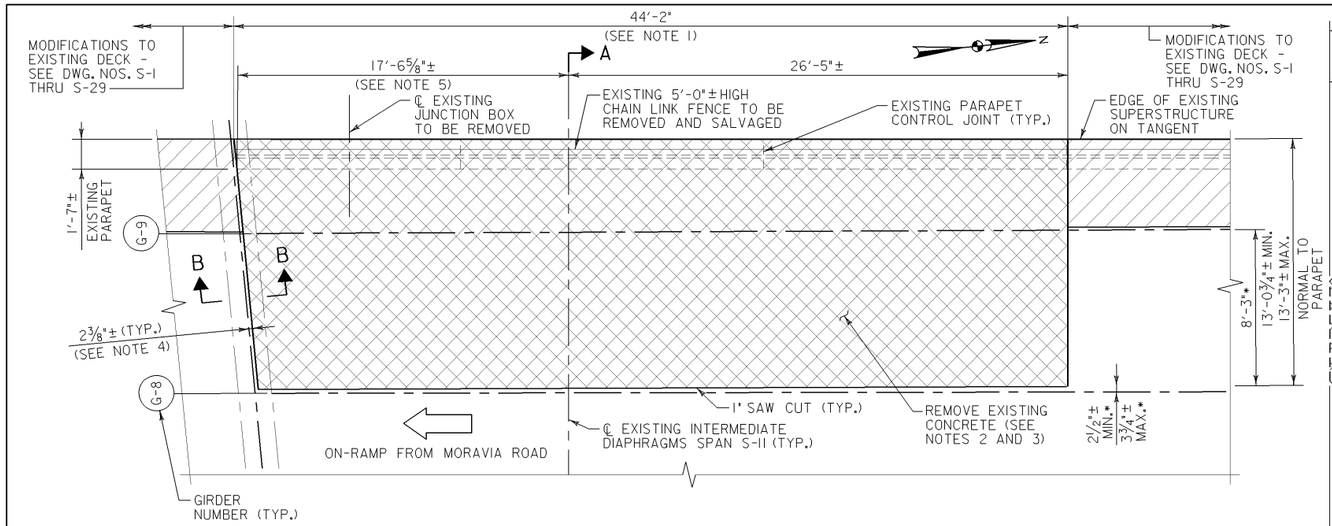

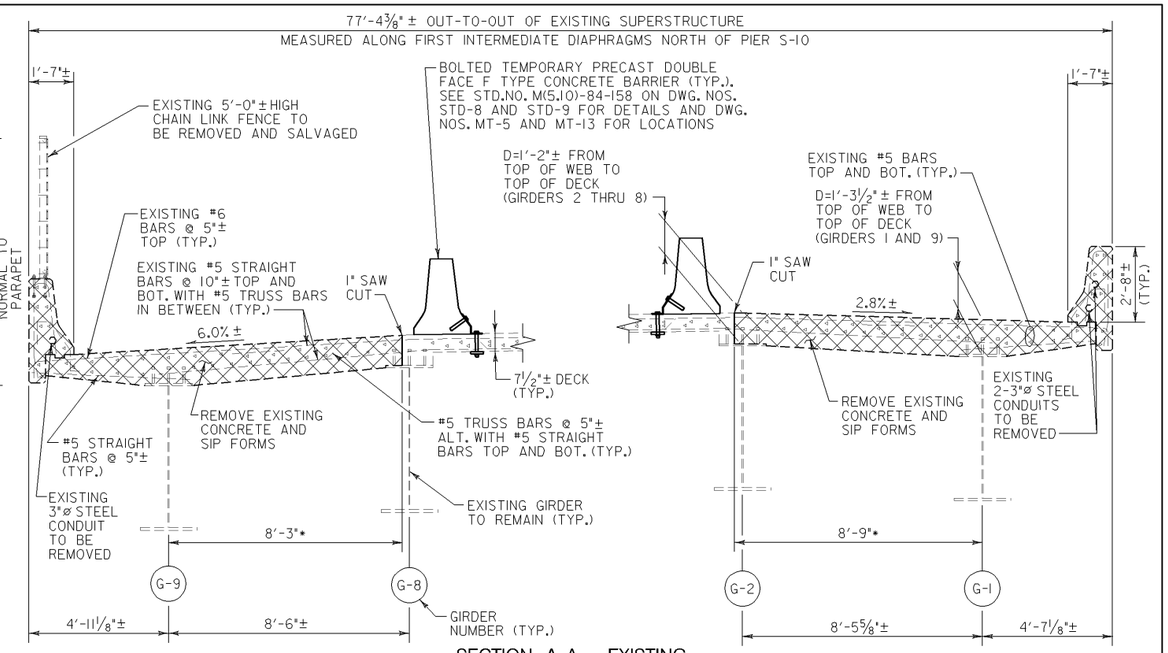

SECTION A–A – EXISTING

SCALE: 3/8"=1'-0"

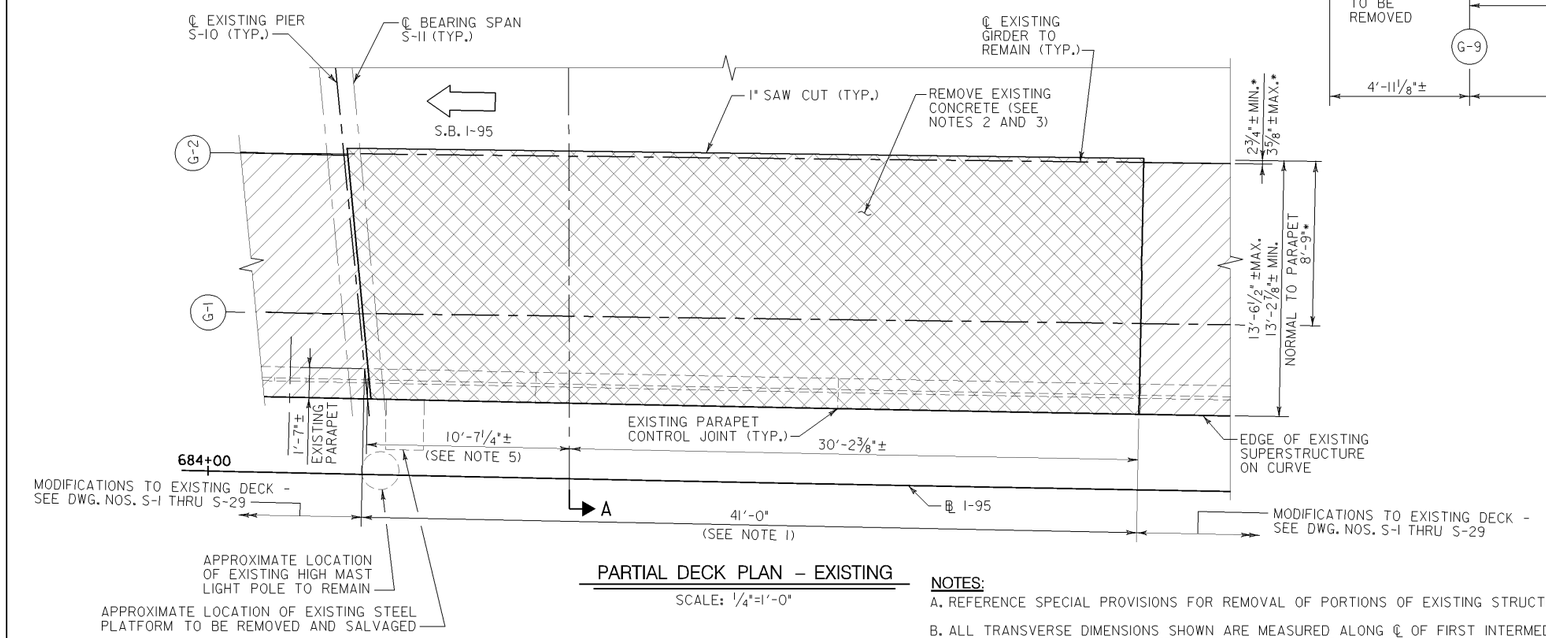

PARTIAL DECK PLAN – EXISTING

SCALE: 1/4"=1'-0"

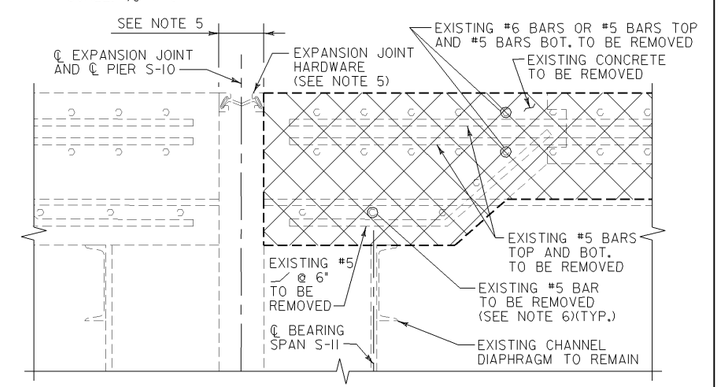

SECTION B–B

SCALE: 1 1/2"=1'-0"

DETAIL NOTES:

1. MEASURED FROM ℄ PIER ALONG FLOW LINE OF EXISTING PARAPET.
2. FOR CONCRETE DECK DEMOLITION DETAIL, SEE DWG. NO. S-48.
3. EXISTING TRANSVERSE AND LONGITUDINAL DECK REINFORCING STEEL BARS SHALL BE CUT IN ACCORDANCE WITH THE DECK DEMOLITION DETAIL SHOWN ON DWG. NO. S-48.
4. ℄ PIER TO EDGE OF ROADWAY JOINT MEASURED PERPENDICULAR TO JOINT OPENING.
5. REFER TO DWG. NO. S-24 FOR INFORMATION REGARDING EXISTING EXPANSION JOINT.
6. A MINIMUM LENGTH OF THE EXISTING #5 TRANSVERSE REINFORCEMENT BARS EQUAL TO 2'-8" MEASURED FROM THE LONGITUDINAL SAW CUT SHALL REMAIN IN THE CONCRETE END DIAPHRAGM TO ACCOMMODATE LAPPING NEW #5 TRANSVERSE REINFORCEMENT BARS.

NOTES:

A. REFERENCE SPECIAL PROVISIONS FOR REMOVAL OF PORTIONS OF EXISTING STRUCTURES FOR ADDITIONAL INFORMATION AND REQUIREMENTS.

B. ALL TRANSVERSE DIMENSIONS SHOWN ARE MEASURED ALONG ℄ OF FIRST INTERMEDIATE DIAPHRAGMS IN SPAN S-11. DIMENSIONS DESIGNATED WITH AN * ARE MEASURED PERPENDICULAR TO EXTERIOR GIRDERS G-1 AND G-9.

C. EXISTING LATERAL BRACING NOT SHOWN FOR CLARITY. REFER TO APPLICABLE DETAILS OF EXISTING PLANS.

D. CROSS SLOPES VARY ALONG LENGTH OF WORK AREA. CROSS SLOPES SHOWN ARE APPROXIMATE AND MEASURED ALONG CENTERLINE OF FIRST INTERMEDIATE DIAPHRAGMS IN SPAN 11.

E. REMOVAL OF THE EXISTING CONCRETE AT GIRDERS G-1 AND G-9 SHALL NOT BE PERFORMED CONCURRENTLY. REFER TO DWG. NOS. MT-5 AND MT-13 FOR EXISTING AND TEMPORARY LANE CONFIGURATIONS.

F. CONTRACTOR SHALL USE CARE WHEN REMOVING THE EXISTING CONCRETE SO AS TO NOT DAMAGE THE EXPANSION JOINT ASSEMBLY. ANY DAMAGE TO THE EXPANSION JOINT ASSEMBLY CAUSED BY THE CONTRACTOR OPERATIONS SHALL BE REPAIRED TO THE SATISFACTION OF THE ENGINEERING DIVISION OF THE AUTHORITY AT THE SOLE EXPENSE OF THE CONTRACTOR.

G. COST OF REMOVING AND SALVAGING THE EXISTING PLATFORM WILL BE INCIDENTAL TO THE CONCRETE PARAPET ITEM.

LEGEND

REMOVAL LIMITS FOR OH-52

MODIFICATIONS TO EXISTING DECK - SEE DWG. NOS. S-1 THRU S-29

REFERENCES	DWG. NO.
GENERAL NOTES	S-47
DEMOLITION DETAILS	S-48
OH-52 - PROPOSED DECK PLAN AND SECTION	S-50
OH-52 - PROPOSED REINFORCEMENT DETAILS	S-51 THRU S-54

WR&A
Whitman, Requardt and Associates, LLP
Engineers and Planners
801 S. Caroline Street
Baltimore, Maryland 21231
(410) 235-3450

Maryland Transportation Authority
Engineering Division

ADDENDUMS & REVISIONS			
NO.	DESCRIPTION	BY	DATE
m:\315491O\FT-928\OH-52\FT-928_OH52_EX.dgn			10/28/2009

I-95 FROM MORAVIA ROAD TO THE FORT McHENRY TUNNEL - PHASE 1 - SOUTHBOUND

I-95 (BALTIMORE CITY)

OH-52 - EXISTING DECK PLAN AND SECTION - REMOVAL LIMITS

DESIGNED BY J.T.L. | DRAWN BY W.R.A. | CHECKED BY W.A.G.
CONST. REVIEW BY | DATE DECEMBER 2009 | SCALE AS SHOWN

CONTRACT NO. FT-928-000-006
DRAWING NO. S-49
SHEET NO. 131 OF 188

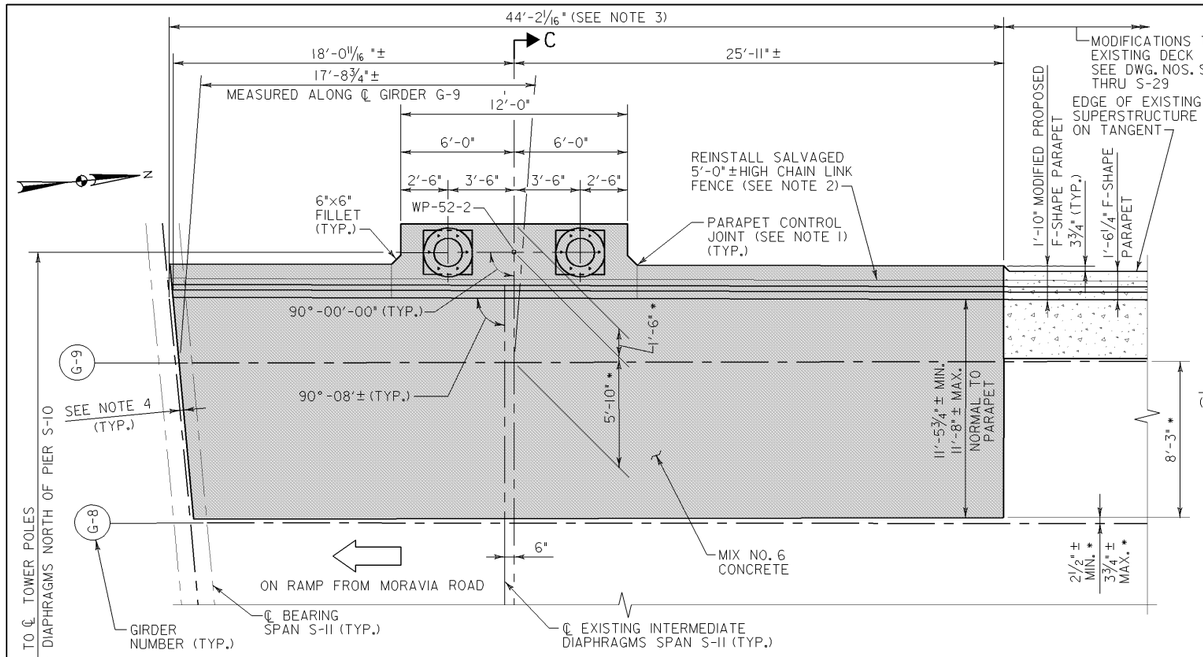

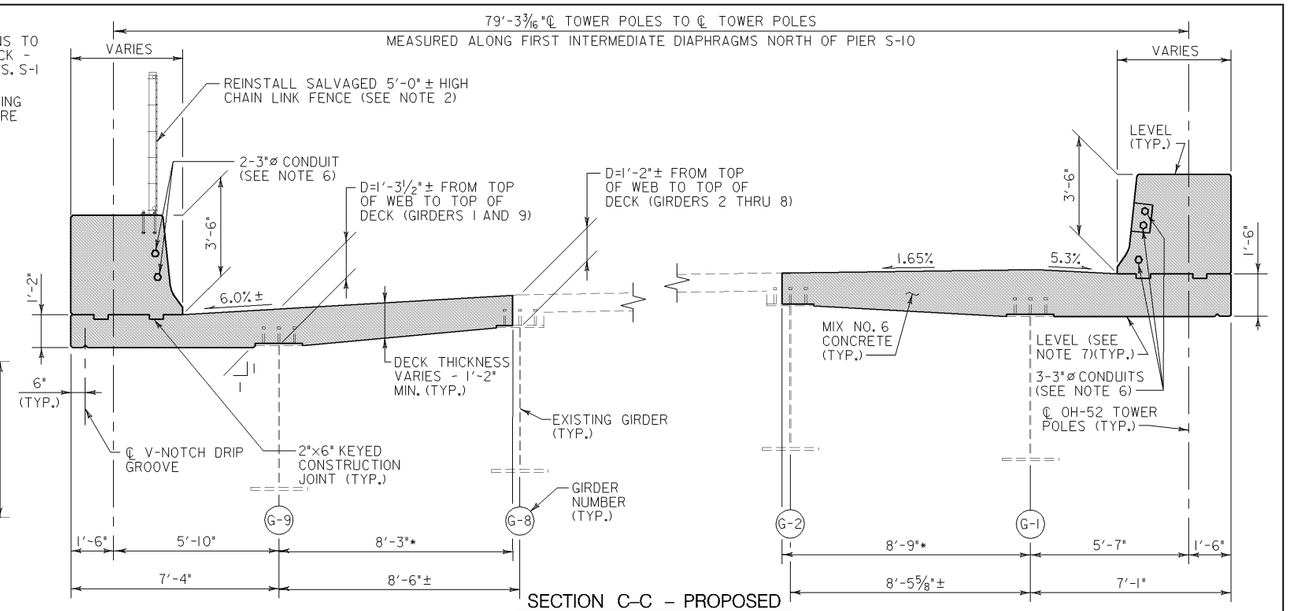

SECTION C–C – PROPOSED

SCALE: 3/8"=1'-0"

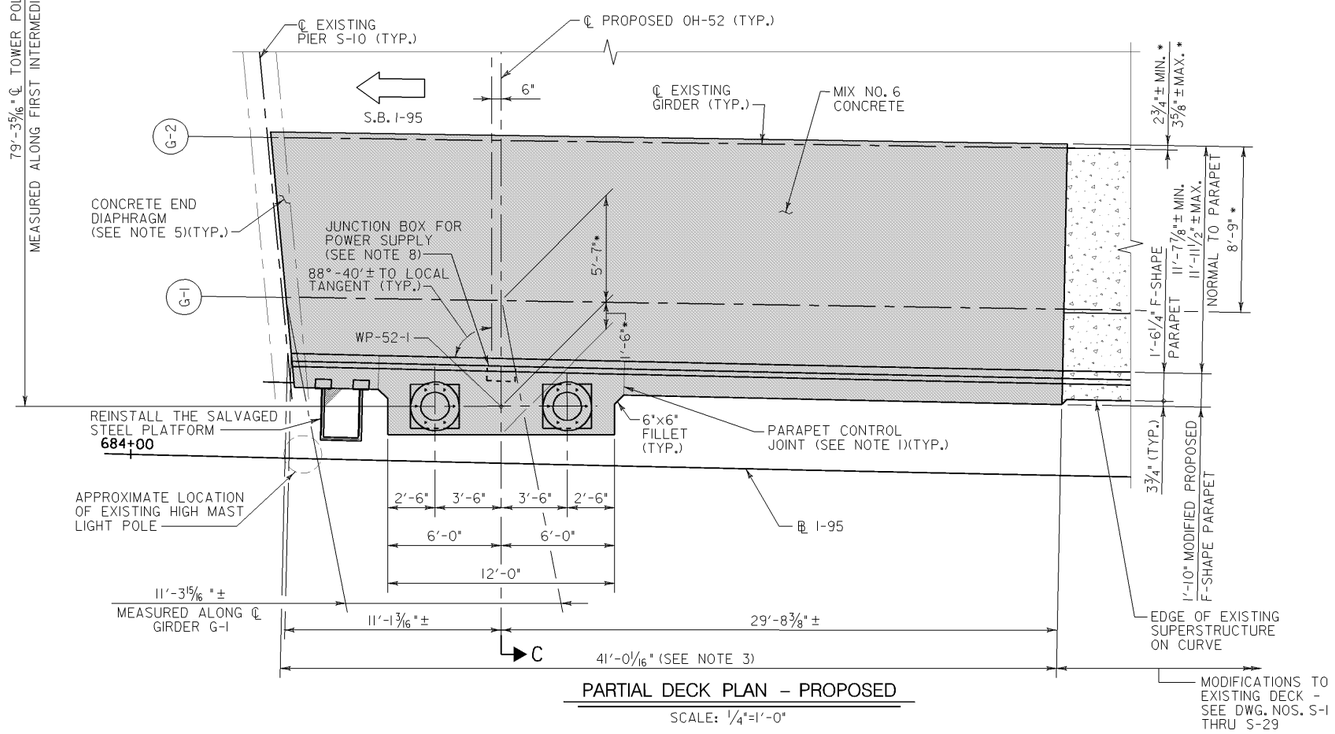

PARTIAL DECK PLAN – PROPOSED

SCALE: 1/4"=1'-0"

DETAIL NOTES:

1. REINFORCEMENT STEEL IN PARAPET SHALL BE CONTINUOUS THROUGH PARAPET CONTROL JOINTS. SEE STD. NO. BR-SS(6.37)-91-247 ON DWG. NO. STD-3 FOR DETAILS.
2. FOR DETAILS OF THE CHAIN LINK FENCE TO BE INSTALLED, SEE DWG. NO. S-58.
3. MEASURED FROM ℄ PIER ALONG FLOW LINE OF F-SHAPE PARAPET.
4. ℄ PIER TO EDGE OF ROADWAY JOINT MEASURED PERPENDICULAR TO OPENING SHALL MATCH EXISTING.
5. CONCRETE END DIAPHRAGM TO BE FORMED TO MATCH EXISTING. REFER TO SHT. NO. S64A OF EXISTING CONTRACT NO. 1996.
6. REFERENCE DWG NO. S-56 FOR LOCATION OF CONDUITS.
7. UNDERSIDE OF DECK OVERHANG TO BE FORMED FLUSH WITH BOTTOM OF TOP FLANGE AT WP-52-1.
8. ONLY ONE JUNCTION BOX SHALL BE INSTALLED IN ORDER TO ACCOMMODATE THE UTILITY FEED TO OH-52. NO OTHERS JUNCTION BOXES SHALL BE INSTALLED IN THE LIMITS OF THE MODIFIED PROPOSED F-SHAPE PARAPET.

NOTES:

A. REFERENCE SPECIAL PROVISIONS FOR NEW SIGN STRUCTURE SUPPORTS FOR ADDITIONAL INFORMATION AND REQUIREMENTS.

B. FOR ADDITIONAL PARAPET GEOMETRY INFORMATION AND DETAILS OF CONDUIT TO BE INSTALLED FOR POWER SUPPLY TO THE SIGN STRUCTURE, SEE DWG. NOS. S-55 AND S-56.

C. S.I.P. FORMS OR TIMBER FORMS ARE PERMITTED TO BE USED TO FORM THE UNDERSIDE OF THE DECK. NO ADDITIONAL COMPENSATION WILL BE ALLOWED FOR WHICHEVER ALTERNATIVE IS SELECTED. SEE STD. NO. BR-SS(6.06)-75-29 ON DWG. NO. STD-15 FOR DETAILS OF THE S.I.P. FORMS.

D. ALL TRANSVERSE DIMENSIONS SHOWN ARE MEASURED ALONG ℄ OF FIRST INTERMEDIATE DIAPHRAGMS IN SPAN 11-S. DIMENSIONS DESIGNATED WITH AN * ARE MEASURED PERPENDICULAR TO EXTERIOR GIRDERS G-1 AND G-9.

E. EXISTING CROSS SLOPES VARY ALONG LENGTH OF WORK AREA. EXISTING CROSS SLOPES SHOWN ARE APPROXIMATE AND MEASURED ALONG ℄ OF FIRST INTERMEDIATE DIAPHRAGM NORTH OF PIER S-10, SPAN S-11.

F. PROPOSED POLE AND ANCHOR BOLTS NOT SHOWN IN SECTION C-C FOR CLARITY.

G. CONSTRUCTION OF THE SIGN STRUCTURE SUPPORTS FOR OH-52 AT GIRDERS G-1 AND G-9 SHALL NOT BE PERFORMED CONCURRENTLY. REFER TO DWG. NOS. MT-5 AND MT-13 FOR EXISTING AND TEMPORARY LANE CONFIGURATIONS.

H. EXISTING LATERAL BRACING NOT SHOWN FOR CLARITY, REFER TO APPLICABLE DETAILS OF EXISTING PLANS.

I. REINFORCEMENT STEEL NOT SHOWN FOR CLARITY.

J. THE COST OF REINSTALLING THE SALVAGED PLATFORM, INCLUDING INSTALLATION OF THE NEW HARDWARE, SHALL BE INCIDENTAL TO THE NEW SIGN STRUCTURE SUPPORT - OH-52 ITEM.

LEGEND

PROPOSED CONSTRUCTION LIMITS INCLUDED UNDER THE NEW SIGN STRUCTURE SUPPORT - OH-52 ITEM

MODIFICATIONS TO EXISTING DECK - SEE DWG. NOS. S-1 THRU S-29

REFERENCES	DWG. NO.
GENERAL NOTES	S-47
OH-52 - EXISTING DECK PLAN AND SECTION - REMOVAL LIMITS	S-49
OH-52 - PROPOSED REINFORCEMENT DETAILS	S-51 THRU S-54

WR&A
Whitman, Requardt and Associates, LLP
Engineers and Planners
801 S. Caroline Street
Baltimore, Maryland 21231
(410) 235-3450

Maryland Transportation Authority
Engineering Division

ADDENDUMS & REVISIONS

NO.	DESCRIPTION	BY	DATE

m:\315491O\FT-928\OH-52\FT-928_OH52_PR.dgn 10/28/2009

I-95 FROM MORAVIA ROAD TO THE FORT McHENRY TUNNEL - PHASE 1 - SOUTHBOUND

I-95 (BALTIMORE CITY)

OH-52 - PROPOSED DECK PLAN AND SECTION

DESIGNED BY J.T.L. | DRAWN BY W.R.A. | CHECKED BY W.A.G.

CONST. REVIEW BY | DATE DECEMBER 2009 | SCALE AS SHOWN

CONTRACT NO. FT-928-000-006

DRAWING NO. S-50

SHEET NO. 132 OF 188

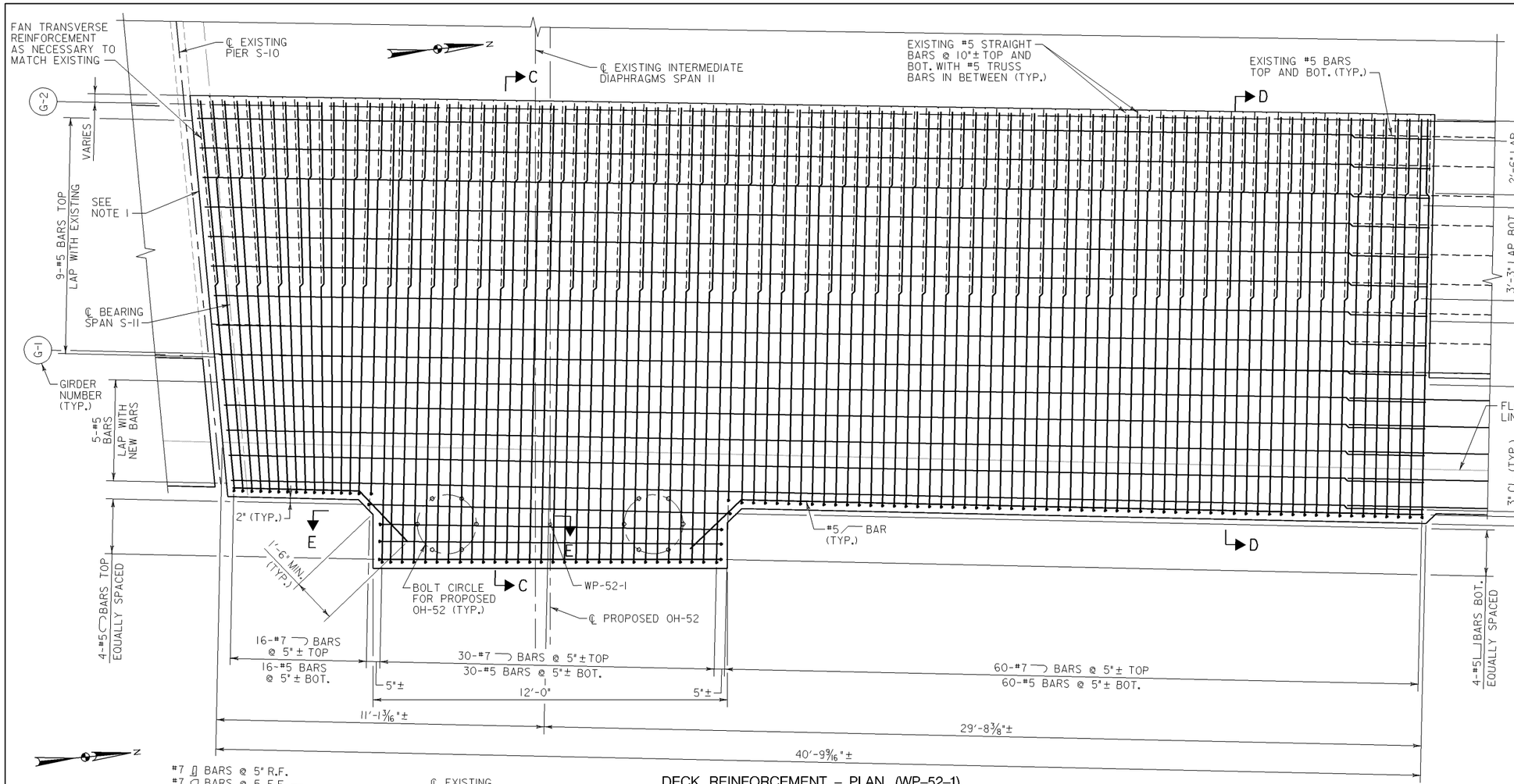

DRILL HOLES

DRILL HOLES

DRILL HOLES

DETAIL NOTES:

1. CONCRETE END DIAPHRAGM STEEL SHALL MATCH EXISTING. FOR ADDITIONAL REINFORCEMENT STEEL AT CONCRETE END DIAPHRAGM, SEE SHT. NO. S-69 OF EXISTING CONTRACT NO. 1996. SEE NOTE 6 ON DWG. NO. S-49.
2. FOR LOCATION OF LAP OF BOTTOM STRAIGHT BARS SEE SECTION C-C AND D-D ON SHEET NO. S-52.
3. FOR PLACEMENT OF REINFORCEMENT STEEL AROUND JUNCTION BOX, SEE DWG. NO. S-57.
4. SEE SHA. STD. NO. BR-SS(6.02)-03-27B ON DWG. NO. STD-2.
5. PARAPET CONTROL JOINT SHALL BE SAW CUT. A PARAFFIN JOINT SHALL NOT BE PERMITTED WITHIN LIMITS OF NEW SIGN SUPPORT STRUCTURE.

DECK REINFORCEMENT – PLAN (WP-52-1)

SCALE: 1/2" = 1'-0"

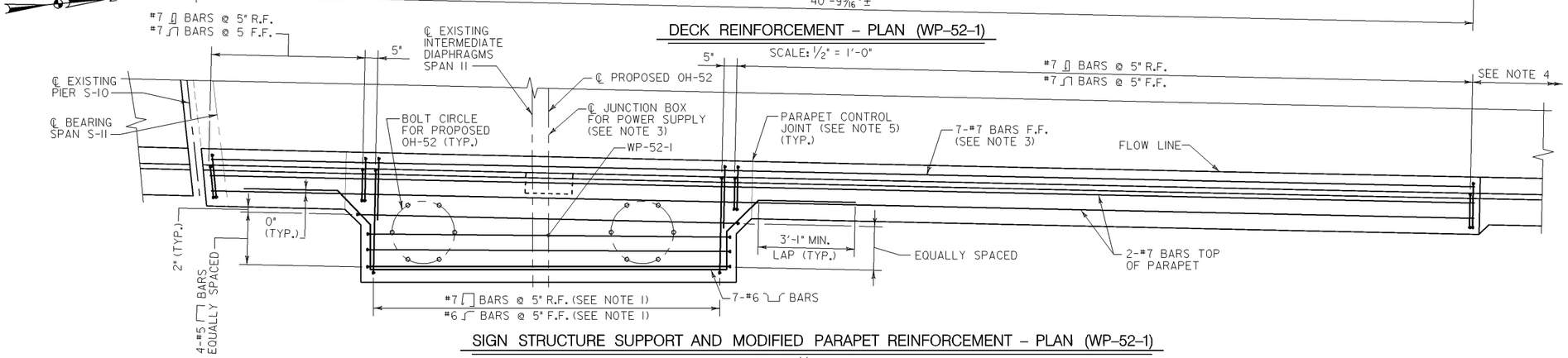

SIGN STRUCTURE SUPPORT AND MODIFIED PARAPET REINFORCEMENT – PLAN (WP-52-1)

SCALE: 1/2" = 1'-0"

NOTES:

A. THE CONTRACTOR SHALL CONTACT THE ENGINEERING DIVISION OF THE AUTHORITY IMMEDIATELY IN THE EVENT A DIFFERENT DECK THICKNESS, REINFORCEMENT PATTERN OR BAR SIZE IS ENCOUNTERED COMPARED TO THAT SHOWN ON THESE AND THE EXISTING PLANS UPON COMPLETION OF THE REMOVAL OF THE CONCRETE DECK. NO ADDITIONAL WORK SHALL PROCEED AT THIS NEW SIGN STRUCTURE SUPPORT UNTIL DIRECTED IN THE EVENT THAT THERE IS A CHANGE IN FIELD CONDITION.

B. ALL EXISTING REINFORCEMENT STEEL LOCATED IN THE DECK THAT SHALL BE INCORPORATED INTO THE PROPOSED CONSTRUCTION, SHALL BE CUT, STRAIGHTENED, CLEANED, AND EPOXY COATED PRIOR TO LAPPING WITH NEW BARS.

C. NO REINFORCEMENT SHALL BE CUT TO AVOID CONFLICTS WITH ANCHOR BOLTS OR CONDUITS IN PARAPETS. BARS SHALL BE SHIFTED TO AVOID ANCHOR BOLTS. CONDUITS SHALL BE SHIFTED TO AVOID REINFORCEMENT.

D. F.F. = FRONT FACE
R.F. = REAR FACE

E. FOR ADDITIONAL PARAPET GEOMETRY INFORMATION AND LOCATION OF PROPOSED JUNCTION BOXES, SEE DWG. NOS. S-55 AND S-56.

F. TOP MAT DECK REINFORCEMENT SHOWN GRAPHICALLY IN 'DECK REINFORCEMENT - PLAN' ONLY. FOR LOCATION OF BOTTOM MAT DECK REINFORCEMENT, SEE SECTIONS C-C AND D-D ON DWG. NO. S-52.

G. THE QUANTITIES FOR THE TRANSVERSE DECK REINFORCEMENT (TOP AND BOTTOM) CONTAIN ONE ADDITIONAL REINFORCEMENT BAR THAN WHAT IS COMPUTED BASED ON DIMENSION AND SPACING TO ACCOUNT FOR UNKNOWN LOCATION OF EXISTING REINFORCEMENT. THE NUMBER OF REINFORCEMENT BARS TO BE PLACED SHALL BE BASED ON THE NUMBER OF EXISTING TRANSVERSE REINFORCEMENT BARS WITHIN THE LIMITS OF REMOVAL.

H. EXISTING HIGH MAST LIGHT POLE AND STEEL PLATFORM NOT SHOWN FOR CLARITY.

I. LONGITUDINAL REINFORCEMENT STEEL IN PARAPET SHALL BE CONTINUOUS THROUGH PARAPET CONTROL JOINT.

WR&A
Whitman, Requardt and Associates, LLP
Engineers and Planners
801 S. Caroline Street
Baltimore, Maryland 21231
(410) 235-3450

Maryland Transportation Authority
Engineering Division

ADDENDUMS & REVISIONS

NO.	DESCRIPTION	BY	DATE

m:\315491O\FT-928\OH-52\FT-928_OH52_PR_EBRACKET.dgn 10/28/2009

I-95 FROM MORAVIA ROAD TO THE FORT McHENRY TUNNEL - PHASE 1 - SOUTHBOUND

I-95 (BALTIMORE CITY)

OH-52 - PROPOSED REINFORCEMENT DETAILS - 1

DESIGNED BY J.T.L.	DRAWN BY W.R.A.	CHECKED BY W.A.G.
CONST. REVIEW BY	DATE DECEMBER 2009	SCALE AS SHOWN

CONTRACT NO. FT-928-000-006

DRAWING NO. S-51

SHEET NO. 133 OF 188

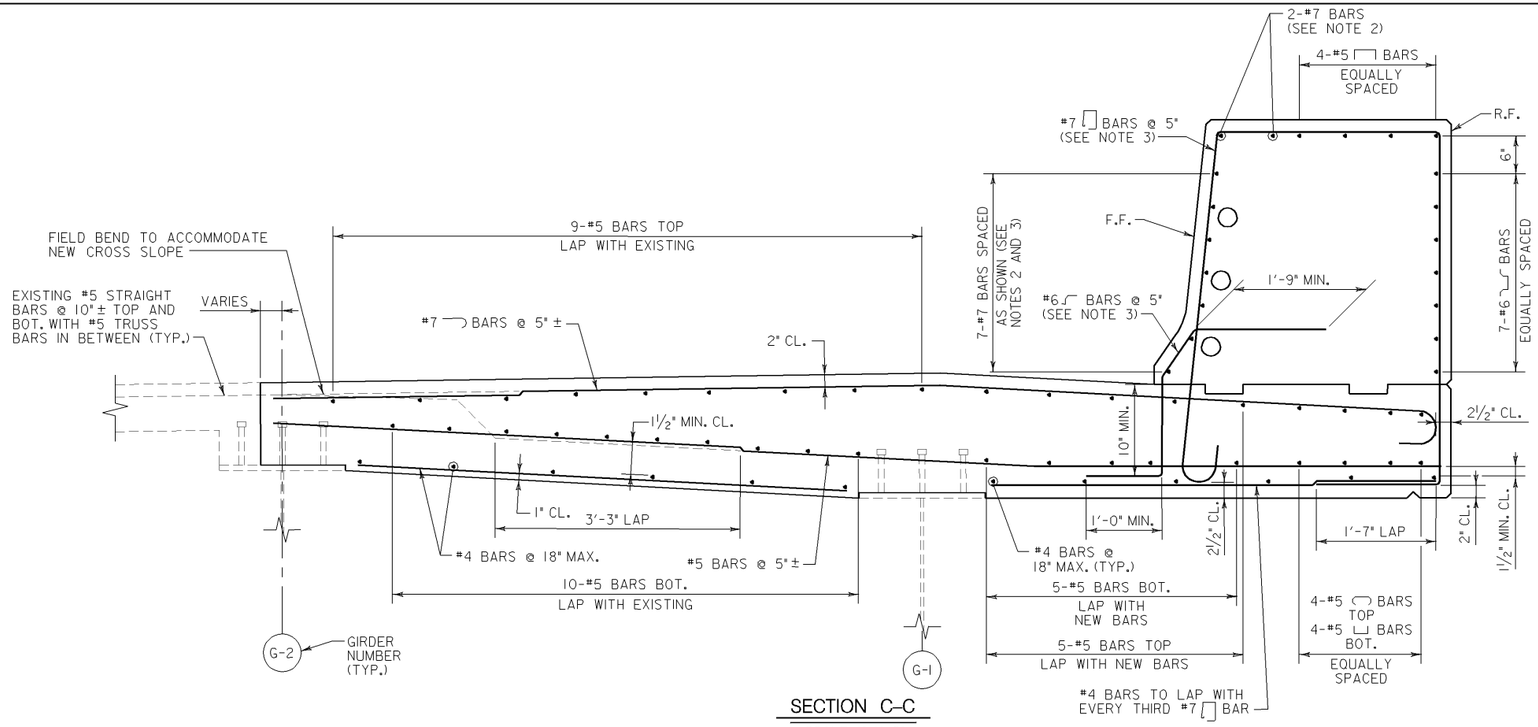

SECTION C–C

SCALE: 1"=1'-0"

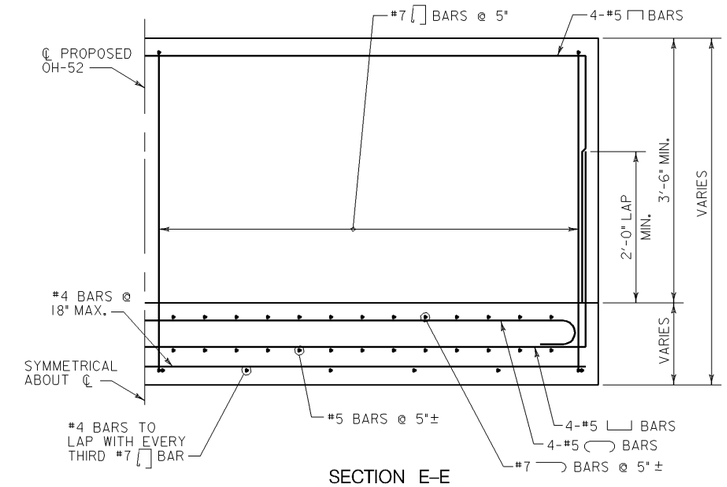

SECTION E–E

SCALE: 1"=1'-0"

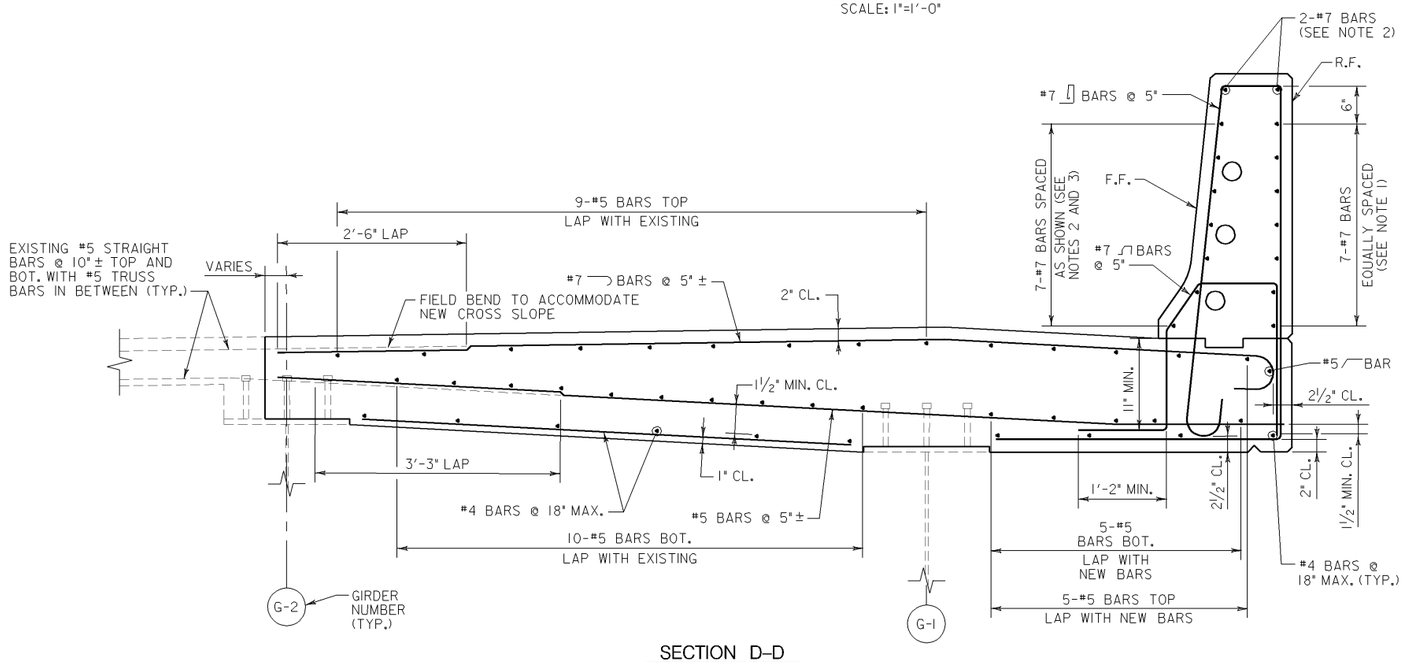

SECTION D–D

SCALE: 1"=1'-0"

DETAIL NOTES:

1. DEVELOP BARS IN REAR FACE OF PARAPET 1'-6" MIN. BEYOND THE 6"x6" FILLET.
2. EXTEND BAR TO LIMITS OF SAW CUT LESS 2" CLEAR DISTANCE.
3. FOR PLACEMENT OF REINFORCEMENT STEEL AROUND JUNCTION BOXES, SEE DWG. NO. S-57.

NOTES:

A. THE CONTRACTOR SHALL CONTACT THE ENGINEERING DIVISION OF THE AUTHORITY IMMEDIATELY IN THE EVENT A DIFFERENT DECK THICKNESS, REINFORCEMENT PATTERN OR BAR SIZE IS ENCOUNTERED COMPARED TO THAT SHOWN ON THESE AND THE EXISTING PLANS UPON COMPLETION OF THE REMOVAL OF THE CONCRETE DECK. NO ADDITIONAL WORK SHALL PROCEED AT THIS NEW SIGN STRUCTURE SUPPORT UNTIL DIRECTED IN THE EVENT THAT THERE IS A CHANGE IN FIELD CONDITION.

B. ALL EXISTING REINFORCEMENT STEEL LOCATED IN THE DECK THAT SHALL BE INCORPORATED INTO THE PROPOSED CONSTRUCTION, SHALL BE CUT, STRAIGHTENED, CLEANED, AND EPOXY COATED PRIOR TO LAPPING WITH NEW BARS.

C. NO REINFORCEMENT SHALL BE CUT TO AVOID CONFLICTS WITH ANCHOR BOLTS OR CONDUITS IN PARAPETS. BARS SHALL BE SHIFTED TO AVOID ANCHOR BOLTS. CONDUITS SHALL BE SHIFTED TO AVOID REINFORCEMENT.

D. F.F. = FRONT FACE
R.F. = REAR FACE

E. FOR ADDITIONAL PARAPET GEOMETRY INFORMATION AND LOCATION OF PROPOSED JUNCTION BOXES, SEE DWG. NOS. S-55 AND S-56.

F. ANCHOR BOLTS FOR PROPOSED SIGN STRUCTURE NOT SHOWN FOR CLARITY.

G. SECTION C-C SHOWN WITH TRUSS BAR. FOR LAYOUT OF STRAIGHT BAR IN AREAS SIMILAR TO SECTION C-C, SEE SECTION D-D.

H. SECTION D-D SHOWN WITH STRAIGHT BAR. FOR LAYOUT OF TRUSS BAR IN AREAS SIMILAR TO SECTION D-D, SEE SECTION C-C.

WR&A
Whitman, Requardt and Associates, LLP
Engineers and Planners
801 S. Caroline Street
Baltimore, Maryland 21231
(410) 235-3450

Maryland Transportation Authority
Engineering Division

ADDENDUMS & REVISIONS

NO.	DESCRIPTION	BY	DATE

m:\315491O\FT-928\OH-52\FT-928_OH52_PR_ESECTIONS.dgn 10/28/2009

I-95 FROM MORAVIA ROAD TO THE FORT McHENRY TUNNEL - PHASE 1 - SOUTHBOUND

I-95 (BALTIMORE CITY)

OH-52 - PROPOSED REINFORCEMENT DETAILS - II

DESIGNED BY J.T.L. | DRAWN BY W.R.A. | CHECKED BY W.A.G.

CONST. REVIEW BY | DATE DECEMBER 2009 | SCALE AS SHOWN

CONTRACT NO. FT-928-000-006

DRAWING NO. S-52

SHEET NO. 134 OF 188

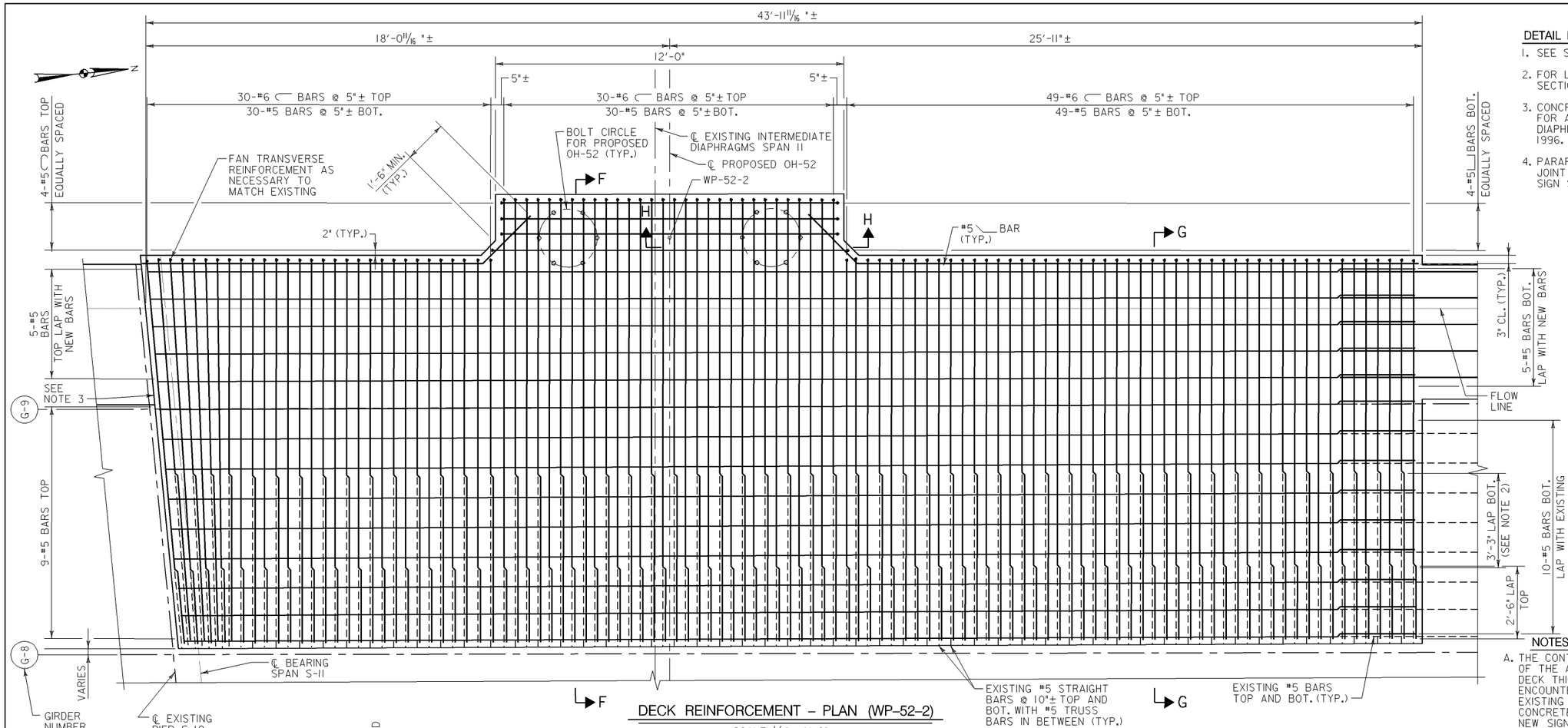

DECK REINFORCEMENT – PLAN (WP-52-2)

SCALE: 1/2" = 1'-0"

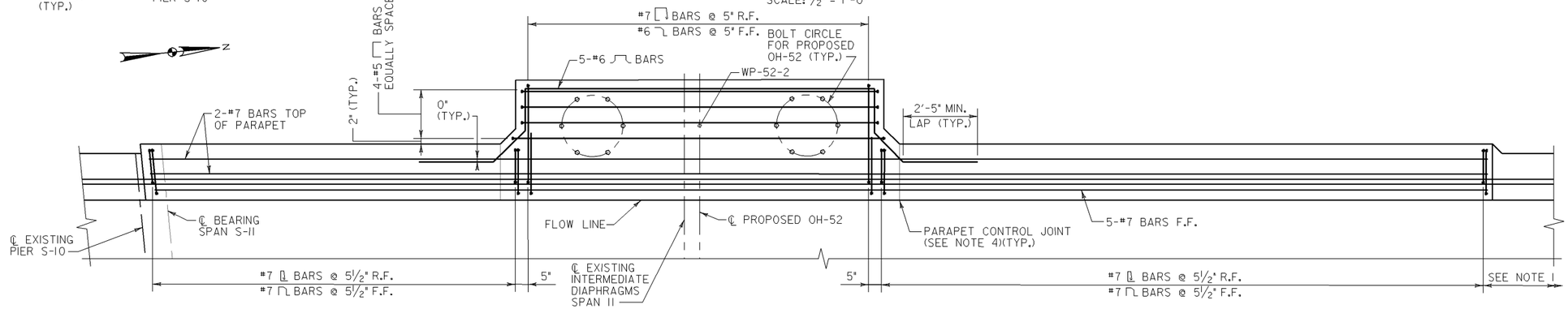

SIGN STRUCTURE SUPPORT AND MODIFIED PARAPET REINFORCEMENT – PLAN (WP-52-2)

SCALE: 1/2" = 1'-0"

DRILL HOLES

DRILL HOLES

DRILL HOLES

DETAIL NOTES:

1. SEE SHA STD. NO. BR-SS(6.02)-03-27B.
2. FOR LOCATION OF LAP OF BOTTOM STRAIGHT BARS SEE SECTION F-F AND G-G ON SHEET NO. S-54.
3. CONCRETE END DIAPHRAGM STEEL SHALL MATCH EXISTING. FOR ADDITIONAL REINFORCEMENT STEEL AT CONCRETE END DIAPHRAGM, SEE SHT. NO. S-69 OF EXISTING CONTRACT NO. 1996. SEE NOTE 6 ON DWG. NO. S-49.
4. PARAPET CONTROL JOINT SHALL BE SAW CUT. A PARAFFIN JOINT SHALL NOT BE PERMITTED WITHIN LIMITS OF NEW SIGN SUPPORT STRUCTURE.

NOTES:

A. THE CONTRACTOR SHALL CONTACT THE ENGINEERING DIVISION OF THE AUTHORITY IMMEDIATELY IN THE EVENT A DIFFERENT DECK THICKNESS, REINFORCEMENT PATTERN OR BAR SIZE IS ENCOUNTERED COMPARED TO THAT SHOWN ON THESE AND THE EXISTING PLANS UPON COMPLETION OF THE REMOVAL OF THE CONCRETE DECK. NO ADDITIONAL WORK SHALL PROCEED AT THIS NEW SIGN STRUCTURE SUPPORT UNTIL DIRECTED IN THE EVENT THAT THERE IS A CHANGE IN FIELD CONDITION.

B. ALL EXISTING REINFORCEMENT STEEL LOCATED IN THE DECK THAT SHALL BE INCORPORATED INTO THE PROPOSED CONSTRUCTION, SHALL BE CUT, STRAIGHTENED, CLEANED, AND EPOXY COATED PRIOR TO LAPPING WITH NEW BARS.

C. NO REINFORCEMENT SHALL BE CUT TO AVOID CONFLICTS WITH ANCHOR BOLTS OR CONDUITS IN PARAPETS. BARS SHALL BE SHIFTED TO AVOID ANCHOR BOLTS. CONDUITS SHALL BE SHIFTED TO AVOID REINFORCEMENT.

D. F.F. = FRONT FACE
R.F. = REAR FACE

E. FOR ADDITIONAL PARAPET GEOMETRY INFORMATION AND LOCATION OF PROPOSED JUNCTION BOXES, SEE DWG. NOS. S-55 AND S-56.

F. TOP MAT DECK REINFORCEMENT SHOWN GRAPHICALLY IN 'DECK REINFORCEMENT - PLAN' ONLY. FOR LOCATION OF BOTTOM MAT DECK REINFORCEMENT, SEE SECTIONS F-F AND G-G ON DWG. NO. S-54.

G. THE QUANTITIES FOR THE TRANSVERSE DECK REINFORCEMENT (TOP AND BOTTOM) CONTAIN ONE ADDITIONAL REINFORCEMENT BAR THAN WHAT IS COMPUTED BASED ON DIMENSION AND SPACING TO ACCOUNT FOR UNKNOWN LOCATION OF EXISTING REINFORCEMENT. THE NUMBER OF REINFORCEMENT BARS TO BE PLACED SHALL BE BASED ON THE NUMBER OF EXISTING TRANSVERSE REINFORCEMENT BARS WITHIN THE LIMITS OF REMOVAL.

H. LONGITUDINAL REINFORCEMENT STEEL IN PARAPET SHALL BE CONTINUOUS THROUGH PARAPET CONTROL JOINT.

WR&A
Whitman, Requardt and Associates, LLP
Engineers and Planners
801 S. Caroline Street
Baltimore, Maryland 21231
(410) 235-3450

Maryland Transportation Authority
Engineering Division

ADDENDUMS & REVISIONS			
NO.	DESCRIPTION	BY	DATE

m:\3154910\FT-928\OH-52\FT-928_OH52_PR_WBRACKET.dgn 10/28/2009

I-95 FROM MORAVIA ROAD TO THE FORT McHENRY TUNNEL - PHASE 1 - SOUTHBOUND

I-95 (BALTIMORE CITY)

OH-52 - PROPOSED REINFORCEMENT DETAILS - III

DESIGNED BY J.T.L.	DRAWN BY W.R.A.	CHECKED BY W.A.G.	
CONST. REVIEW BY	DATE DECEMBER 2009	SCALE AS SHOWN	

CONTRACT NO. FT-928-000-006

DRAWING NO. S-53

SHEET NO. 135 OF 188

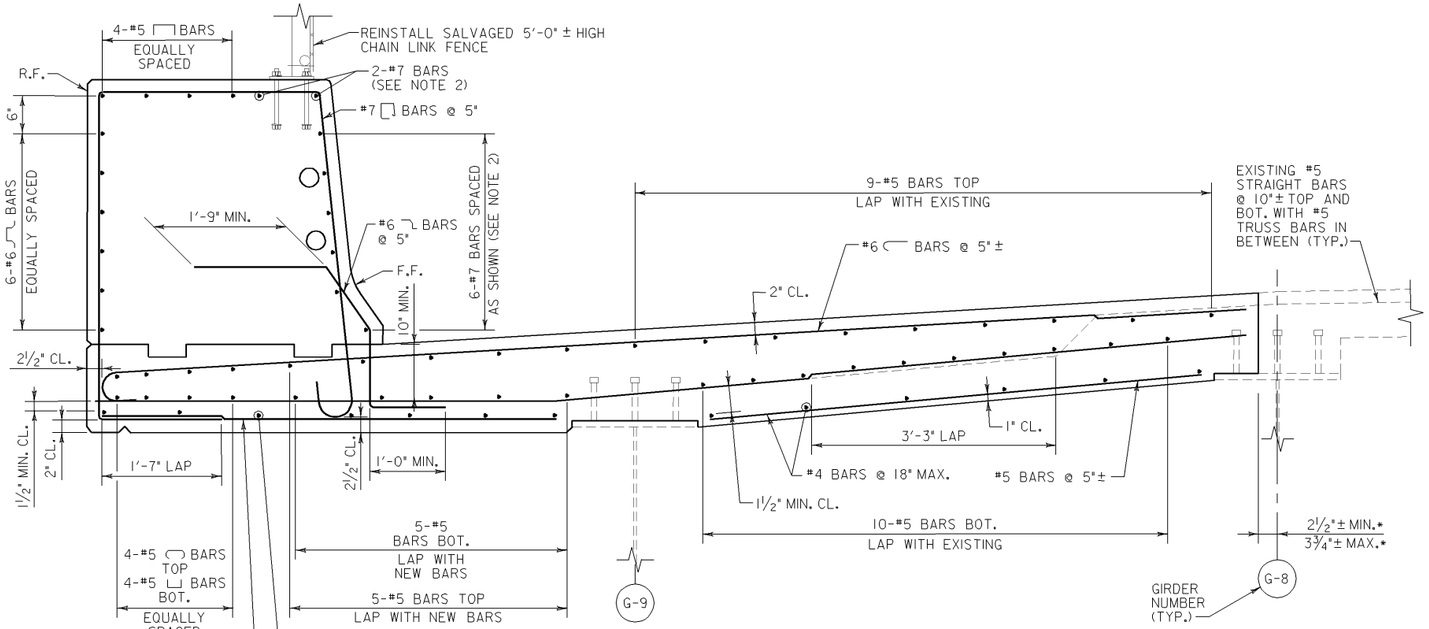

SECTION F–F

SCALE: 1"=1'-0"

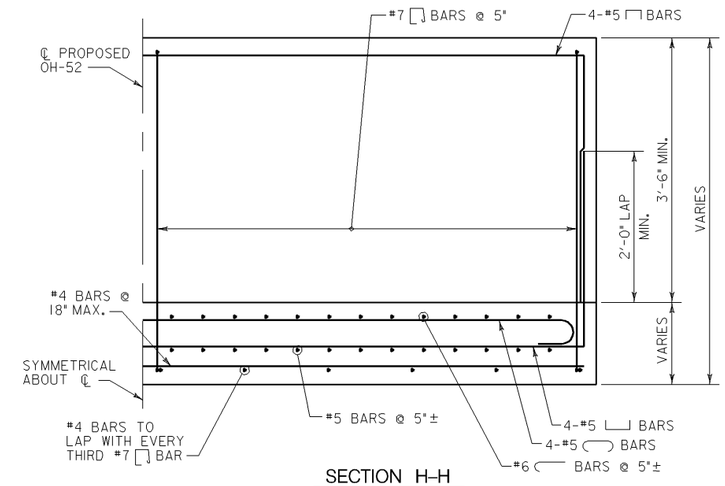

SECTION H–H

SCALE: 1"=1'-0"

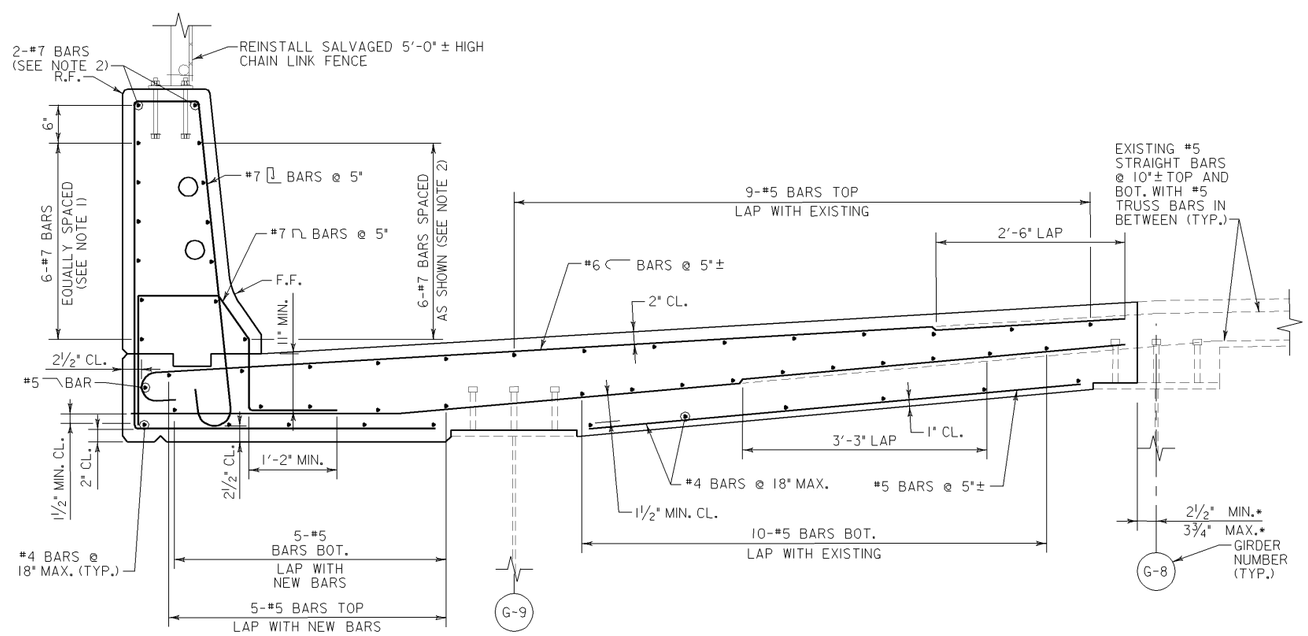

SECTION G–G

SCALE: 1"=1'-0"

DETAIL NOTES:

1. DEVELOP BARS IN REAR FACE OF PARAPET 1'-6" MIN. BEYOND THE 6"×6" FILLET.
2. EXTEND BAR TO LIMITS OF SAW CUT LESS 2" CLEAR DISTANCE.

NOTES:

A. THE CONTRACTOR SHALL CONTACT THE ENGINEERING DIVISION OF THE AUTHORITY IMMEDIATELY IN THE EVENT A DIFFERENT DECK THICKNESS, REINFORCEMENT PATTERN OR BAR SIZE IS ENCOUNTERED COMPARED TO THAT SHOWN ON THESE AND THE EXISTING PLANS UPON COMPLETION OF THE REMOVAL OF THE CONCRETE DECK. NO ADDITIONAL WORK SHALL PROCEED AT THIS NEW SIGN STRUCTURE SUPPORT UNTIL DIRECTED IN THE EVENT THAT THERE IS A CHANGE IN FIELD CONDITION.

B. ALL EXISTING REINFORCEMENT STEEL LOCATED IN THE DECK THAT SHALL BE INCORPORATED INTO THE PROPOSED CONSTRUCTION, SHALL BE CUT, STRAIGHTENED, CLEANED, AND EPOXY COATED PRIOR TO LAPPING WITH NEW BARS.

C. NO REINFORCEMENT SHALL BE CUT TO AVOID CONFLICTS WITH ANCHOR BOLTS OR CONDUITS IN PARAPETS. BARS SHALL BE SHIFTED TO AVOID ANCHOR BOLTS. CONDUITS SHALL BE SHIFTED TO AVOID REINFORCEMENT.

D. F.F. = FRONT FACE
R.F. = REAR FACE

E. FOR ADDITIONAL PARAPET GEOMETRY INFORMATION AND LOCATION OF PROPOSED JUNCTION BOXES, SEE DWG. NOS. S-55 AND S-56

F. ANCHOR BOLTS FOR PROPOSED SIGN STRUCTURE NOT SHOWN FOR CLARITY.

G. SECTION F-F SHOWN WITH TRUSS BAR. FOR LAYOUT OF STRAIGHT BAR IN AREAS SIMILAR TO SECTION F-F, SEE SECTION G-G.

H. SECTION G-G SHOWN WITH STRAIGHT BAR. FOR LAYOUT OF TRUSS BAR IN AREAS SIMILAR TO SECTION G-G, SEE SECTION F-F.

WR&A
Whitman, Requardt and Associates, LLP
Engineers and Planners
801 S. Caroline Street
Baltimore, Maryland 21231
(410) 235-3450

Maryland Transportation Authority
Engineering Division

ADDENDUMS & REVISIONS

NO.	DESCRIPTION	BY	DATE

m:\315490\FT-928\OH-52\FT-928_OH52_PR_WSECTIONS.dgn 10/28/2009

I-95 FROM MORAVIA ROAD TO THE FORT McHENRY TUNNEL - PHASE 1 - SOUTHBOUND

I-95 (BALTIMORE CITY)

OH-52 - PROPOSED REINFORCEMENT DETAILS - IV

DESIGNED BY J.T.L. | DRAWN BY W.R.A. | CHECKED BY W.A.G.
CONST. REVIEW BY | DATE DECEMBER 2009 | SCALE AS SHOWN

CONTRACT NO. FT-928-000-006
DRAWING NO. S-54
SHEET NO. 136 OF 188

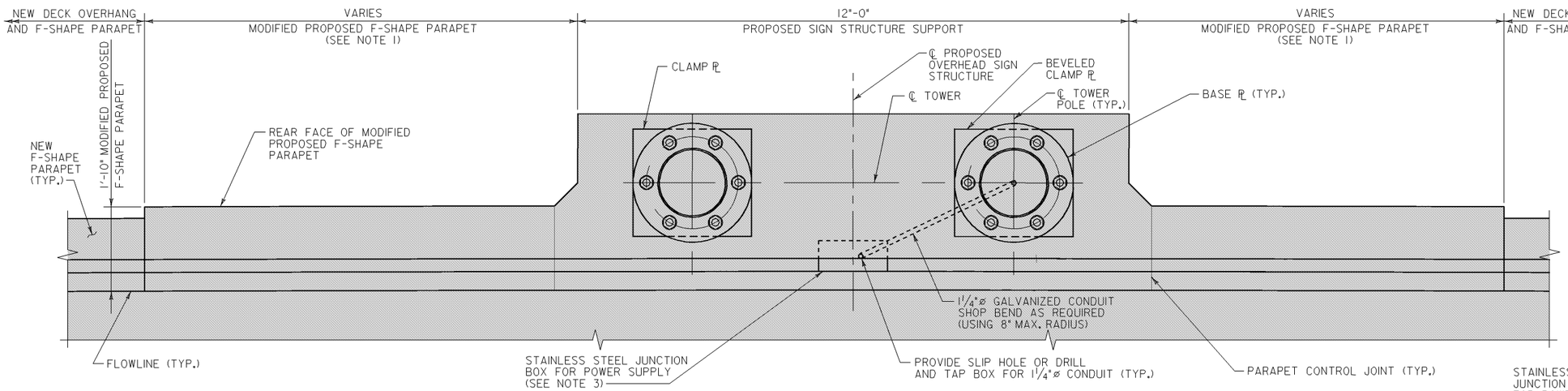

SIGN STRUCTURE SUPPORT DETAILS AT OVERHEAD SPAN SIGN STRUCTURE – PLAN

NOT TO SCALE

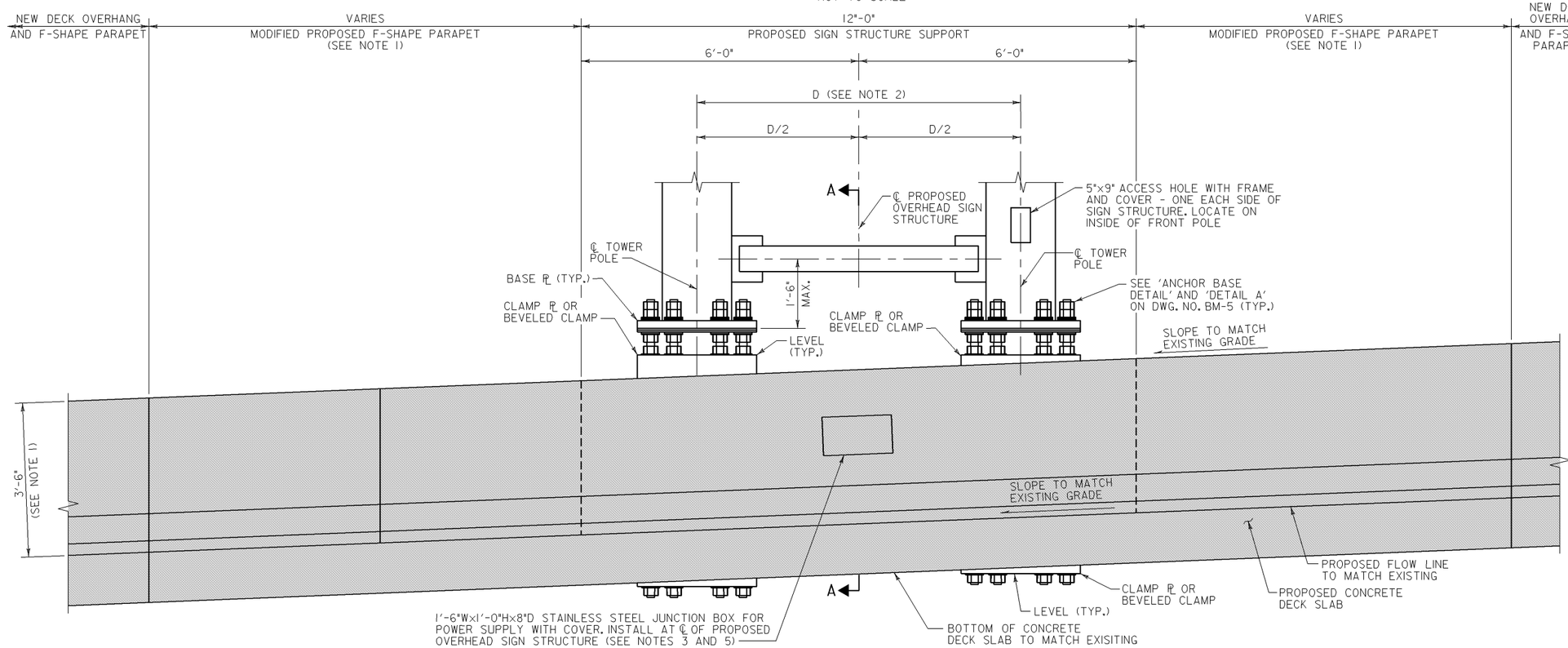

SIGN STRUCTURE SUPPORT DETAILS AT OVERHEAD SPAN SIGN STRUCTURE – ELEVATION

NOT TO SCALE

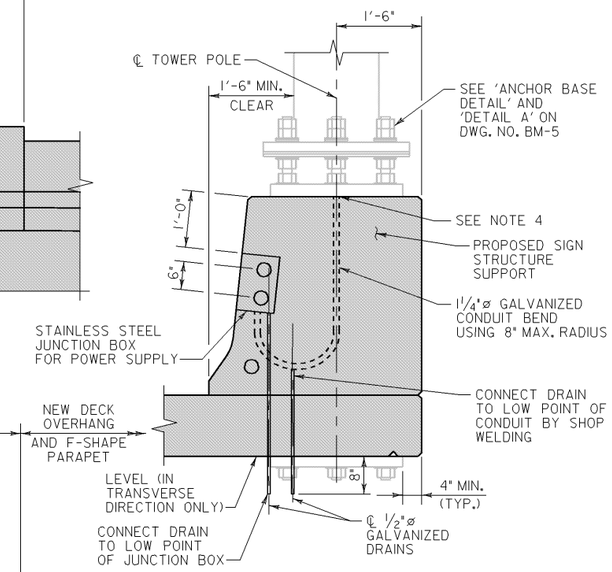

SECTION A–A

NOT TO SCALE

DETAIL NOTES:

1. FOR DETAILS OF MODIFIED PROPOSED F-SHAPE PARAPET, SEE DWG. NO. S-56.
2. FOR DIMENSION "D" REFER TO DWG. NO. BM-4.
3. FOR LOCATION OF JUNCTION BOX AND ORIENTATION OF CONDUITS AT PROPOSED BRIDGE MOUNTED SIGN STRUCTURES, REFER TO THE 'PROPOSED DECK PLAN AND SECTION' FOR THE OH-52 SIGN STRUCTURE LOCATION.
4. EXTEND GALVANIZED CONDUIT 3" ABOVE TOP OF CONCRETE PARAPET.
5. THE MIDDLE CONDUIT SHALL BE TRANSITIONED TO TIE INTO THE JUNCTION BOX AT OH-52 IN CONFORMANCE WITH NEC REQUIREMENTS.

NOTES:

A. PARAPET MOUNTED CHAIN LINK FENCE IS NOT SHOWN FOR CLARITY.

B. REINFORCEMENT STEEL NOT SHOWN FOR CLARITY.

C. PARAPET DETAILS SHOWN FOR ONE SIGN STRUCTURE SUPPORT. SIGN STRUCTURE SUPPORT CARRYING THE OPPOSITE TOWER OF THE SAME SIGN STRUCTURE IS SIMILIAR.

D. NUMBER AND ORIENTATION OF CONDUITS VARIES PER PARAPET LOCATION. REFER TO THE 'PROPOSED DECK PLAN AND SECTION' FOR THE OH-52 SIGN STRUCTURE LOCATION.

E. FOR DETAILS OF BEVELED CLAMP PLATE, SEE DWG. NO. BM-6.

REFERENCES	DWG. NO.
GENERAL NOTES	S-47

WR&A
Whitman, Requardt and Associates, LLP
Engineers and Planners
801 S. Caroline Street
Baltimore, Maryland 21231
(410) 235-3450

Maryland Transportation Authority
Engineering Division

ADDENDUMS & REVISIONS

NO.	DESCRIPTION	BY	DATE

m:\315491O\FT-928\FT-928_bracket_el.dgn 10/28/2009

I-95 FROM MORAVIA ROAD TO THE FORT McHENRY TUNNEL - PHASE 1 - SOUTHBOUND

I-95 (BALTIMORE CITY)

PARAPET GEOMETRICS - OVERHEAD SPAN SIGN STRUCTURES

DESIGNED BY J.T.L. | DRAWN BY W.R.A. | CHECKED BY W.A.G.

CONST. REVIEW BY | DATE DECEMBER 2009 | SCALE AS SHOWN

CONTRACT NO. FT-928-000-006

DRAWING NO. S-55

SHEET NO. 137 OF 188

DRILL HOLES

DRILL HOLES

DRILL HOLES

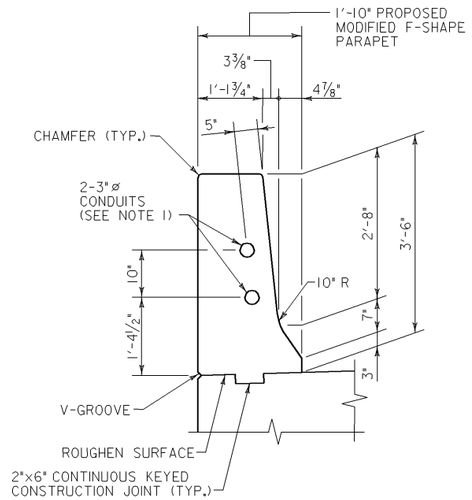

MODIFIED PROPOSED
F-SHAPE PARAPET (2 CONDUITS)

SCALE: 3/4"=1'-0"

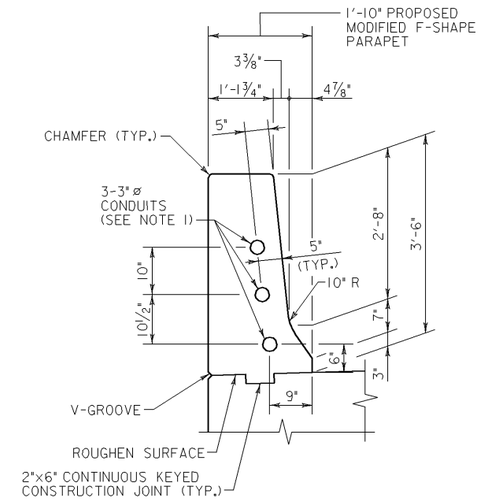

MODIFIED PROPOSED
F-SHAPE PARAPET (3 CONDUITS)

SCALE: 3/4"=1'-0"

DETAIL NOTES:

1. FOR ADDITIONAL INFORMATION AND LOCATION OF 3"ø CONDUITS IN MODIFIED PROPOSED F-SHAPE PARAPETS, REFER TO 'PROPOSED DECK PLAN AND SECTION' FOR THE OH-52 SIGN STRUCTURE LOCATION.

WR&A
Whitman, Requardt and Associates, LLP
Engineers and Planners
801 S. Caroline Street
Baltimore, Maryland 21231
(410) 235-3450

Maryland Transportation Authority
Engineering Division

ADDENDUMS & REVISIONS			
NO.	DESCRIPTION	BY	DATE
m:\315491O\FT-928\FT-928_PARAPET.dgn			10/28/2009

I-95 FROM MORAVIA ROAD TO THE FORT McHENRY TUNNEL - PHASE 1 - SOUTHBOUND

I-95 (BALTIMORE CITY)

MISCELLANEOUS DETAILS

DESIGNED BY J.T.L.	DRAWN BY W.R.A.	CHECKED BY W.A.G.
CONST. REVIEW BY	DATE DECEMBER 2009	SCALE AS SHOWN

CONTRACT NO. FT-928-000-006

DRAWING NO. S-56

SHEET NO. 138 OF 188

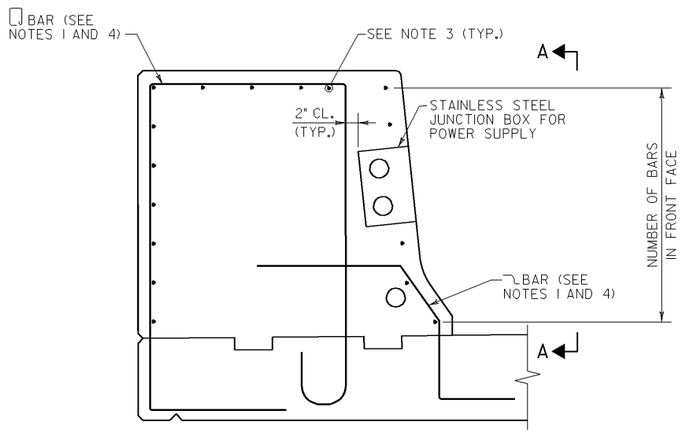

SIGN STRUCTURE SUPPORT – SECTION

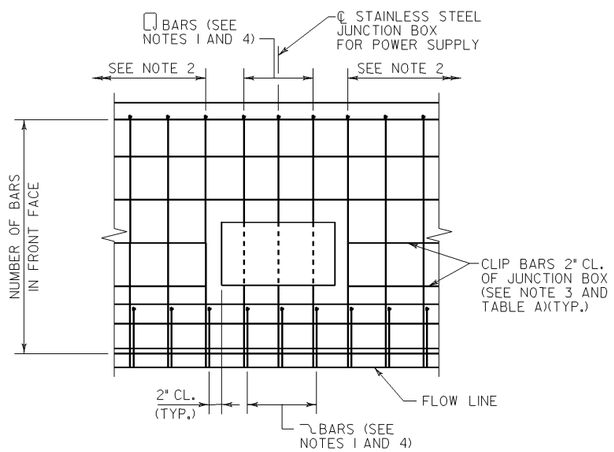

VIEW A–A

JUNCTION BOX FOR POWER SUPPLY – REINFORCEMENT DETAILS

SCALE: 1"=1'-0"

DETAIL NOTES:

1. ⊓ AND ⊓ BAR SIZE AND SPACING SHALL MATCH ⊓ AND ⊓ BAR SIZE AND SPACING SHOWN IN THE REINFORCEMENT DETAILS ON DWG. NO. S-51 AND S-52. QUANTITY OF BARS IS DEPENDENT ON LOCATION OF JUNCTION BOX RELATIVE TO SPACING OF EXISTING REINFORCEMENT IN DECK.
2. SEE THE REINFORCEMENT DETAILS ON DWG. NO. S-51 AND S-52 FOR ⊓ AND ⊓ BAR SIZE AND SPACING.
3. SEE THE REINFORCEMENT DETAILS ON DWG. NO. S-51 AND S-52 FOR LONGITUDINAL BAR SIZE, QUANTITY AND SPACING. REFER TO TABLE A THIS DRAWING FOR THE NUMBER OF FRONT FACE LONGITUDINAL BARS PERMITTED TO BE CLIPPED AT THE LOCATION OF THE JUNCTION BOXES.
4. ALL HOOKS AND DEVELOPMENT LENGTHS SHALL MATCH INFORMATION SHOWN FOR THE PERTINENT SIGN STRUCTURE LOCATION.

TABLE A

NO. BARS IN FRONT FACE	MAX NO. OF BARS TO BE CLIPPED
8	2
7	2

WR&A
Whitman, Requardt and Associates, LLP
Engineers and Planners
801 S. Caroline Street
Baltimore, Maryland 21231
(410) 235-3450

Maryland Transportation Authority
Engineering Division

ADDENDUMS & REVISIONS

NO.	DESCRIPTION	BY	DATE

m:\315490\FT-928\FT-928_junction_box_details.dgn 10/28/2009

I-95 FROM MORAVIA ROAD TO THE FORT McHENRY TUNNEL - PHASE 1 - SOUTHBOUND
I-95 (BALTIMORE CITY)
PARAPET REINFORCEMENT AT JUNCTION BOX

DESIGNED BY J.T.L. | DRAWN BY W.R.A. | CHECKED BY W.A.G.
CONST. REVIEW BY | DATE DECEMBER 2009 | SCALE AS SHOWN

CONTRACT NO. FT-928-000-006
DRAWING NO. S-57
SHEET NO. 139 OF 188

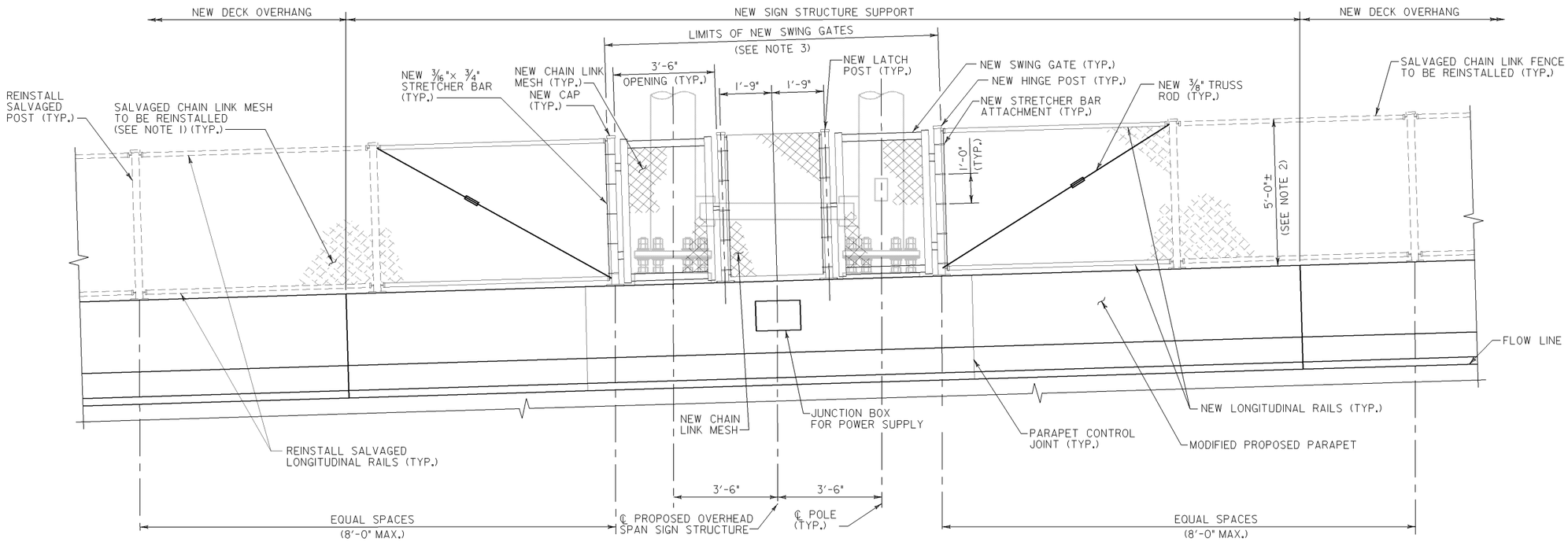

CHAIN LINK FENCE DETAIL AT OVERHEAD SPAN SIGN STRUCTURE – ELEVATION

SCALE: 1/2"=1'-0"

DETAIL NOTES:

1. UPON COMPLETION OF RE-INSTALLING THE FENCE POSTS, THE EXISTING CHAIN LINK MESH SHALL BE CUT TO THE PROPER LENGTH TO TERMINATE AT THE SWING GATEPOSTS, ATTACHED TO THE NEW POSTS AND STRETCHED USING A NEW STRETCHER BAR ATTACHED TO THE SWING GATE POSTS.
2. NEW POSTS SHALL MATCH EXISTING 5'-0"± FENCE HEIGHT.
3. THE SWING GATES SHALL INCLUDE HINGES THAT PERMIT OPENING THE GATE 180 DEGREES TO ONE SIDE, A FORK LATCH AND THE ABILITY TO INSTALL A LOCKING MECHANISM.

NOTES:

A. ALL EXISTING FENCE POSTS AND ANCHORAGE HARDWARE WITHIN THE LIMITS OF REMOVAL SHALL BE REMOVED AND SALVAGED.

B. FOR ADDITIONAL DETAILS AND MATERIAL REQUIREMENTS OF THE CHAIN LINK FENCE, SEE STD. NO. BR-SS(3.03)-05-23 ON DWG. NO. STD-15.

C. HINGE POSTS AND LATCH POSTS SHALL BE 2 7/8" O.D.

D. COLOR AND SIZE OF NEW CHAIN LINK MESH SHALL MATCH EXISTING.

WR&A
Whitman, Requardt and Associates, LLP
Engineers and Planners
801 S. Caroline Street
Baltimore, Maryland 21231
(410) 235-3450

Maryland Transportation Authority
Engineering Division

ADDENDUMS & REVISIONS			
NO.	DESCRIPTION	BY	DATE
m:\315491O\FT-928\FT-928_FENCE.dgn			10/28/2009

I-95 FROM MORAVIA ROAD TO THE FORT McHENRY TUNNEL - PHASE 1 - SOUTHBOUND

I-95 (BALTIMORE CITY)

CHAIN LINK FENCE DETAILS

DESIGNED BY J.T.L.	DRAWN BY W.R.A.	CHECKED BY W.A.G.
CONST. REVIEW BY	DATE DECEMBER 2009	SCALE AS SHOWN

CONTRACT NO. FT-928-000-006

DRAWING NO. S-58

SHEET NO. 140 OF 188

DRILL HOLES

DRILL HOLES

DRILL HOLES

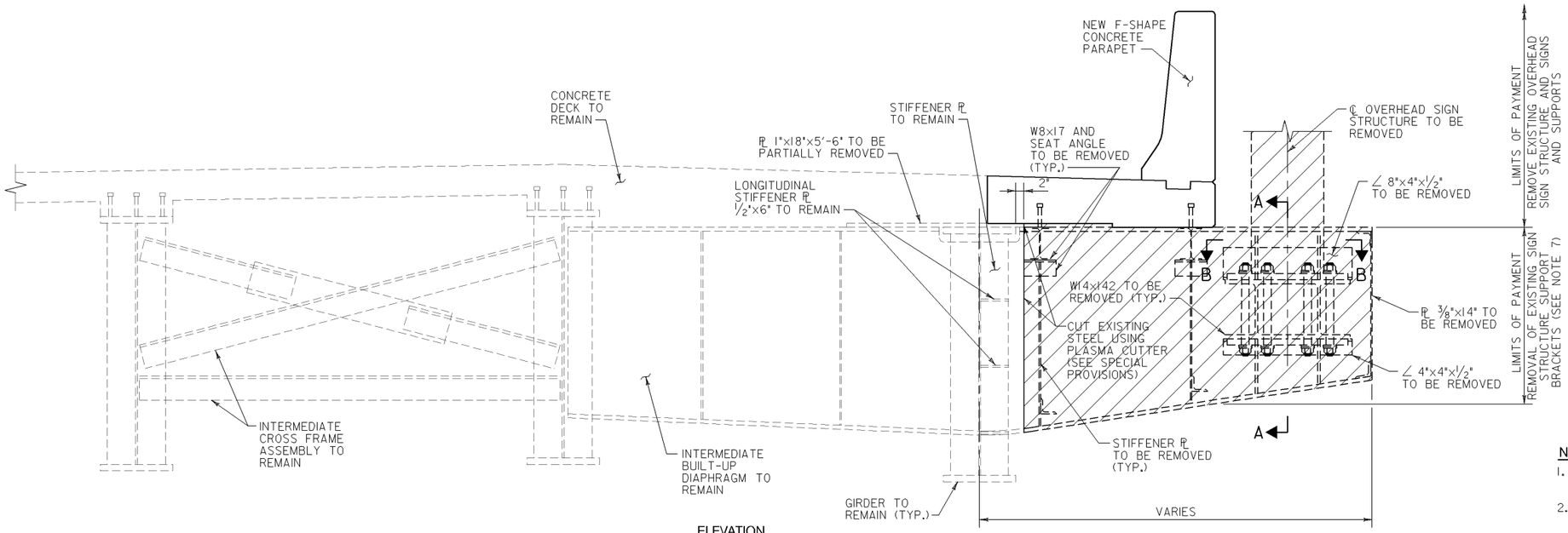

ELEVATION

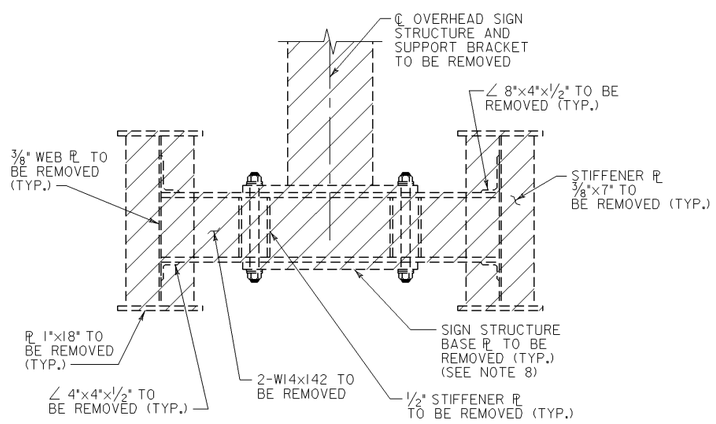

VIEW A–A

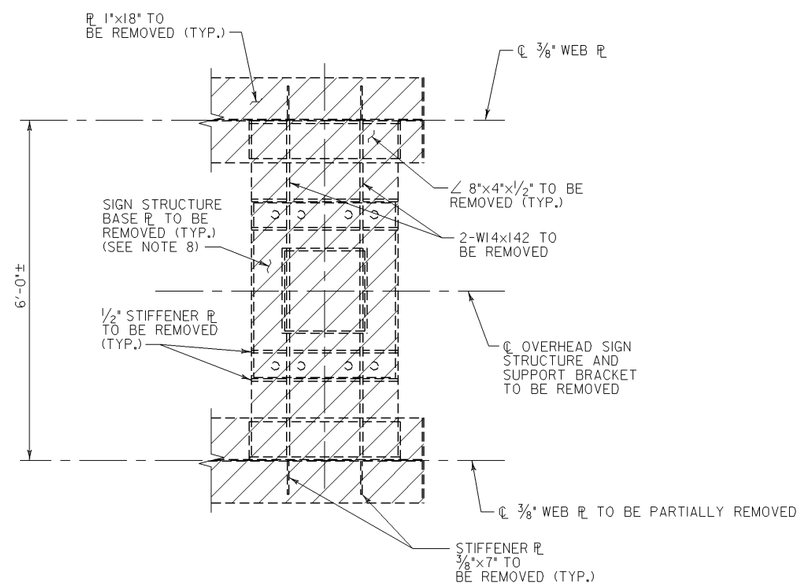

SECTION B–B

REMOVAL OF EXISTING SIGN STRUCTURE SUPPORTS FOR ESS–44 AND ESS–45

SCALE: 3/4"=1'-0"

NOTES:

1. ALL COMPONENTS OF THE EXISTING OVERHEAD SIGN STRUCTURE SUPPORT BRACKET ARE EXISTING AND SHOWN WITH LONG DASHED LINES.
2. LATERAL BRACING IN EXTERIOR BAY OF SUPERSTRUCTURE NOT SHOWN FOR CLARITY.
3. ALL BOLT HOLES IN EXISTING COMPONENTS TO REMAIN SHALL BE FILLED WITH A HIGH STRENGTH BOLT CONFORMING TO A 325, TYPE 3. DIAMETER OF NEW H.S. BOLT SHALL MATCH DIAMETER OF BOLT BEING REMOVED. NEW HIGH STRENGTH BOLTS SHALL BE INSTALLED AS OUTLINED IN 430.03.17.
4. BRACKET REMOVAL DETAILS ARE SHOWN FOR DISPOSITION OF EXISTING COMPONENTS ONLY. FOR ADDITIONAL DETAILS OF THE EXISTING SIGN STRUCTURE BRACKET, REFER TO THE EXISTING PLANS. SEE 'REMOVAL OF EXISTING BRIDGE MOUNTED OVERHEAD SIGN STRUCTURES' TABLE ON DWG. NO. S-47 FOR THE PERTINENT SHEET NUMBER OF THE EXISTING PLANS.
5. SEE DWG. NO. S-47 FOR APPROXIMATE LOCATION OF SIGN STRUCTURE BRACKETS.
6. BRACKET REMOVAL DETAILS SHOWN FOR OUTSIDE SHOULDER LOCATION. BRACKET REMOVAL DETAILS FOR MEDIAN SHOULDER LOCATION SIMILAR.
7. FOR ADDITIONAL INFORMATION REFERENCE SPECIAL PROVISIONS FOR REMOVAL OF EXISTING SIGN STRUCTURE SUPPORT BRACKETS.
8. PAYMENT FOR THE REMOVAL OF THESE ITEMS WILL BE MADE UNDER THE REMOVE EXISTING OVERHEAD SIGN STRUCTURE AND SIGNS AND SUPPORTS ITEM.
9. PAYMENT FOR THE REMOVAL OF THE ANCHOR BOLTS WILL BE MADE UNDER THE REMOVE EXISTING OVERHEAD SIGN STRUCTURE AND SIGNS SUPPORT ITEM.
10. ANCHOR BOLTS CONNECTING THE SIGN BASE PL TO THE SIGN STRUCTURE SUPPORT BRACKET NOT SHOWN IN 'SECTION B-B' FOR CLARITY. NUMBER AND LOCATION OF ANCHOR BOLTS DEPICTED MAY NOT REPRESENT THE FIELD CONDITIONS.

LEGEND

REMOVAL LIMITS

REFERENCES	DWG. NO.
GENERAL NOTES	S-45
SCHEDULE OF NEW AND EXISTING BRIDGE MOUNTED OH SIGN STRUCTURES	S-45

WR&A
Whitman, Requardt and Associates, LLP
Engineers and Planners
801 S. Caroline Street
Baltimore, Maryland 21231
(410) 235-3450

Maryland Transportation Authority
Engineering Division

ADDENDUMS & REVISIONS			
NO.	DESCRIPTION	BY	DATE
m:\315491O\FT-928\FT-928_REMOVAL_I.dgn			10/28/2009

I-95 FROM MORAVIA ROAD TO THE FORT McHENRY TUNNEL - PHASE 1 - SOUTHBOUND

I-95 (BALTIMORE CITY)
REMOVAL OF EXISTING SIGN STRUCTURE SUPPORT BRACKETS

DESIGNED BY J.T.L. | DRAWN BY W.R.A. | CHECKED BY W.A.G.
CONST. REVIEW BY | DATE DECEMBER 2009 | SCALE AS SHOWN

CONTRACT NO. FT-928-000-006
DRAWING NO. S-59
SHEET NO. 141 OF 188

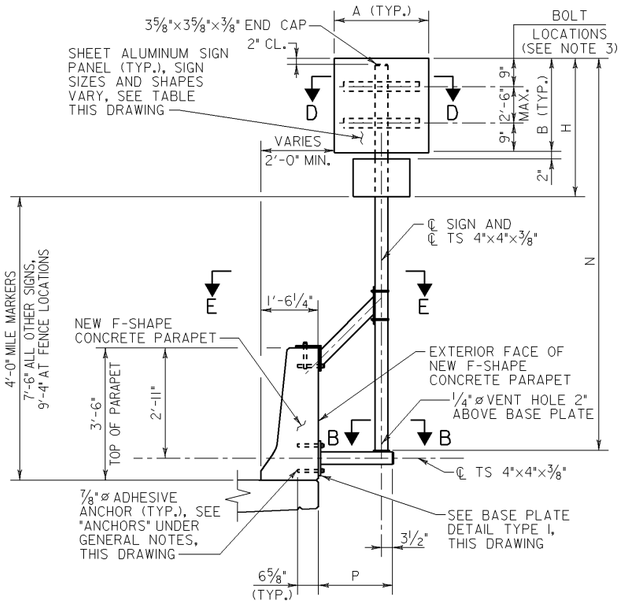

ELEVATION – SIGN SUPPORT TYPE I

SCALE: ½"=1'-0"

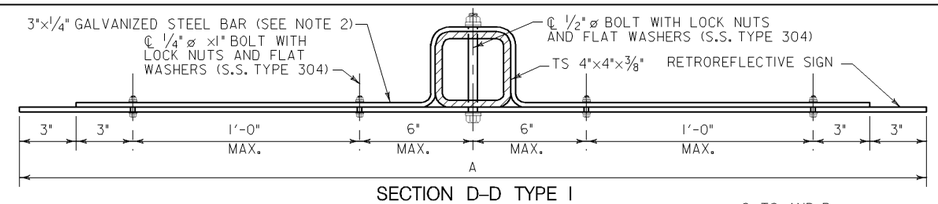

SECTION D–D TYPE I

SCALE: 3"=1'-0"

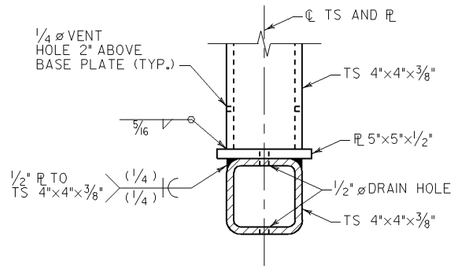

SECTION C–C TYPE I

SCALE: 3"=1'-0"

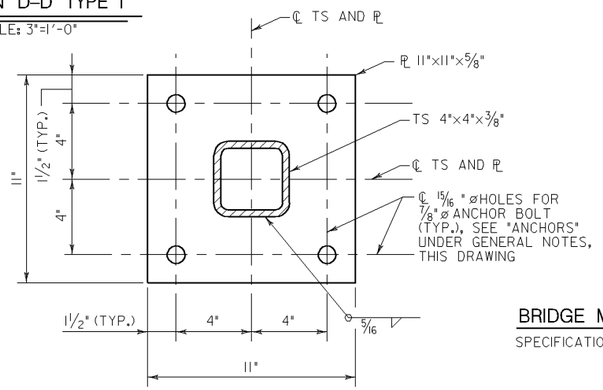

BASE PLATE DETAIL TYPE I

SCALE: 3"=1'-0"

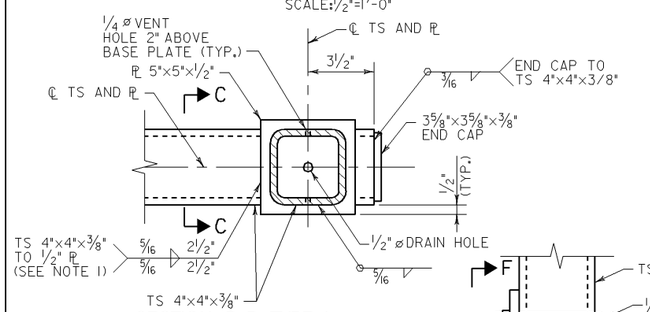

SECTION B–B TYPE I

SCALE: 3"=1'-0"

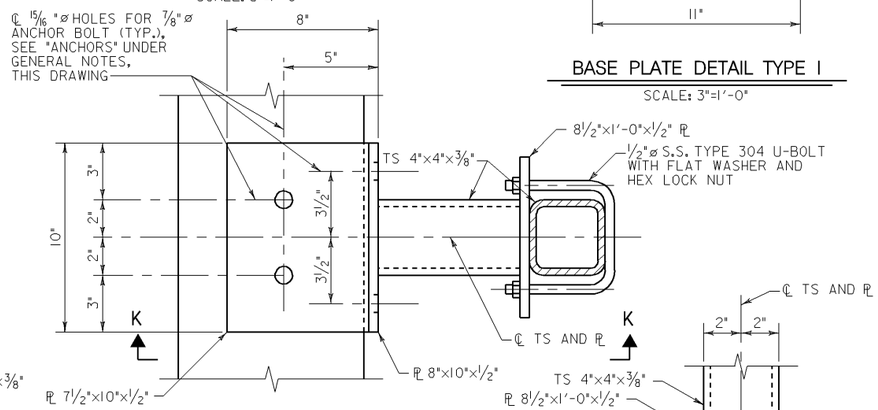

SECTION E–E TYPE I

SCALE: 3"=1'-0"

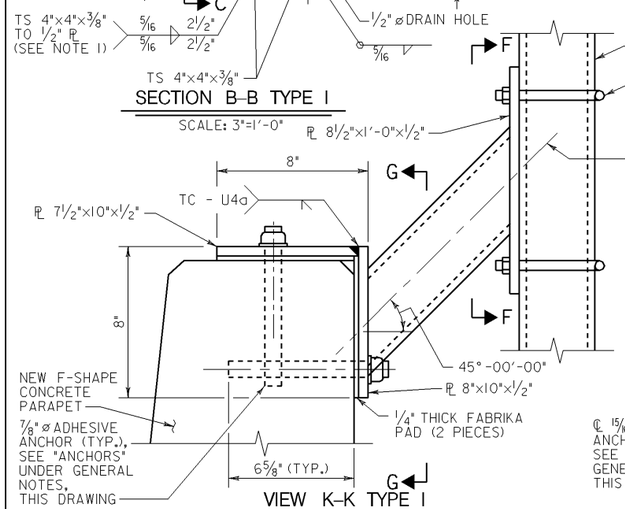

VIEW K–K TYPE I

SCALE: 3"=1'-0"

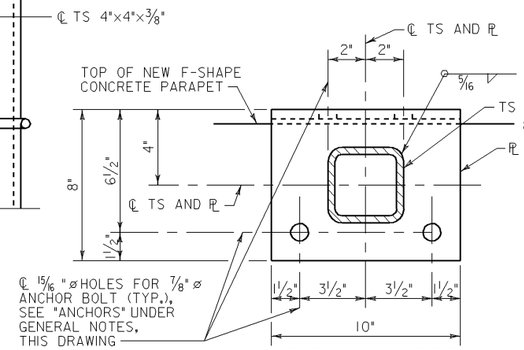

SECTION G–G TYPE I

SCALE: 3"=1'-0"

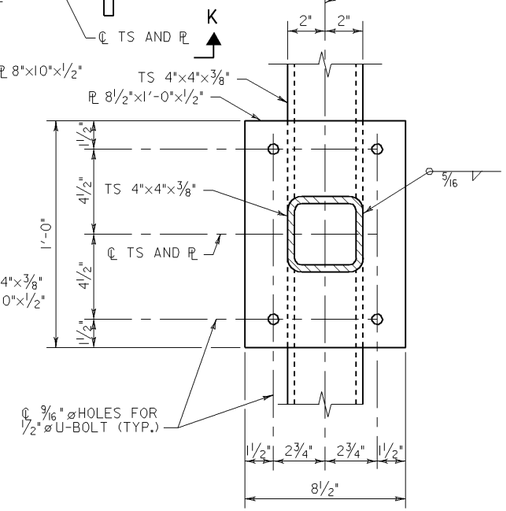

SECTION F–F TYPE I

SCALE: 3"=1'-0"

SIGN SIZE AND SUPPORT DIMENSIONS TABLE										
SUPPORT TYPE	A	B	C	D	E	F	G	H	N	P
1F	30"	15"	-	-	-	-	-	79"	184"	27¼"
	36"	36"	-	-	-	-	-			
	24"	24"	-	-	-	-	-			
1J	48"	60"	-	-	-	-	-	-	149"	33¼"
1K	48"	60"	-	-	-	-	-	-	165"	33¼"
11E*	67⅞"	67⅞"	-	-	-	-	-	-	173"	43¼"

ALL SIGNS RECTANGULAR EXCEPT AS INDICATED BY: * DIAMOND SHAPE

BRIDGE MOUNTED SIGN STRUCTURE GENERAL NOTES

SPECIFICATIONS: -SHA SPECIFICATIONS FOR CONSTRUCTION AND MATERIALS DATED JULY, 2008.
-REVISIONS THEREOF AND ADDITIONS THERETO AND SPECIAL PROVISIONS FOR MATERIALS AND CONSTRUCTION
-AASHTO "STANDARD SPECIFICATIONS FOR STRUCTURAL SUPPORTS FOR HIGHWAY SIGNS, LUMINAIRES, AND TRAFFIC SIGNALS" DATED 2001 INCLUDING ALL INTERIM SPECIFICATIONS THROUGH 2006.

LOADING: BASIC WIND SPEED = 100 MPH

STRUCTURAL STEEL: STRUCTURAL STEEL FOR TUBULAR SECTIONS SHALL CONFORM TO ASTM A500 GRADE B WITH YIELD STRENGTH EQUAL TO 46 KSI. ALL OTHER STEEL SHALL CONFORM TO ASTM A709, GRADE 50. STEEL SHALL BE HOT-DIP GALVANIZED AFTER ASSEMBLY IN CONFORMANCE WITH ASTM A123.

EXISTING STRUCTURE: ALL DIMENSIONS AFFECTED BY THE GEOMETRICS AND/OR LOCATION OF THE EXISTING STRUCTURE SHALL BE CHECKED IN THE FIELD BY THE CONTRACTOR BEFORE ANY CONSTRUCTION IS DONE AND BEFORE AND STRUCTURE STEEL, ETC. IS ORDERED OR FABRICATED. IT SHALL BE THE RESPONSIBILITY OF THE CONTRACTOR TO SUPPLY THE ENGINEER WITH ALL FIELD DIMENSIONS REQUIRED TO CHECK DETAIL DRAWINGS. THE ± MARKS SHOWN WITH DIMENSIONS DO NOT INDICATE ANY DEGREE OF PRECISION. THESE MARKS (±) INDICATE EXISTING DIMENSIONS THAT MAY VARY AND DO REQUIRE FIELD VERIFICATION BY THE CONTRACTOR.

ANCHORS: ANCHORS SHALL BE HILTI HVA ADHESIVE ANCHORS WITH STAINLESS STEEL TYPE 304 HAS THREADED RODS, NUTS AND WASHERS, OR AN APPROVED EQUAL. DIAMETER AND MINIMUM MINIMUM EMBEDMENT SHALL BE AS NOTED FOR HILTI HVA ANCHORS. MINIMUM EMBEDMENT SHALL BE ADJUSTED ACCORDINGLY FOR APPROVED EQUAL ADHESIVE ANCHORS. ADHESIVE ANCHORS SHALL BE INSTALLED IN ACCORDANCE WITH THE MANUFACTURER'S RECOMMENDATIONS. THE CONTRACTOR SHALL HAVE A MANUFACTURER'S REPRESENTATIVE ON SITE DURING THE ADHESIVE ANCHOR INSTALLATION TO ENSURE PROPER PROCEDURES ARE FOLLOWED.

BOLTS: BOLTS, NUTS, AND WASHERS SHALL BE S.S. TYPE 304.

WELDS: WELDING MATERIAL SHALL CONFORM TO AWS D1.1. ELECTRODE MATERIAL SHALL BE E70XX.

SILICONE JOINT SEALER: SILICONE JOINT SEALER SHALL CONFORM TO 911.01.01.

NOTES:

1. 2½" LONG WELD TO BE CENTERED ON TS 4"×4"×⅜". AREAS OF 5"×5"×½" CONNECTION PLATE THAT OVERHANG THE ROUNDED EDGE OF THE TUBULAR SECTION NOT COVERED BY WELD MATERIAL SHALL BE SEALED WITH AN APPROVED SILICONE JOINT SEALER.
2. GALVANIZED STEEL BAR REINFORCEMENT ONLY REQUIRED FOR SIGN PANELS OVER 18" WIDE. FOR BOLT AND STEEL BAR REINFORCEMENT LOCATIONS FOR DIAMOND SHAPED SIGNS, SEE DETAIL 'A' ON DWG. NO. BM-2.

REFERENCE NOTES:

1. FOR BRIDGE MOUNTED SIGN STRUCTURE TABLES SEE DWG. NO. BM-3.
2. FOR TYPE II SIGN SUPPORTS SEE DWG. NO. BM-2.

WR&A
Whitman, Requardt and Associates, LLP
Engineers and Planners
801 S. Caroline Street
Baltimore, Maryland 21231
(410) 235-3450

Maryland Transportation Authority
Engineering Division

ADDENDUMS & REVISIONS			
NO.	DESCRIPTION	BY	DATE

m:\315491O\FT-928\FT-928_TYPE_I.DGN 10/28/2009

I-95 FROM MORAVIA ROAD TO THE FORT McHENRY TUNNEL - PHASE 1 - SOUTHBOUND

I-95 (BALTIMORE CITY)

BRIDGE MOUNTED SIGN SUPPORT - TYPE I

DESIGNED BY J.T.L. | DRAWN BY W.R.A. | CHECKED BY W.A.G.
CONST. REVIEW BY | DATE DECEMBER 2009 | SCALE AS SHOWN

CONTRACT NO. FT-928-000-006
DRAWING NO. BM-1
SHEET NO. 142 OF 188

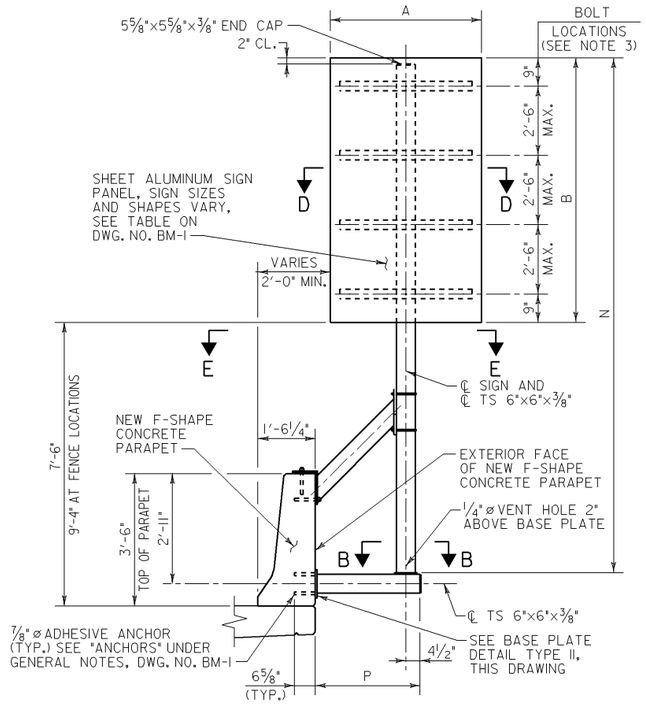

ELEVATION – SIGN SUPPORT TYPE II

SCALE: ½"=1'-0"

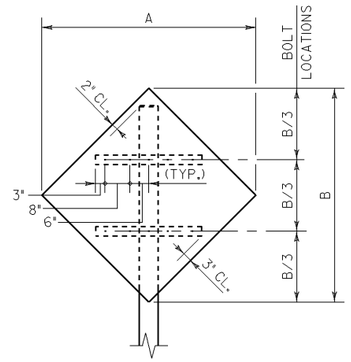

DIAMOND SHAPE

DETAIL 'A'

SCALE: ½"=1'-0"

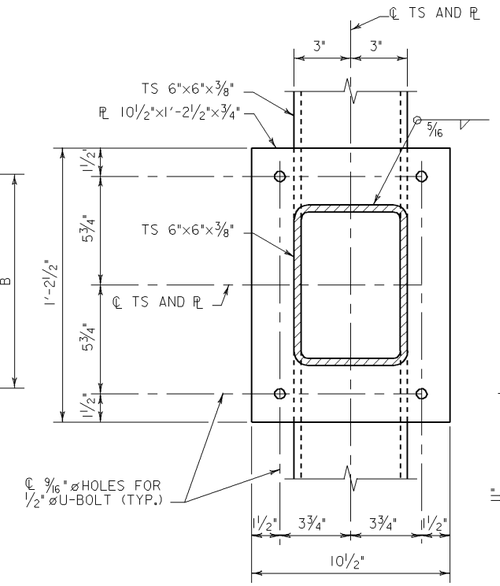

SECTION F–F TYPE II

SCALE: 3"=1'-0"

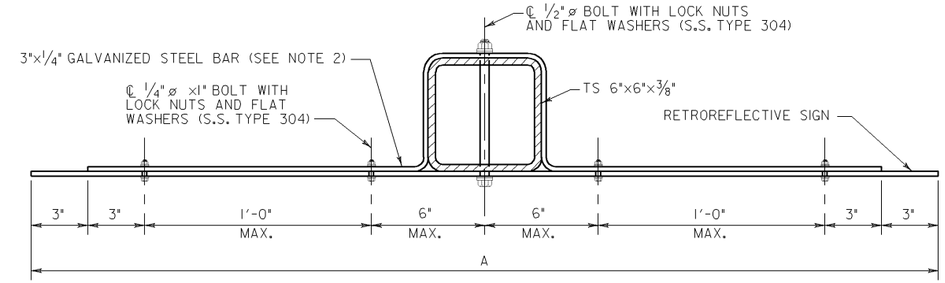

SECTION D–D TYPE II

SCALE: 3"=1'-0"

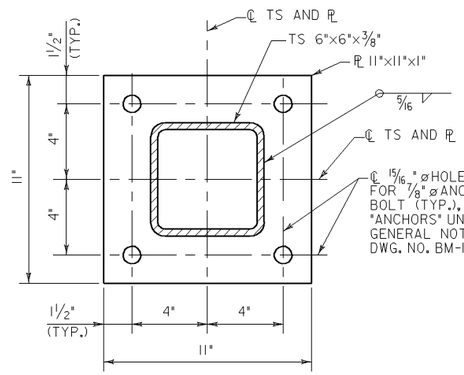

BASE PLATE DETAIL TYPE II

SCALE: 3"=1'-0"

NOTES:

1. 4½" LONG WELD TO BE CENTERED ON TS 6"x6"x⅜". AREAS OF 7"x7"x½" CONNECTION PLATE THAT OVERHANG THE ROUNDED EDGE OF THE TUBULAR SECTION NOT COVERED BY WELD MATERIAL SHALL BE SEALED WITH AN APPROVED SILICONE JOINT SEALER.
2. GALVANIZED STEEL BAR REINFORCEMENT ONLY REQUIRED FOR SIGN PANELS OVER 18" WIDE. FOR BOLT AND STEEL BAR REINFORCEMENT LOCATIONS FOR DIAMOND SHAPED SIGNS, SEE DETAIL 'A' THIS DRAWING.

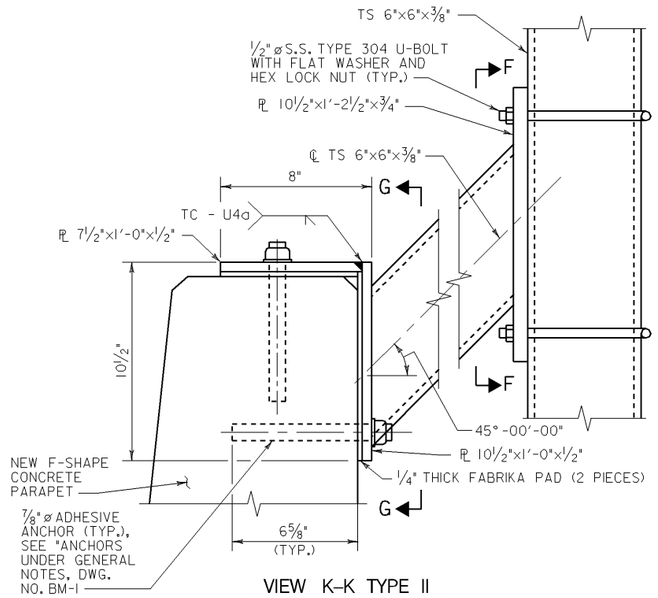

VIEW K–K TYPE II

SCALE: 3"=1'-0"

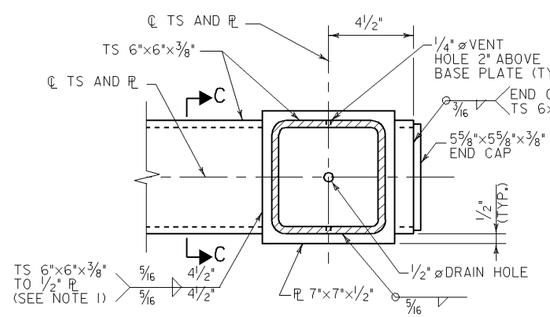

SECTION B–B TYPE II

SCALE: 3"=1'-0"

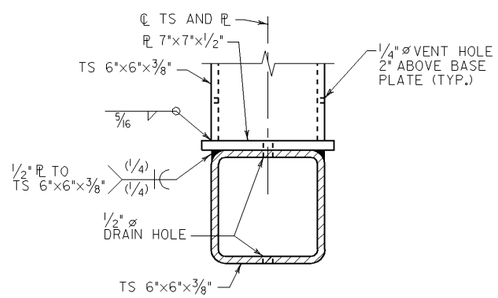

SECTION C–C TYPE II

SCALE: 3"=1'-0"

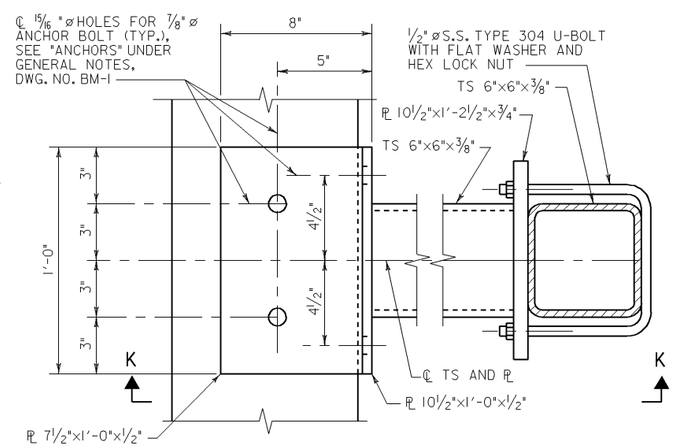

SECTION E–E TYPE II

SCALE: 3"=1'-0"

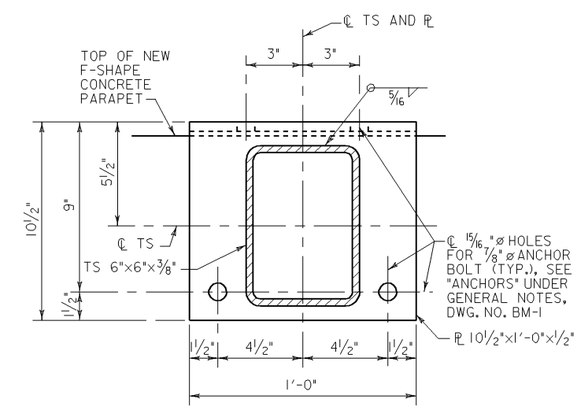

SECTION G–G TYPE II

SCALE: 3"=1'-0"

REFERENCE NOTES:

1. FOR BRIDGE MOUNTED SIGN STRUCTURE NOTES SEE DWG. NO. BM-1.
2. FOR SIGN SIZE AND SUPPORT DIMENSIONS TABLE SEE DWG. NO. BM-1.
3. FOR BRIDGE MOUNTED SIGN STRUCTURE TABLES SEE DWG. NO. BM-3.

WR&A
Whitman, Requardt and Associates, LLP
Engineers and Planners
801 S. Caroline Street
Baltimore, Maryland 21231
(410) 235-3450

Maryland Transportation Authority
Engineering Division

ADDENDUMS & REVISIONS			
NO.	DESCRIPTION	BY	DATE
m:\315491O\FT-928\FT-928_TYPE_II.DGN			10/28/2009

I-95 FROM MORAVIA ROAD TO THE FORT McHENRY TUNNEL - PHASE 1 - SOUTHBOUND

I-95 (BALTIMORE CITY)

BRIDGE MOUNTED SIGN SUPPORT - TYPE II

DESIGNED BY J.T.L.	DRAWN BY W.R.A.	CHECKED BY W.A.G.	
CONST. REVIEW BY	DATE DECEMBER 2009	SCALE AS SHOWN	

CONTRACT NO. FT-928-000-006

DRAWING NO. BM-2

SHEET NO. 143 OF 188

DRILL HOLES

DRILL HOLES

DRILL HOLES

TYPE I – BRIDGE MOUNTED SIGN STRUCTURE TABLE					
DWG. NO.	SIGN DESIGNATION	SIGN TYPE	SIGN SIZE**	SUPPORT TYPE	COMMENTS
SN-2.2	BM-1	I-95 ROUTE SIGN	30x15, 36x36, & 24x24	IF	I-95 SOUTH
SN-2.2	BM-3	SPEED LIMIT	48x60	IJ	I-95 SOUTH
SN-2.2	BM-2	SPEED LIMIT	48x60	IK	I-95 SOUTH

** SIGN SIZE IN INCHES
*** INSTALL SIGN PANELS AS SHOWN ON DWG NO. SN-2.21

TYPE II – BRIDGE MOUNTED SIGN STRUCTURE TABLE					
DWG. NO.	SIGN DESIGNATION	SIGN TYPE	SIGN SIZE**	SUPPORT TYPE	COMMENTS
SN-2.4	BM-4	DIAMOND MERGE	48x48	IIE	I-95 SOUTH
SN-2.4	BM-5	DIAMOND MERGE	48x48	IIE	FROM MORAVIA ROAD

** SIGN SIZE IN INCHES

NOTES:

1. FOR BRIDGE MOUNTED SIGN STRUCTURE NOTES SEE DWG. NO. BM-1.
2. FOR SIGN SIZE AND SUPPORT DIMENSIONS TABLE SEE DWG. NO. BM-1.
3. FOR TYPE I BRIDGE MOUNTED SIGN SUPPORT DETAILS SEE DWG. NO. BM-1.
4. FOR TYPE II BRIDGE MOUNTED SIGN SUPPORT DETAILS SEE DWG. NO. BM-2.

WR&A
Whitman, Requardt and Associates, LLP
Engineers and Planners
801 S. Caroline Street
Baltimore, Maryland 21231
(410) 235-3450

Maryland Transportation Authority
Engineering Division

ADDENDUMS & REVISIONS			
NO.	DESCRIPTION	BY	DATE
m:\315491O\FT-928\FT-928_STRUCT_TABLES.dgn			10/28/2009

I-95 FROM MORAVIA ROAD TO THE FORT McHENRY TUNNEL - PHASE 1 - SOUTHBOUND
I-95 (BALTIMORE CITY)
BRIDGE MOUNTED SIGN STRUCTURE TABLES

DESIGNED BY J.T.L. | DRAWN BY W.R.A. | CHECKED BY W.A.G.
CONST. REVIEW BY | DATE DECEMBER 2009 | SCALE AS SHOWN

CONTRACT NO. FT-928-000-006
DRAWING NO. BM-3
SHEET NO. 144 OF 188

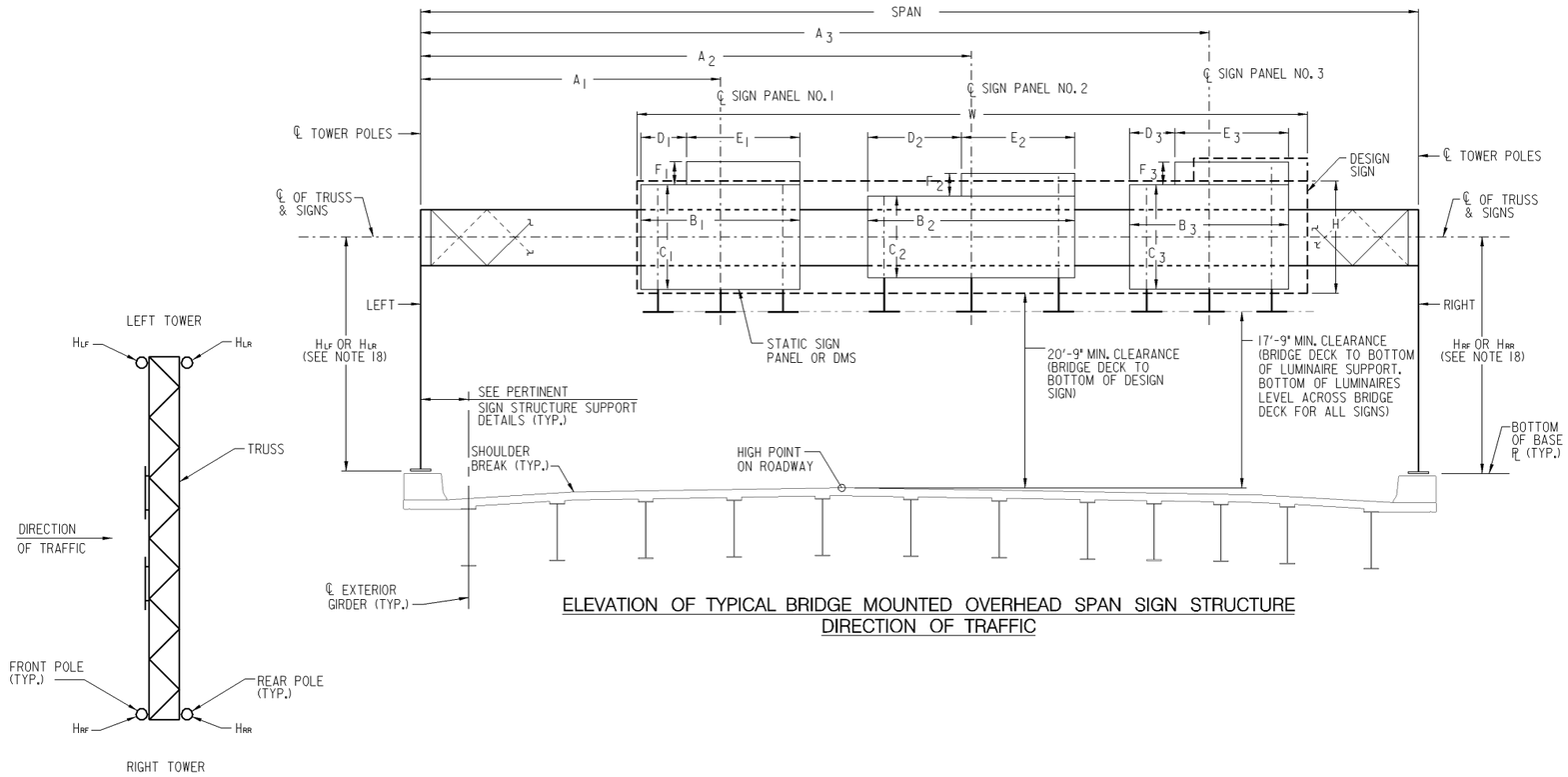

ELEVATION OF TYPICAL BRIDGE MOUNTED OVERHEAD SPAN SIGN STRUCTURE
DIRECTION OF TRAFFIC

PLAN – OVERHEAD SIGN STRUCTURE ORIENTATION
NOT TO SCALE

GENERAL NOTES:

1. REFER TO CONTRACT SPECIFICATIONS AND MD. STANDARD SPECIFICATIONS FOR CONSTRUCTION AND MATERIALS (JULY 2008) FOR MATERIAL, CONSTRUCTION SPECIFICATIONS AND DETAILS.
2. BRIDGE MOUNTED OVERHEAD SPAN SIGN STRUCTURES DESIGNED IN ACCORDANCE WITH AASHTO "STANDARD SPECIFICATIONS FOR STRUCTURAL SUPPORTS FOR HIGHWAY SIGNS, LUMINAIRES, AND TRAFFIC SIGNALS" DATED 2001 INCLUDING ALL INTERIM SPECIFICATIONS THROUGH 2006. EACH SIGN STRUCTURE IS DESIGNED FOR THE FOLLOWING TWO CASES:
   CASE 1: DESIGN SIGN AREA IS CENTERED OVER THE SPAN.
   CASE 2: DESIGN SIGN EDGE PLACED 5'-0" FROM CENTERLINE OF TOWER (WHERE APPLICABLE).
3. ALL STRUCTURAL MAIN TUBES SHALL CONFORM TO API5-LX52.
4. ALL OTHER TUBES SHALL HAVE MINIMUM 30 KSI YIELD STRENGTH AND CONFORM TO A501.
5. ALL STEEL PLATES, WF BEAMS AND MISCELLANEOUS SHAPES SHALL CONFORM TO A709, GRADE 36.
6. ACTUAL STRUCTURE HEIGHT "H" SHALL NOT BE LESS THAN 20'-9" + 1/2 × DESIGN SIGN HEIGHT + ELEVATION DIFFERENCE BETWEEN HIGH POINT OF ROADWAY AND BOTTOM OF BASE PLATE.
7. STEEL TEMPLATES SHALL BE USED TO SET ANCHOR BOLTS PLUMB WHEN POURING THE CONCRETE DECK AND PARAPET. STEEL TEMPLATES SHALL CONTAIN HOLES FOR THE ANCHOR BOLTS 1/16" LARGER THAN THE ANCHOR BOLT DIAMETER.
8. ALL ANCHOR BOLTS SHALL BE PLUMB AFTER CONCRETE DECK AND PARAPET CONSTRUCTION.
9. ALL CONNECTION BOLTS SHALL MEET THE REQUIREMENTS OF ASTM A325 (BOLTS OVER 1 1/2" DIA. ASTM A449), WASHERS F436 AND NUTS A194, GRADE 2 OR 2H. THE BOLTS SHALL HAVE A FLAT WASHER UNDER THE ELEMENT TO BE TURNED.
10. U-BOLTS SHALL CONFORM TO A276 TYPE 304 (STAINLESS STEEL) OR A307. FLAT WASHERS AND HEX LOCK NUTS SHALL BE USED WITH U-BOLTS. REFER TO STANDARD NO. MD 803.02 FOR ADDITIONAL INFORMATION.
11. BASE PLATE SHALL BE IN FULL CONTACT WITH ALL FLAT WASHERS.
12. GROUT SHALL NOT BE PLACED BETWEEN THE BASE PLATE AND TOP OF CONCRETE PARAPET.
13. FOR ADDITIONAL OVERHEAD SPAN SIGN STRUCTURE DETAILS, SEE STANDARD NOS. MD 803.08, 803.08-13, 803.08-14, 803.08-16 AND DWG. NO. BM-5.
14. REFER TO APPROPRIATE 800 SERIES STANDARD PLATE REGARDING MISCELLANEOUS SIGN/LUMINAIRE MOUNTING DETAILS AND ELECTRICAL WIRING DETAILS.
15. TRUSS CAMBER △V SHALL BE INCORPORATED DURING FABRICATION. REFER TO STANDARD NO. MD 803.08 FOR CAMBER DIAGRAM.
16. SIGN STRUCTURE SHALL BE GALVANIZED TO CONFORM TO A123.
17. ALL HARDWARE THAT IS NOT STAINLESS STEEL SHALL BE GALVANIZED TO CONFORM TO A153.
18. TOWER HEIGHT MEASURED AT ℄ OF FRONT AND REAR POLES, SEE PLAN FOR POLE DESIGNATIONS. TOWER HEIGHTS GIVEN IN THE TABLE ON THIS SHEET WERE DETERMINED BASED ON DECK AND PARAPET ELEVATIONS SHOWN ON THE EXISTING CONTRACT PLANS AND THE MINIMUM VERTICAL CLEARANCE TO THE BOTTOM OF THE DESIGN SIGN FOR THE PROPOSED SIGN STRUCTURE LOCATION. THE CONTRACTOR SHALL FIELD VERIFY ALL STRUCTURE ELEVATIONS AND CLEARANCES PRIOR TO FABRICATING THE TOWER POLES.
19. A 3/16" THICK RESILIENT LAMINATED FABRIC PAD CONFORMING TO MIL-C-882E (MILITARY SPECIFICATION) SHALL BE INSTALLED BETWEEN THE EXTRUDED ALUMINUM SIGN PANEL AND THE SIGN SUPPORT W6x12 FOR THE BRIDGE MOUNTED OVERHEAD SIGN STRUCTURES ONLY. THE WIDTH OF THE FABRIC PAD SHALL BE THE SAME SIZE AS THE SIGN SUPPORT FLANGE AND THE HEIGHT OF THE FABRIC PAD SHALL EXTEND THE FULL HEIGHT OF THE SIGN PANEL. THE COST OF FURNISHING AND INSTALLING THE FABRIC PAD SHALL BE INCLUDED IN THE PERTINENT OVERHEAD SIGN STRUCTURE ITEM.

BRIDGE MOUNTED OVERHEAD SPAN SIGN STRUCTURES*

SIGN STRUCTURE NO.	SPAN	SIGN PANEL LOCATIONS																		DESIGN SIGN SIZE W × H **	TOWERS							HORIZONTAL TRUSS			MAXIMUM COMBINED STRESS RATIO		REMARKS
		PANEL NO. 1						PANEL NO. 2						PANEL NO. 3							LEFT POLE		RIGHT POLE										
		A_1	B_1	C_1	D_1	E_1	F_1	A_2	B_2	C_2	D_2	E_2	F_2	A_3	B_3	C_3	D_3	E_3	F_3		H_{LF}	H_{LR}	H_{RF}	H_{RR}	TOWER POLE SIZE	TOWER BRACING TUBE SIZE	D ***	TRUSS CHORD TUBE SIZE	TRUSS CHORD BRACING SIZE	TOTAL CAMBER (△V)	TOWER	TRUSS	
OH-52	79'-3 5/16"	39'-7"	16'-0"	15'-0"	-	-	-	57'-1"	15'-0"	12'-0"	3'-0"	12'-0"	3'-0"	-	-	-	-	-	-	60'-0" (W) x 16'-0" (H)	25'-7 7/8"	25'-10 3/8"	27'-1 13/16"	27'-4 7/16"	18" O.D. x 0.375" THK.	6.625" O.D. x 0.280" THK.	7'-0"	6.625" O.D. x 0.219" THK.	2.375" O.D. x 0.218" THK.	2 1/8"	0.76	0.86	STA. 684 + 19 ±

* FOR LOCATION OF SIGN STRUCTURES, SEE DWG. NO. SN-2.3.
** ADDITIONAL AREA FOR AN EXIT PANEL 12'-0" (W) x 3'-0" (H) HAS BEEN INCLUDED IN THE DESIGN OF ALL STRUCTURAL MEMBERS.
*** FOR LOCATION OF DIMENSION D MEASUREMENT, SEE STANDARD NO. 803.08-13 AND DWG. NO. S-55.

WR&A
Whitman, Requardt and Associates, LLP
Engineers and Planners
801 S. Caroline Street
Baltimore, Maryland 21231
(410) 235-3450

Maryland Transportation Authority
Engineering Division

ADDENDUMS & REVISIONS			
NO.	DESCRIPTION	BY	DATE
m:\315491O\FT-928\FT-928_bm01fmt.DGN			10/28/2009

I-95 FROM MORAVIA ROAD TO THE FORT McHENRY TUNNEL - PHASE 1 - SOUTHBOUND
I-95 (BALTIMORE CITY)
BRIDGE MOUNTED OVERHEAD SPAN SIGN STRUCTURES

DESIGNED BY J.T.L. | DRAWN BY W.R.A. | CHECKED BY W.A.G.
CONST. REVIEW BY | DATE DECEMBER 2009 | SCALE AS SHOWN

CONTRACT NO. FT-928-000-006
DRAWING NO. BM-4
SHEET NO. 145 OF 188

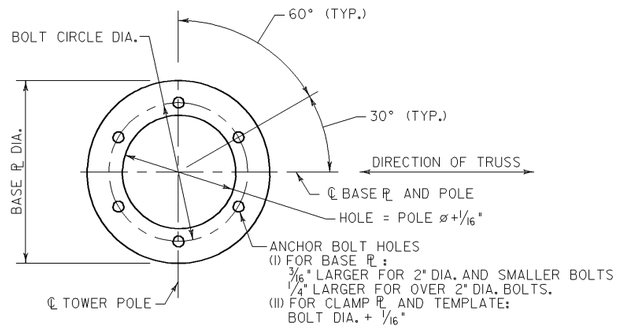

PLAN – BASE PLATE 6 BOLT PATTERN

SCALE: 1"=1'-0"

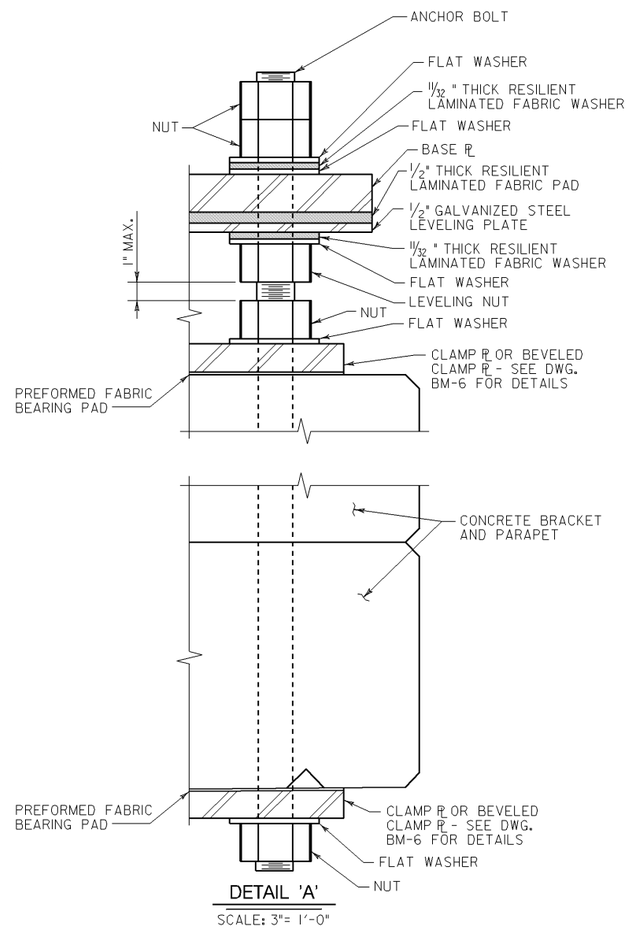

DETAIL 'A'

SCALE: 3"= 1'-0"

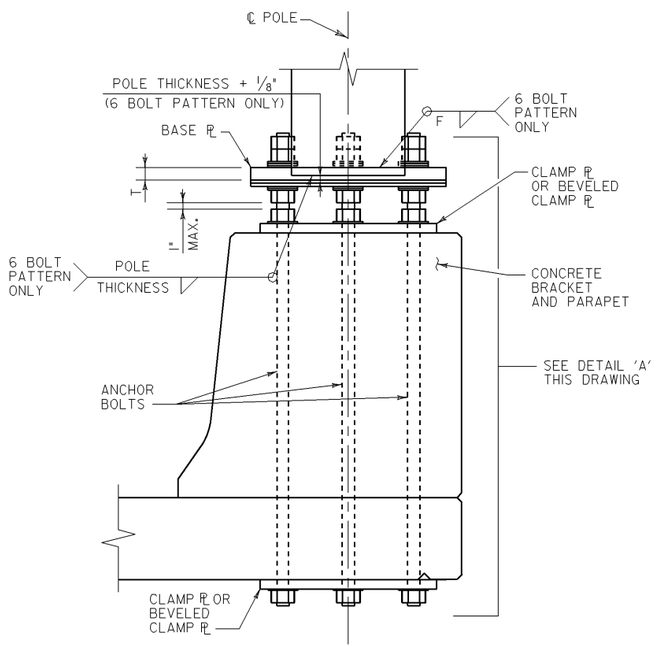

ANCHOR BASE DETAIL – SECTION

SCALE: 1"=1'-0"

BASE PLATE AND ANCHOR BOLT DATA						
PROPOSED SIGN STRUCTURE NUMBER	NO. OF BOLTS	ANCHOR BOLT DIA.	BASE ℞ DIA.	BOLT CIRCLE DIA.	T	FILLET WELD SIZE (F)
OH-52	6	2"	31"	24"	2"	1/2"

OVERHEAD SPAN SIGN STRUCTURE – TRUSS CHORD SPLICE SCHEDULE				
CHORD SIZE	O.D.	B.C.	NO. & SIZE OF BOLTS	FLANGE PLATE THICKNESS
6.625" O.D.	13 3/4"	10 1/4"	8 - 1" ø	1 3/4"

NOTE: REFER TO STANDARD NO. MD 803.08-15 FOR THE TRUSS CHORD SPLICE DETAILS.

NOTES:

A. ALL RESILIENT LAMINATED FABRIC PADS AND WASHERS SHALL BE MANUFACTURED BY FABREEKA OR APPROVED EQUAL AND CONFORM TO MIL-C-882E (MILITARY SPECIFICATION).

B. ALL STEEL PLATES SHALL CONFORM TO A 709, GRADE 36. PLATES AND HARDWARE SHALL BE GALVANIZED PER A 123 AND A 153, RESPECTIVELY.

C. ALL NUTS AND WASHERS SHALL MEET THE REQUIREMENTS OF 909.08.

D. ANCHOR BOLTS SHALL CONFORM TO F 1554, GRADE 55 SI. ANCHOR BOLTS SHALL BE GALVANIZED FULL LENGTH.

E. RESILIENT LAMINATED FABRIC PAD AND LEVELING PLATE DIMENSIONS SHALL MATCH THE BASE PLATE.

F. THE NUTS ADJACENT TO THE BEVELED CLAMP PLATES SHALL BE LOCKED IN PLACE BY APPLYING LOCTITE 277 OR APPROVED EQUAL. THE LEVELING NUTS SHALL BE LOCKED IN PLACE WITH LOCTITE 277 OR APPROVED EQUAL UPON COMPLETION OF INSTALLING SIGN STRUCTURE TRUSS WITH SIGNS AND LUMINAIRES AND AFTER THE TOWER IS PLUMBED. LOCTITE 277 OR APPROVED EQUAL SHALL BE INSTALLED IN ACCORDANCE WITH MANUFACTURER'S RECOMMENDATIONS. COST SHALL BE INCLUDED IN THE PERTINENT NEW SIGN STRUCTURE SUPPORT ITEM.

G. ALL ANCHOR BOLT NUTS SHALL BE TIGHTENED USING TURN OF THE NUT METHOD. (30° MIN. TO 45° MAX. TURN AFTER SNUG TIGHT).

H. FOR ADDITIONAL NOTES, SEE 'GENERAL NOTES' ON DWG. NO. BM-4.

I. REFER TO SPECIAL PROVISIONS FOR ADDITIONAL INFORMATION.

J. LENGTH OF ANCHOR BOLTS ARE DEPENDENT ON EXISTING CROSS SLOPE AND PROFILE OF THE BRIDGE DECK. THEREFORE, FIELD SURVEY SHALL BE PERFORMED TO OBTAIN THE REQUIRED LENGTH OF ANCHOR BOLTS PRIOR TO FABRICATION.

K. A SINGLE THICKNESS OF PREFORMED FABRIC BEARING PAD CONFORMING TO 910.02.03 SHALL BE PLACED BETWEEN EACH CLAMP PLATE AND THE ADJACENT CONCRETE SURFACE.

WR&A
Whitman, Requardt and Associates, LLP
Engineers and Planners
801 S. Caroline Street
Baltimore, Maryland 21231
(410) 235-3450

Maryland Transportation Authority
Engineering Division

ADDENDUMS & REVISIONS			
NO.	DESCRIPTION	BY	DATE
m:\3154910\FT-928\FT-928_BM03FMT.dgn			10/28/2009

I-95 FROM MORAVIA ROAD TO THE FORT McHENRY TUNNEL - PHASE 1 - SOUTHBOUND

I-95 (BALTIMORE CITY)

BRIDGE MOUNTED OVERHEAD SIGN STRUCTURES - TRUSS CHORD, BASE PLATE AND ANCHORAGE DETAILS

DESIGNED BY J.T.L. | DRAWN BY W.R.A. | CHECKED BY W.A.G.

CONST. REVIEW BY _____ | DATE DECEMBER 2009 | SCALE AS SHOWN

CONTRACT NO. FT-928-000-006

DRAWING NO. BM-5

SHEET NO. 146 OF 188

DRILL HOLES

DRILL HOLES

DRILL HOLES

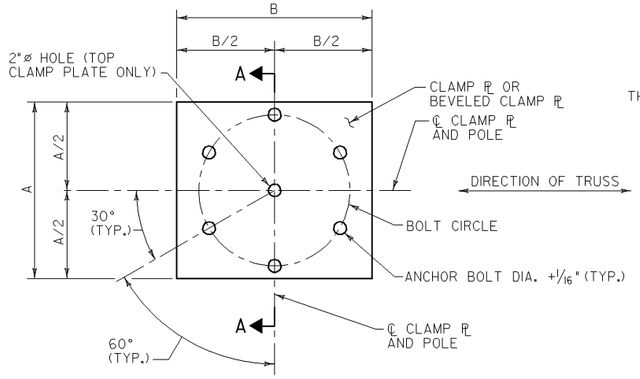

PLAN – CLAMP PLATE 6 BOLT PATTERN

SCALE: 1"= 1'-0"

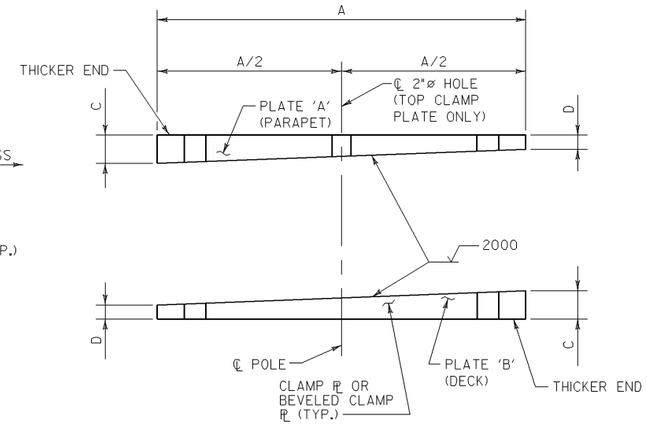

NOTE:
CLAMP PLATES ARE BEVELED IN 'A' DIMENSION ONLY.

SECTION A–A

SCALE: 1½"= 1'-0"

OVERHEAD SPAN SIGN STRUCTURES – CLAMP PLATE TABLE											
PROPOSED SIGN STRUCTURE NUMBER	PLATE DESIGNATION	'A'	'B'	LEFT TOWER				RIGHT TOWER			
				FRONT POLE		REAR POLE		FRONT POLE		REAR POLE	
				'C'	'D'	'C'	'D'	'C'	'D'	'C'	'D'
OH-52	PLATE 'A'	31"	28"	2 7/16"	1 1/2"	2 7/16"	1 1/2"	2 7/16"	1 1/2"	2 7/16"	1 1/2"
	PLATE 'B'	31"	28"	2 7/16"	1 1/2"	2 7/16"	1 1/2"	2 7/16"	1 1/2"	2 7/16"	1 1/2"

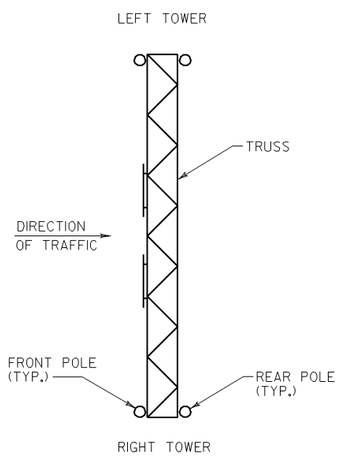

PLAN – OVERHEAD SIGN STRUCTURE ORIENTATION

NOT TO SCALE

NOTES:

A. FOR ANCHOR BOLT DIAMETER AND BOLT CIRCLE INFORMATION, SEE DWG. NO. BM-5.

B. THICKNESS FOR BEVELED CLAMP PLATES DETERMINED FROM INTERPOLATING BETWEEN DECK ELEVATIONS SHOWN IN THE EXISTING CONTRACT PLANS FOR RESPECTIVE SIGN STRUCTURE STRUCTURE LOCATION. THE CONTRACTOR SHALL FIELD VERIFY THE CHANGE IN ELEVATION PRIOR TO FABRICATING THE BEVELED CLAMP PLATES.

C. THICKER END SHALL BE MARKED TO INSURE PROPER INSTALLATION IN FIELD.

D. CONTRACTOR HAS THE OPTION OF FURNISHING A SINGLE PLATE FOR THE BEVELED CLAMP PLATES OR A COMBINATION OF TWO (2) PLATES TO ACCOMMODATE THE REQUIRED THICKNESS SHOWN. NO PLATE SHALL HAVE A THICKNESS OF LESS THAN 1½". NO ADDITIONAL COMPENSATION WILL BE MADE FOR WHICH EVER ALTERNATIVE IS SELECTED.

WR&A
Whitman, Requardt and Associates, LLP
Engineers and Planners
801 S. Caroline Street
Baltimore, Maryland 21231
(410) 235-3450

Maryland Transportation Authority
Engineering Division

ADDENDUMS & REVISIONS			
NO.	DESCRIPTION	BY	DATE
m:\315491O\FT-928\FT-928_BM04FMT.dgn			10/28/2009

I-95 FROM MORAVIA ROAD TO THE FORT McHENRY TUNNEL - PHASE 1 - SOUTHBOUND

I-95 (BALTIMORE CITY)

BRIDGE MOUNTED OVERHEAD SIGN STRUCTURES - CLAMP PLATE DETAILS

DESIGNED BY J.T.L.	DRAWN BY W.R.A.	CHECKED BY W.A.G.
CONST. REVIEW BY	DATE DECEMBER 2009	SCALE AS SHOWN

CONTRACT NO. FT-928-000-006

DRAWING NO. BM-6

SHEET NO. 147 OF 188

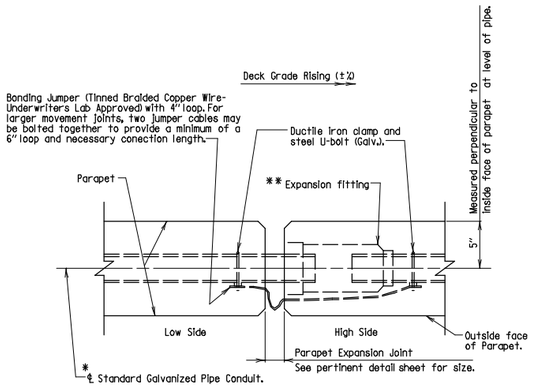

SECTION
Scale: 1½" = 1'-0"

* For conduit size see Superstructure "Typical Section" sheet. Vertical location of ℄ of this conduit shall be at least 4" below bottom of railing or fencing anchorage systems.

** Expansion fittings for use with rigid galvanized steel conduit shall consist of a malleable iron head and steel sleeve which shall be hot-dipped galvanized and assembled with a watertight packing gland, an insulated bushing, pressure ring and gasket and a tinned-copper bond to assure continuity of ground. The fitting shall provide, unless otherwise noted on the plans: 4" of movement for all compression seal roadway joints and 8" of movement for all other roadway joints, such as steel finger joints.

Notes:
1. Place expansion joint in pipe conduit and parapet at every expansion joint at supports in bridge deck.
2. #10 galvanized pull wire to be provided for full length of conduit and left in place.
3. Contractor may furnish either PVC conduit as shown on sheet 2 of 2 or material shown on this detail. However only one type can be used throughout a structure.

APPROVAL		
R.E. Pfohl DIRECTOR OFFICE OF STRUCTURES		
DATE: 6/20/75		
REVISIONS		
SHA	FHWA	
7-5-83	11-29-85	
9-1-83	11-29-85	
12-29-89	6-8-90	
1-22-01		
FHWA APPROVAL		
DATE: 8-24-76		

STATE OF MARYLAND
DEPARTMENT OF TRANSPORTATION
STATE HIGHWAY ADMINISTRATION
OFFICE OF STRUCTURES

EXPANSION JOINT FOR CONDUIT IN PARAPET

STANDARD NO. BR-SS(0.01)-75-13 SHEET 1 OF 2

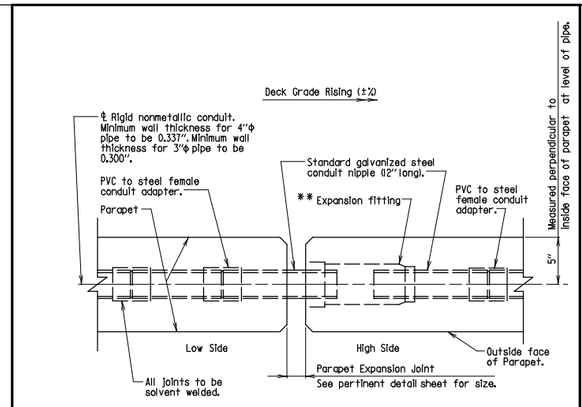

Note: No bonding jumper cable is required.

SECTION
Scale: 1½" = 1'-0"

* For conduit size see Superstructure "Typical Section" sheet. Vertical location of ℄ of this conduit shall be at least 4" below bottom of railing or fencing anchorage systems.

** Expansion fittings for use with rigid galvanized steel conduit shall consist of a malleable iron head and steel sleeve which shall be hot-dipped galvanized and assembled with a watertight packing gland, an insulated bushing, pressure ring and gasket and a tinned-copper bond to assure continuity of ground. The fitting shall provide, unless otherwise noted on the plans: 4" of movement for all compression seal roadway joints and 8" of movement for all other roadway joints, such as steel finger joints.

Notes:
1. Place expansion joint in pipe conduit and parapet at every expansion joint at supports in bridge deck.
2. #10 galvanized pull wire to be provided for full length of conduit and left in place.
3. All pipe and expansion joint must be U.L. approved for encasement in concrete.
4. Fittings to be PVC, except for expansion joint.
5. Nonmetallic conduit shall conform to 921.07.02.

APPROVAL		
R.E. Pfohl DIRECTOR OFFICE OF STRUCTURES		
DATE: 9/27/83		
REVISIONS		
SHA	FHWA	
1-3-90		
5-26-92		
1-4-94		
1-22-01		
FHWA APPROVAL		
DATE: 11-29-85		

STATE OF MARYLAND
DEPARTMENT OF TRANSPORTATION
STATE HIGHWAY ADMINISTRATION
OFFICE OF STRUCTURES

EXPANSION JOINT FOR CONDUIT IN PARAPET

STANDARD NO. BR-SS(0.01)-75-13 SHEET 2 OF 2

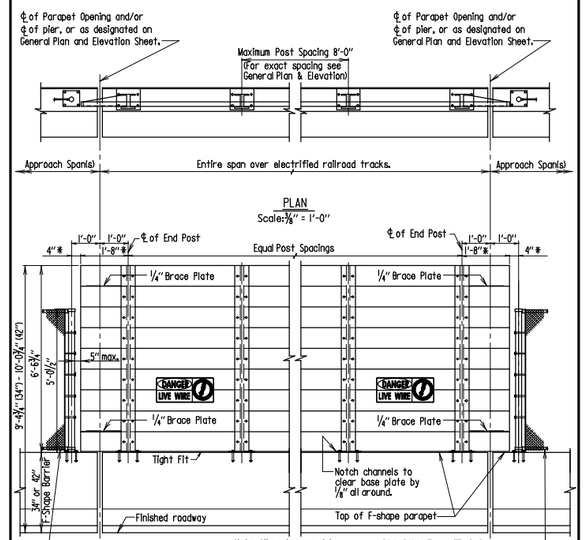

Note:
1. All shapes and plates (except anchor plates) to be aluminum Designation 6061-T6.
2. Material for anchor studs shall conform to A.S.T.M. Designation: A-276, Type 430 or Type 304 Stainless Steel, annealed, hot-finished, ultimate strength 70,000 p.s.i. min. 20% min. elongation. Threads to be rolled and not cut.
3. Material for anchor plates shall be steel conforming to A.S.T.M. Designation: A-36 epoxy coated.
4. All hardware not specifically called for on any detail shall be stainless steel A.S.T.M. A-304.

APPROVAL		
R.E. Pfohl DIRECTOR OFFICE OF STRUCTURES		
DATE: 9/15/77		
REVISIONS		
SHA	FHWA	
12-15-82	11-29-85	
6-7-88	6-8-90	
10-26-01		
3-4-04		
FHWA APPROVAL		
DATE: 9-15-77		

STATE OF MARYLAND
DEPARTMENT OF TRANSPORTATION
STATE HIGHWAY ADMINISTRATION
OFFICE OF STRUCTURES

PROTECTIVE BARRIER FOR PORTION OF BRIDGE OVER ELECTRIFIED RAILROAD WITH F-SHAPE PARAPET

STANDARD NO. BR-SS(5.02)-76-55 SHEET 1 OF 4

SUPER - RAILING - BARRIER

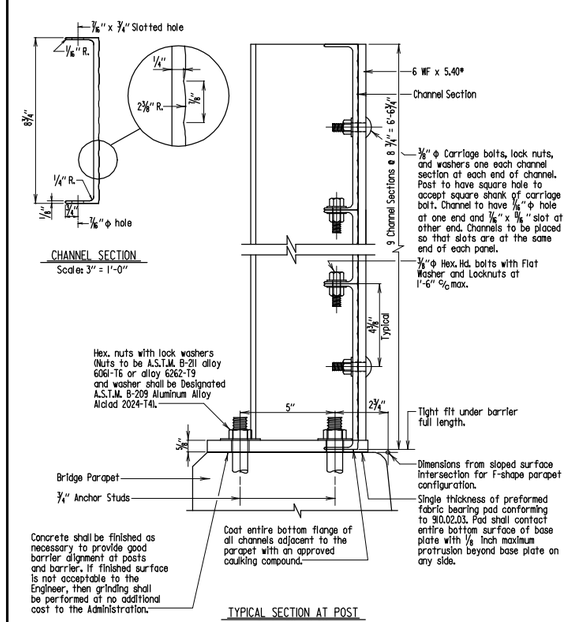

TYPICAL SECTION AT POST
Scale: 3" = 1'-0"

APPROVAL		
R.E. Pfohl DIRECTOR OFFICE OF STRUCTURES		
DATE: 8/1/77		
REVISIONS		
SHA	FHWA	
9-15-00		
10-26-01		
3-4-04		
10-9-07		
FHWA APPROVAL		
DATE: 7-21-77		

STATE OF MARYLAND
DEPARTMENT OF TRANSPORTATION
STATE HIGHWAY ADMINISTRATION
OFFICE OF STRUCTURES

PROTECTIVE BARRIER FOR PORTION OF BRIDGE OVER ELECTRIFIED RAILROAD WITH F-SHAPE PARAPET

STANDARD NO. BR-SS(5.02)-76-55 SHEET 2 OF 4

SUPER - RAILING - BARRIER

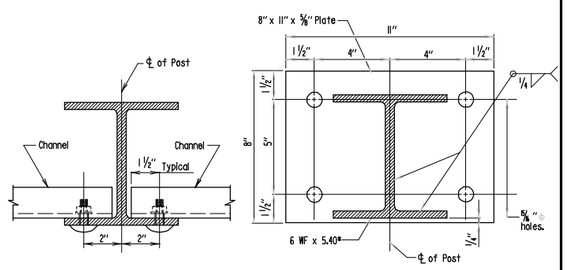

INTERMEDIATE POST CONNECTION
Scale: 3" = 1'-0"

BASE PLATE DETAIL
Scale: 3" = 1'-0"

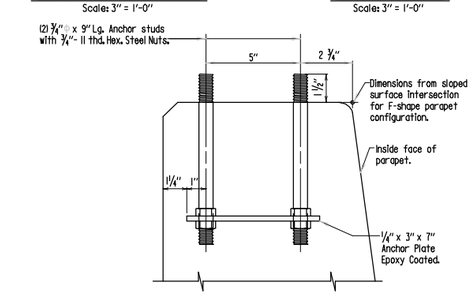

ANCHORAGE DETAIL
Scale: 3" = 1'-0"

APPROVAL		
R.E. Pfohl DIRECTOR OFFICE OF STRUCTURES		
DATE: 8/1/77		
REVISIONS		
SHA	FHWA	
6-8-90	6-8-90	
10-26-01		
3-4-04		
FHWA APPROVAL		
DATE: 6-8-90		

STATE OF MARYLAND
DEPARTMENT OF TRANSPORTATION
STATE HIGHWAY ADMINISTRATION
OFFICE OF STRUCTURES

PROTECTIVE BARRIER FOR PORTION OF BRIDGE OVER ELECTRIFIED RAILROAD WITH F-SHAPE PARAPET

STANDARD NO. BR-SS(5.02)-76-55 SHEET 3 OF 4

SUPER - RAILING - BARRIER

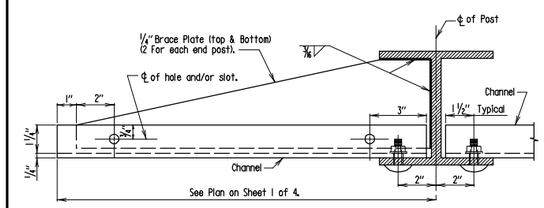

END POST CONNECTIONS
Scale: 3" = 1'-0"

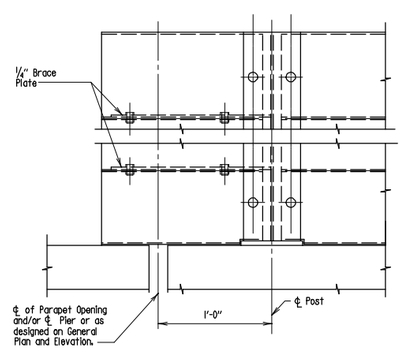

END POST ELEVATION
Scale: 3" = 1'-0"

APPROVAL		
R.E. Pfohl DIRECTOR OFFICE OF STRUCTURES		
DATE: 8/1/77		
REVISIONS		
SHA	FHWA	
6-8-90	6-8-90	
10-26-01		
3-4-04		
FHWA APPROVAL		
DATE: 7-21-77		

STATE OF MARYLAND
DEPARTMENT OF TRANSPORTATION
STATE HIGHWAY ADMINISTRATION
OFFICE OF STRUCTURES

PROTECTIVE BARRIER FOR PORTION FOR BRIDGE OVER ELECTRIFIED RAILROAD WITH F-SHAPE PARAPET

STANDARD NO. BR-SS(5.02)-76-55 SHEET 4 OF 4

SUPER - RAILING - BARRIER

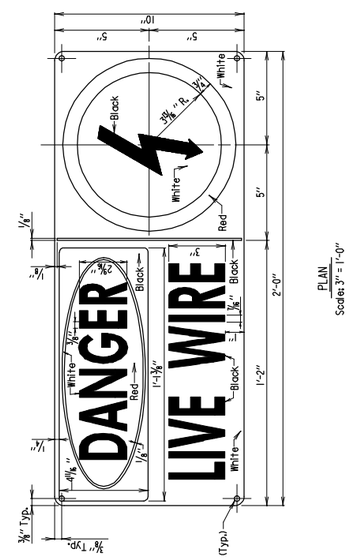

PLAN
Scale: 3" = 1'-0"

Notes:
1. Sign to be made of 0.04 thick aluminum, rounded corners.
2. Solvent-clean and prestreat all surfaces with a wash primer conforming to A.S.T.M. Designation D-2369 followed by Federal Specification TT-P-1757 or TT-P-645. Finish coat may be and oil, alkyd, vinyl or epoxy paint that does not contain lead in its pigment.
3. Letters to be in accordance with Standard.
4. Back of sign to be mill finish.
5. Holes to be provided with nickeled brass eyelets to permit securing sign with 1/4" x 4" Lg. Stainless Steel Hex. Hd. cap screws and washers and 1/4" Lg. Stainless Steel Hex. Hd. cap (where applicable). If attached to concrete suitable anchor insert shall be used.
6. Sign to be installed on barrier to be fastened 5'-0" above area adjacent to the parapet.
7. Cost of furnishing and installing the signs to be included in the price for Protective Barrier.

APPROVAL		
R.E. Pfohl DIRECTOR OFFICE OF STRUCTURES		
DATE: 1/11/83		
REVISIONS		
SHA	FHWA	
1-22-01		
FHWA APPROVAL		
DATE: 11-29-85		

STATE OF MARYLAND
DEPARTMENT OF TRANSPORTATION
STATE HIGHWAY ADMINISTRATION
OFFICE OF STRUCTURES

ELECTRIFIED TERRITORY DANGER SIGN

STANDARD NO. BR-SS(5.04)-82-141 SHEET 1 OF 2

MARYLAND TRANSPORTATION AUTHORITY
Engineering Division

I-95 FROM MORAVIA ROAD TO THE FORT McHENRY TUNNEL - PHASE 1 - SOUTHBOUND
I-95 (BALTIMORE CITY)

MD SHA STANDARDS DETAILS FOR STRUCTURES

DESIGNED BY	DRAWN BY	CHECKED BY
CONST. REVIEW BY	DATE DECEMBER 2009	SCALE AS SHOWN

ADDENDUMS & REVISIONS

NO.	DESCRIPTION	BY	DATE

CONTRACT NO. FT 928-000-006
DRAWING NO. **STD-1**
SHEET NO. 148 OF 188

r:\49562\dgn\Stds\stds.dgn Friday, December 04, 2009 AT 03:00 PM

FILE: r:\49562\dgn\Stds\stds.dgn
DATE: Friday, December 04, 2009 AT 03:00 PM

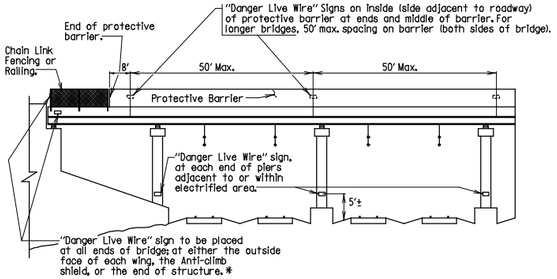

OVERHEAD BRIDGES

Scale: None

* Where structure is of multispan configuration and end of bridge is a considerable distance from electrified areas (over 200' from electrified span) additional signs shall be placed in spans just adjacent to electrified span(s).

APPROVAL		
DIRECTOR OFFICE OF STRUCTURES		
DATE: 1/11/83		
REVISIONS		
SHA	FHWA	
FHWA APPROVAL DATE: 11-29-85		

STATE OF MARYLAND
DEPARTMENT OF TRANSPORTATION
STATE HIGHWAY ADMINISTRATION
OFFICE OF STRUCTURES

ELECTRIFIED TERRITORY
DANGER SIGN

STANDARD NO. BR-SS(5.04)-82-141 SHEET 2 OF 2

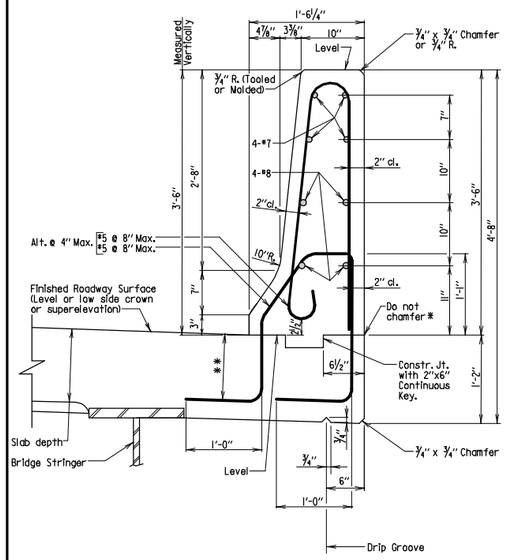

SECTION

Scale: 1" = 1'-0"

* In order to insure a smooth and acceptable surface, 420.03.J1 (Construction joints) will be strictly adhered to.

** Slab depth minus 1".

Notes:
1. All #7 and #8 longitudinal bars shall be placed continuously in the parapet from expansion opening to expansion opening in a simple span bridge and expansion opening to centerline of pier in a multi span bridge.
2. Key is nominal size.
3. Front face of parapet to be dimensioned from a plumb line.
4. All reinforcing steel to be epoxy coated.
5. Concrete deck reinforcing steel not shown.

42" STRAIGHT BACK TL-5 BRIDGE RAILING

APPROVAL		
DIRECTOR OFFICE OF STRUCTURES		
DATE: 10/22/03		
REVISIONS		
SHA	FHWA	
11-26-07		
FHWA APPROVAL DATE: 7-15-03		

STATE OF MARYLAND
DEPARTMENT OF TRANSPORTATION
STATE HIGHWAY ADMINISTRATION
OFFICE OF STRUCTURES

LEVEL OR LOW SIDE OF CROWN (OR SUPERELEVATED) SECTION OF 42" F-SHAPE PARAPET WITH STRAIGHT BACK

STANDARD NO. BR-SS(6.02)-03-27B SHEET 1 OF 2

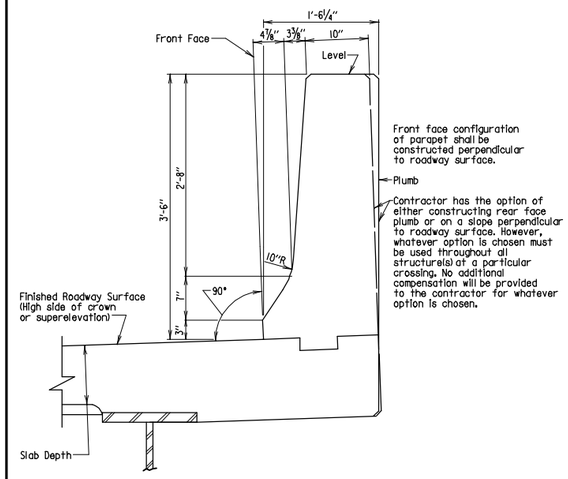

SECTION

Scale: 1" = 1'-0"

Note:
For all details not shown see sheet 1 of 2.

42" STRAIGHT BACK TL-5 BRIDGE RAILING

APPROVAL		
DIRECTOR OFFICE OF STRUCTURES		
DATE: 10/22/03		
REVISIONS		
SHA	FHWA	
11-26-07		
FHWA APPROVAL DATE: 7-15-03		

STATE OF MARYLAND
DEPARTMENT OF TRANSPORTATION
STATE HIGHWAY ADMINISTRATION
OFFICE OF STRUCTURES

HIGH SIDE OF CROWN (OR SUPERELEVATED) SECTION OF 42" F-SHAPE PARAPET WITH STRAIGHT BACK

STANDARD NO. BR-SS(6.02)-03-27B SHEET 2 OF 2

SUPER CONCRETE WORK

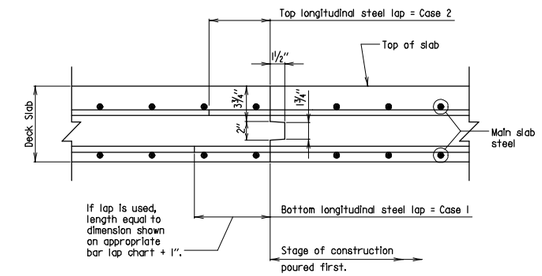

SECTION

Scale: 1½" = 1'-0"

Notes:
1. Reinforcing steel to be continuous thru joint.
2. Entire face of construction joint shall be coated with an approved epoxy bonding compound.
3. All dimensions shown are actual dimensions.
4. See lap charts for length of splices.

APPROVAL		
DIRECTOR OFFICE OF STRUCTURES		
DATE: 1/6/78		
REVISIONS		
SHA	FHWA	
12-12-83	2-23-84	
7-5-84	11-8-84	
12-2-87	6-8-90	
3-20-95		
FHWA APPROVAL DATE: 1-31-78		

STATE OF MARYLAND
DEPARTMENT OF TRANSPORTATION
STATE HIGHWAY ADMINISTRATION
OFFICE OF STRUCTURES

BRIDGE DECK SLAB DETAIL AT TRANSVERSE CONSTRUCTION JOINT

STANDARD NO. BR-SS(6.07)-77-68 SHEET 1 OF 1

SUPER CONCRETE WORK

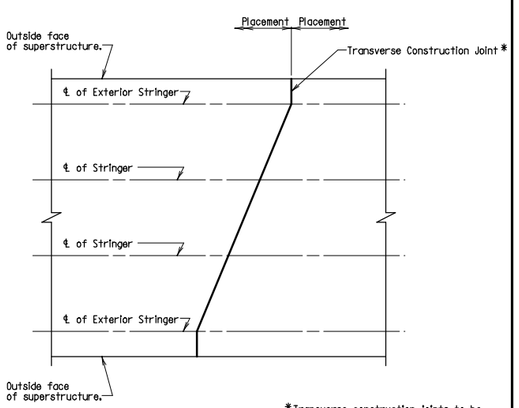

PLAN

Scale: None

* Transverse construction joints to be placed parallel to center line bearing for piers and abutments. If substructure units are not parallel then transverse construction joints shall be parallel to the closest substructure unit center line of bearing.

Transverse construction joints to be perpendicular to the outside face of superstructure for the portion of the deck outside of the exterior stringer.

Note:
For detail of construction joint see Standard No. BR-SS(6.07)-77-68.

APPROVAL		
DIRECTOR OFFICE OF STRUCTURES		
DATE: 4/12/78		
REVISIONS		
SHA	FHWA	
12-15-80	12-15-80	
9-13-94		
FHWA APPROVAL DATE: 10-17-78		

STATE OF MARYLAND
DEPARTMENT OF TRANSPORTATION
STATE HIGHWAY ADMINISTRATION
OFFICE OF STRUCTURES

LAYOUT OF TRANSVERSE JOINT FOR SKEWED BRIDGE DECK

STANDARD NO. BR-SS(6.08)-78-69 SHEET 1 OF 1

NOTES

Design:
1. Latest A.A.S.H.T.O. Standard Specifications for Highway Bridges.
2. f'_c = 4500 p.s.i., f_c = 0.3 f'_c = 1350 p.s.i., f_s = 24,000 p.s.i.
3. Design includes provision for 2" future wearing surface.

General:
1. Transverse bars shall be placed normal to ℄ stringers, except in case of curved stringers. When stringers are curved transverse bars shall be placed radially.
2. When skew angles are greater than 60° then Contractor may use either Reinforcing Steel Pattern No. 1 or No. 2 throughout bridge.
3. When the effective span is less than 5'-9", all bars shall be straight top and bottom. No truss bars are to be used.

APPROVAL		
DIRECTOR OFFICE OF STRUCTURES		
DATE: 12/4/79		
REVISIONS		
SHA	FHWA	
10-4-82	6-8-90	
3-1-84	6-8-90	
11-18-87	6-8-90	
10-12-90		
FHWA APPROVAL DATE: 6-8-90		

STATE OF MARYLAND
DEPARTMENT OF TRANSPORTATION
STATE HIGHWAY ADMINISTRATION
OFFICE OF STRUCTURES

BRIDGE DECK SLAB
GENERAL NOTES AND BAR SPACING

STANDARD NO. BR-SS(6.11)-79-90 SHEET 1 OF 2

OFFICE OF BRIDGE DEVELOPMENT

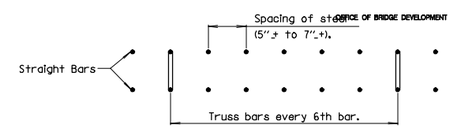

REINFORCING STEEL PATTERN NO. 1

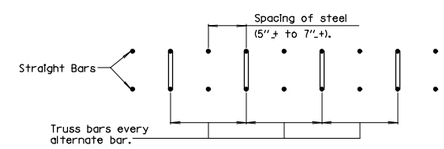

REINFORCING STEEL PATTERN NO. 2

1. The Contractor has the option of using Reinforcing steel Pattern No. 1 or No. 2 in the unhatched portions of the decks shown below.
2. The Contractor shall use only Reinforcing Steel Pattern No. 1 in the hatched portions of the decks shown below.

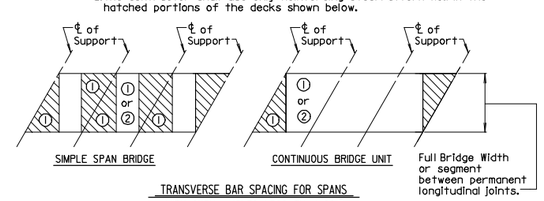

TRANSVERSE BAR SPACING FOR SPANS WITH SKEW ANGLES LESS THAN 60°

Scale: 1" = 1'-0"

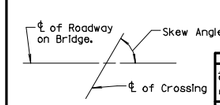

SKEW ANGLE

Scale: None

APPROVAL		
DIRECTOR OFFICE OF STRUCTURES		
DATE: 12/4/79		
REVISIONS		
SHA	FHWA	
10-4-82	6-8-90	
3-1-84	6-8-90	
11-18-87	6-8-90	
9-25-89	6-8-90	
FHWA APPROVAL DATE: 6-8-90		

STATE OF MARYLAND
DEPARTMENT OF TRANSPORTATION
STATE HIGHWAY ADMINISTRATION
OFFICE OF STRUCTURES

BRIDGE DECK SLAB
GENERAL NOTES AND BAR SPACING

STANDARD NO. BR-SS(6.11)-79-90 SHEET 2 OF 2

MARYLAND TRANSPORTATION AUTHORITY

Engineering Division

I-95 FROM MORAVIA ROAD TO THE FORT McHENRY TUNNEL - PHASE 1 - SOUTHBOUND

I-95 (BALTIMORE CITY)

MD SHA STANDARDS DETAILS FOR STRUCTURES

DESIGNED BY	DRAWN BY	CHECKED BY
CONST. REVIEW BY	DATE DECEMBER 2009	SCALE AS SHOWN

ADDENDUMS & REVISIONS

NO.	DESCRIPTION	BY	DATE

CONTRACT NO. FT 928-000-006

DRAWING NO. **STD-2**

SHEET NO. 149 OF 188

r:\49562\dgn\Stds\stds.dgn Friday, December 04, 2009 AT 03:00 PM

FILE: r:\49562\dgn\Stds\stds.dgn
DATE: Friday, December 04, 2009 AT 03:00 PM

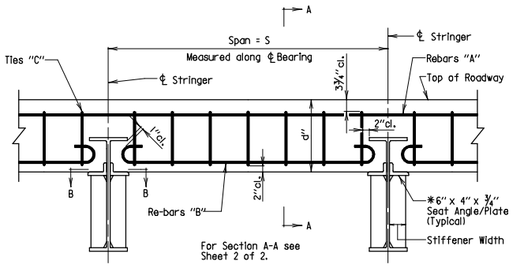

ELEVATION AT INTERIOR BEAM

Scale: ½"=1'-0"

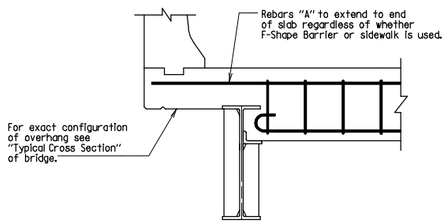

ELEVATION AT EXTERIOR BEAM

Scale: ½"=1'-0"

Note:
1. For Section B-B, see Standard No. BR-SS(8J21-85-1170.
2. * Longest leg of angle shall be increased as necessary so that angle exceeds stiffener width by at least ½". In lieu of the seat angle a ¾" plate may be used. The plate shall be a minimum of 6" wide and shall exceed stiffener width by at least ½".

APPROVAL		
DIRECTOR OFFICE OF STRUCTURES		
DATE: 10/15/80		
REVISIONS		
SHA	FHWA	
2-19-92		
2-14-00		
1-22-01		
10-22-03		
FHWA APPROVAL DATE: 6-8-90		

STATE OF MARYLAND
DEPARTMENT OF TRANSPORTATION
STATE HIGHWAY ADMINISTRATION
OFFICE OF STRUCTURES

CONCRETE DIAPHRAGMS AT PIERS (WITH EXPANSION JOINTS) AND AT ALL ABUTMENTS

STANDARD NO. BR-SS(6.22)-80-120 SHEET 1 OF 2

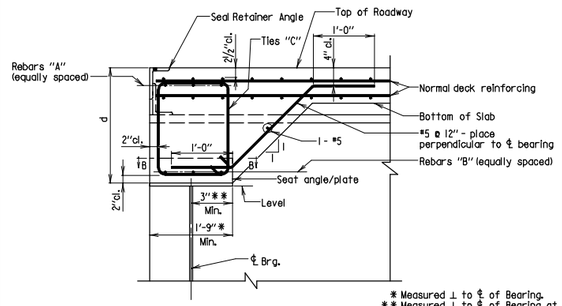

* Measured ⊥ to ℄ of Bearing.
** Measured ⊥ to ℄ of Bearing at Edge of Bearing Stiffener.

SECTION A-A

Scale: None

Span = S	Depth of Diaphragm = d	Re-bars "A"	Re-bars "B"	Ties "C"
Up to 8'	1'-11"	3-#7's	3-#7's	#5 @ 9" Spacing Maximum Place ⊥ to ℄ Bearing
over 8' to 11'	1'-11"	3-#8's	3-#8's	
over 11' to 14'	2'-0"	3-#8's	3-#8's	
over 14' to 16'	2'-1"	3-#9's	3-#9's	

Note:
1. Studs and anchors for seal retainer angle, not shown.
2. All reinforcing steel sizes and spacings based on ASTM A-615, Grade 60 fy = 60 ksi.
3. For Section B-B, see Standard No. BR-SS(8J21-85-1170.

APPROVAL		
DIRECTOR OFFICE OF STRUCTURES		
DATE: 10/15/80		
REVISIONS		
SHA	FHWA	
7-18-94		
2-14-00		
1-22-01		
10-9-07		
FHWA APPROVAL DATE: 6-8-90		

STATE OF MARYLAND
DEPARTMENT OF TRANSPORTATION
STATE HIGHWAY ADMINISTRATION
OFFICE OF STRUCTURES

CONCRETE DIAPHRAGMS AT PIERS (WITH EXPANSION JOINTS) AND AT ALL ABUTMENTS

STANDARD NO. BR-SS(6.22)-80-120 SHEET 2 OF 2

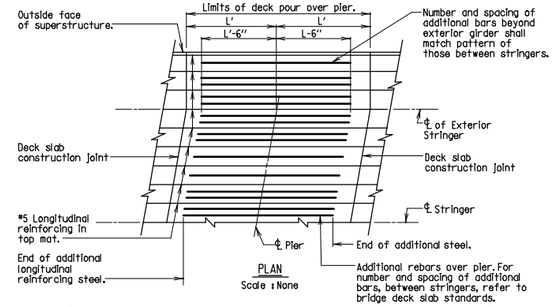

PLAN

Scale: None

Bridge# _____ Description: _____			
Location	L' (Back Stationing Span)	L (Ahead Stationing Span)	Bar Size *
Pier _____			
Pier _____			
Pier _____			
Pier _____			
Pier _____			
Pier _____			

* All bars to be #5 unless otherwise noted in this column.

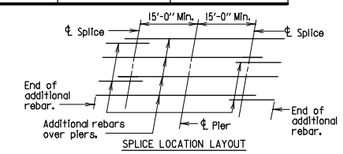

SPLICE LOCATION LAYOUT

Note:
1. If additional longitudinal reinforcing in pour requires splicing, then the reinforcing shall be spliced as per Splice Location Layout.

APPROVAL		
DIRECTOR OFFICE OF STRUCTURES		
DATE: 3/31/88		
REVISIONS		
SHA	FHWA	
7-6-88	6-8-90	
3-16-89	6-8-90	
FHWA APPROVAL DATE: 6-8-90		

STATE OF MARYLAND
DEPARTMENT OF TRANSPORTATION
STATE HIGHWAY ADMINISTRATION
OFFICE OF STRUCTURES

ADDITIONAL LONGITUDINAL REINFORCING IN TOP OF CONTINUOUS DECK SLABS OVER PIERS

STANDARD NO. BR-SS(6.30)-88-195 SHEET 1 OF 1

Note: Details shown are for single rail; double rail and fencing details are similar. On bridges with no fencing or railing see General Plan and Elevation for parapet control joint spacing.

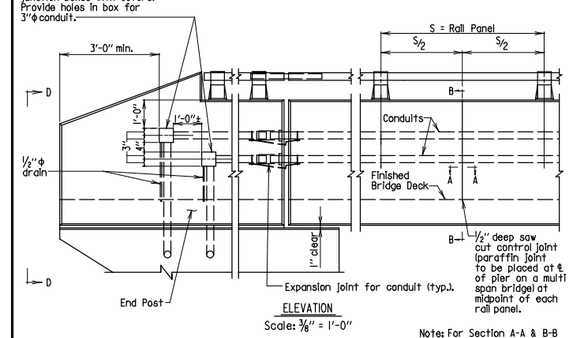

ELEVATION

Scale: ⅜" = 1'-0"

Note: For Section A-A & B-B see sheet 2 of 3.
For View D-D see sheet 2 of 3.
For Sections A-A and B-B at centerline of pier on multi-span continuous bridges, see sheet 3 of 3.

Notes:
1. The conduits and junction boxes are to be placed only when indicated in the Superstructure "Typical Section." If ℄ to ℄ of end junction boxes exceed 200', then additional junction boxes shall be placed in parapet, between control joints, so that the maximum distance between boxes is 200'. Junction boxes for light standards, may be utilized. All junction boxes to have ½"φ drain at drain at low point of box.
2. Conduit may be either PVC or galvanized pipe.
3. Conduits shall be transitioned vertically within length of approach slab to match with conduit locations in roadway barrier.

APPROVAL		
DIRECTOR OFFICE OF STRUCTURES		
DATE: 6/1/05		
REVISIONS		
SHA	FHWA	
FHWA APPROVAL DATE:		

STATE OF MARYLAND
DEPARTMENT OF TRANSPORTATION
STATE HIGHWAY ADMINISTRATION
OFFICE OF STRUCTURES

PARAPET CONTROL JOINT AND DUAL CONDUIT PLACEMENT WITH 42" F-SHAPE PARAPET

STANDARD NO. BR-SS(6.37)-05-247B SHEET 3 OF 3

SUPER-CONCRETE WORK

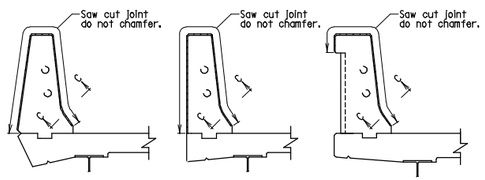

SECTION B-B

Scale: ⅜" = 1'-0"

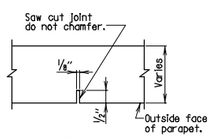

SECTION A-A

Scale: None

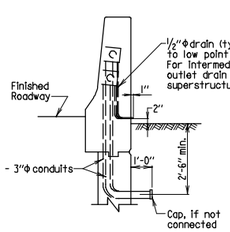

VIEW D-D

Scale: ⅜" = 1'-0"

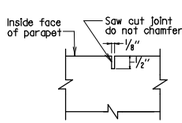

SECTION C-C

Scale: None

Notes:
1. Place saw cut joint at center of every rail panel.
2. Parapet is placed continuously.
3. Saw cut control joint to be sawed same day as concrete is poured.
4. Fencing and railing not shown.

APPROVAL		
DIRECTOR OFFICE OF STRUCTURES		
DATE: 6/1/05		
REVISIONS		
SHA	FHWA	
FHWA APPROVAL DATE:		

STATE OF MARYLAND
DEPARTMENT OF TRANSPORTATION
STATE HIGHWAY ADMINISTRATION
OFFICE OF STRUCTURES

PARAPET CONTROL JOINT AND DUAL CONDUIT PLACEMENT WITH 42" F-SHAPE PARAPET

STANDARD NO. BR-SS(6.37)-05-247B SHEET 2 OF 3

SUPER-CONCRETE WORK

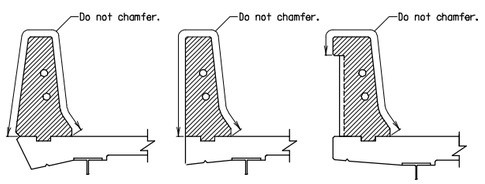

SECTION B-B

Scale: ⅜" = 1'-0"

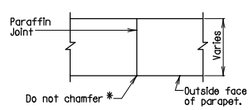

SECTION A-A

Scale: None

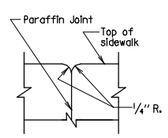

SECTION C-C

Scale: Full

*In order to insure a smooth and acceptable surface, 420.03.II (Construction Joints) will be strictly adhered to.

Notes:
1. Place vertical paraffin joint, shown hatched, at centerline of pier on multi-span continous bridges.
2. The placement of adjacent sections shall have a 40 hour delay between placements.
3. Railing and fencing not shown.

APPROVAL		
DIRECTOR OFFICE OF STRUCTURES		
DATE: 6/1/05		
REVISIONS		
SHA	FHWA	
FHWA APPROVAL DATE:		

STATE OF MARYLAND
DEPARTMENT OF TRANSPORTATION
STATE HIGHWAY ADMINISTRATION
OFFICE OF STRUCTURES

PARAPET CONTROL JOINT AND DUAL CONDUIT PLACEMENT WITH 42" F-SHAPE PARAPET

STANDARD NO. BR-SS(6.37)-05-247B SHEET 3 OF 3

SUPER-CONCRETE WORK

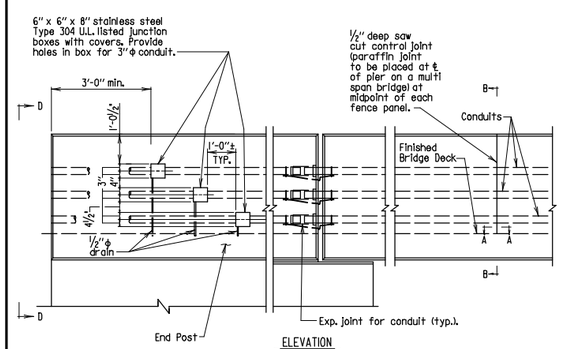

ELEVATION

Scale: ⅜" = 1'-0"

Note: For Sections A-A, B-B and View D-D, see sheet 2 of 3.
For Sections A-A and B-B at centerline of pier on multi-span continuous bridges, see sheet 3 of 3.

Notes:
1. The conduits and junction boxes are to be placed only when indicated in the Superstructure "Typical Section." If ℄ to ℄ of end junction boxes exceed 200', then additional junction boxes shall be placed in parapet, between control joints, so that the maximum distance between boxes is 200'. Junction boxes for light standards, may be utilized. All junction boxes to have ½"φ drain at low point of box.
2. Conduits may be either PVC or galvanized pipe.
3. Conduits shall be transitioned vertically within length of approach slab to match with conduit locations in roadway barrier.

APPROVAL		
DIRECTOR OFFICE OF STRUCTURES		
DATE: 6/1/05		
REVISIONS		
SHA	FHWA	
FHWA APPROVAL DATE:		

STATE OF MARYLAND
DEPARTMENT OF TRANSPORTATION
STATE HIGHWAY ADMINISTRATION
OFFICE OF STRUCTURES

PARAPET CONTROL JOINT AND THREE CONDUIT PLACEMENT WITH 42" F-SHAPE PARAPET

STANDARD NO. BR-SS(6.37)-05-247B MOD. SHEET 1 OF 3

SUPER-CONCRETE WORK

MARYLAND TRANSPORTATION AUTHORITY

Engineering Division

I-95 FROM MORAVIA ROAD TO THE FORT McHENRY TUNNEL - PHASE 1 - SOUTHBOUND

I-95 (BALTIMORE CITY)

MD SHA STANDARDS DETAILS FOR STRUCTURES

DESIGNED BY	DRAWN BY	CHECKED BY
CONST. REVIEW BY	DATE DECEMBER 2009	SCALE AS SHOWN

ADDENDUMS & REVISIONS

NO.	DESCRIPTION	BY	DATE

CONTRACT NO. FT 928-000-006

DRAWING NO. **STD-3**

SHEET NO. 150 OF 188

r:\49562\dgn\Stds\stds.dgn Friday, December 04, 2009 AT 03:00 PM

FILE: r:\49562\dgn\Stds\stds.dgn
DATE: Friday, December 04, 2009 AT 03:00 PM

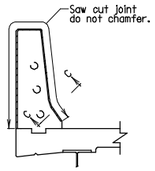

SECTION B-B
Scale: 3/8" = 1'-0"

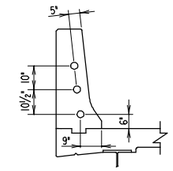

CONDUIT LOCATION DETAIL
Scale: 3/8" = 1'-0"

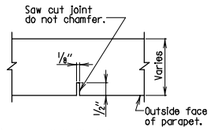

SECTION A-A
Scale: None

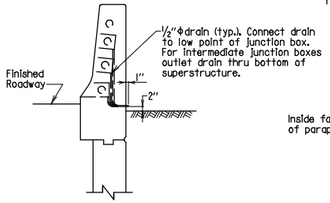

VIEW D-D
Scale: 3/8" = 1'-0"

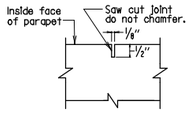

SECTION C-C
Scale: None

Notes:
1. Place saw cut joint at center of every rail panel.
2. Parapet is placed continuously.
3. Saw cut control joint to be sawed same day as concrete is poured.
4. Fencing and railing not shown.

STATE OF MARYLAND
DEPARTMENT OF TRANSPORTATION
STATE HIGHWAY ADMINISTRATION
OFFICE OF STRUCTURES

PARAPET CONTROL JOINT AND THREE CONDUIT PLACEMENT WITH 42" F-SHAPE PARAPET

STANDARD NO. BR-SS(6.37)-05-247B MOD. SHEET 2 OF 3

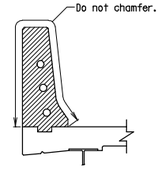

SECTION B-B
Scale: 3/8" = 1'-0"

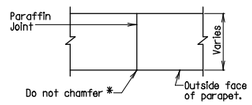

SECTION A-A
Scale: None

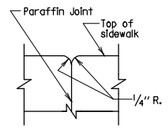

SECTION C-C
Scale: Full

*In order to insure a smooth and acceptable surface, 420.03.11 (Construction Joints) will be strictly adhered to.

Notes:
1. Place vertical paraffin joint, shown hatched, at centerline of pier on multi-span continous bridges.
2. The placement of adjacent sections shall have a 40 hour delay between placements.
3. Railing and fencing not shown.

STATE OF MARYLAND
DEPARTMENT OF TRANSPORTATION
STATE HIGHWAY ADMINISTRATION
OFFICE OF STRUCTURES

PARAPET CONTROL JOINT AND THREE CONDUIT PLACEMENT WITH 42" F-SHAPE PARAPET

STANDARD NO. BR-SS(6.37)-05-247B MOD. SHEET 3 OF 3

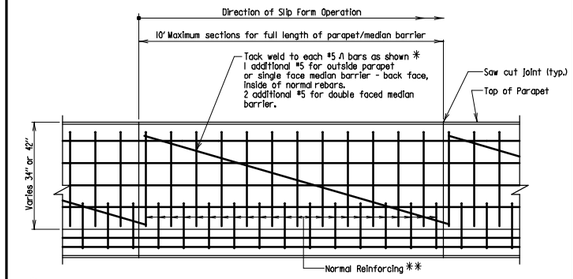

* Coat weld with epoxy touch up.
** See appropiate standard for rebar types and spacing pattern.

ELEVATION
Scale: 1/2" = 1'-0"

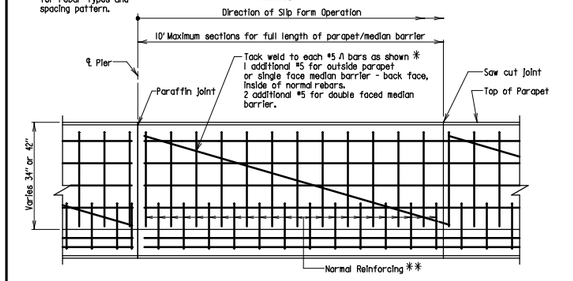

ELEVATION-MULTISPAN AT PIER
Scale: 1/2" = 1'-0"

34" OR 42" PARAPET OR MEDIAN

Note:
1. All longitudinal bars shall be placed continuously in the parapet/median barrier from expansion opening to expansion opening in a simple span bridge and expansion opening to centerline of pier in a multi span bridge.

APPROVAL
DIRECTOR OFFICE OF STRUCTURES
DATE: 2/17/94
REVISIONS
SHA FHWA
10-22-03

FHWA APPROVAL DATE:

STATE OF MARYLAND
DEPARTMENT OF TRANSPORTATION
STATE HIGHWAY ADMINISTRATION
OFFICE OF STRUCTURES

ADDITIONAL REINFORCING FOR SLIP FORMING PARAPETS AND MEDIAN BARRIERS

STANDARD NO. BR-SS(6.41)-94-297 SHEET 1 OF 1

SUPER - CONCRETE WORK

* - See appropriate Lap Chart.

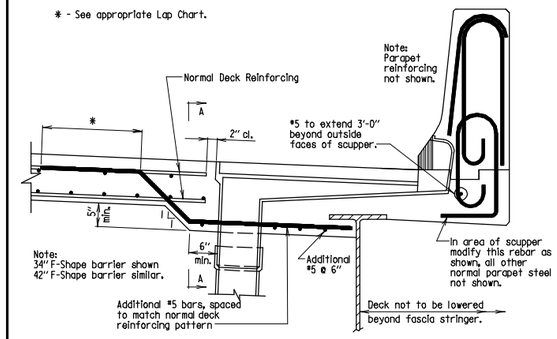

SECTION
Scale: 3/4" = 1'-0"

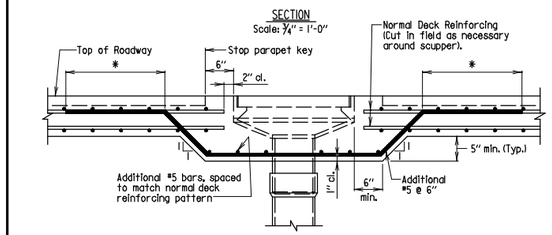

SECTION A-A
Scale: 3/4" = 1'-0"

34" OR 42" STRAIGHT BACK

Notes:
1. Wood forms may be used in the area of the scupper as approved by the Engineer.
2. Type IA scupper shown.

APPROVAL
DIRECTOR OFFICE OF STRUCTURES
DATE: 10/22/03
REVISIONS
SHA FHWA

FHWA APPROVAL DATE:

STATE OF MARYLAND
DEPARTMENT OF TRANSPORTATION
STATE HIGHWAY ADMINISTRATION
OFFICE OF STRUCTURES

BRIDGE DECK REINFORCEMENT PATTERN IN SCUPPER AREA FOR SCUPPER TYPES I & IA AT F-SHAPE PARAPET WITH STRAIGHT BACK

STANDARD NO. BR-SS(6.44)-03-346 SHEET 1 OF 1

SUPER - CONCRETE WORK

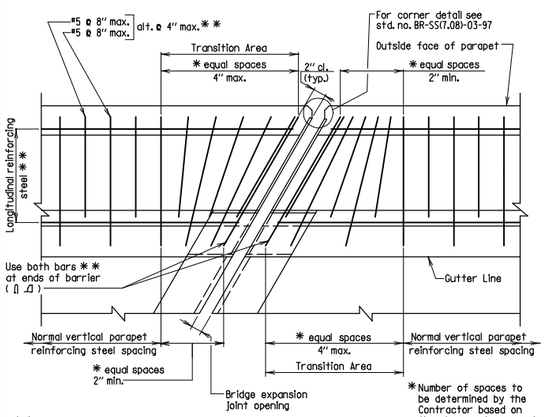

* * Number, shape and size of bars is contingent upon the height and style of parapet that is chosen. See Typical Section for details.

PLAN
Scale: 1" = 1'-0"

Note:
Dashed area of reinforcing to be eliminated in transition area.

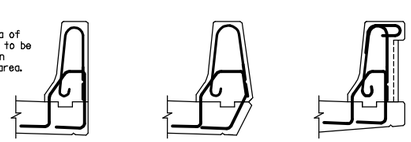

REINFORCING PATTERN FOR TRANSITION AREA ONLY

Notes:
1. All reinforcing steel to be epoxy coated.
2. Compression seal not shown.

APPROVAL
DIRECTOR OFFICE OF STRUCTURES
DATE: 1/18/05
REVISIONS
SHA FHWA

FHWA APPROVAL DATE:

STATE OF MARYLAND
DEPARTMENT OF TRANSPORTATION
STATE HIGHWAY ADMINISTRATION
OFFICE OF STRUCTURES

PARAPET REINFORCING STEEL PLACEMENT AT EXPANSION JOINT

STANDARD NO. BR-SS(6.58)-05-361 SHEET 1 OF 1

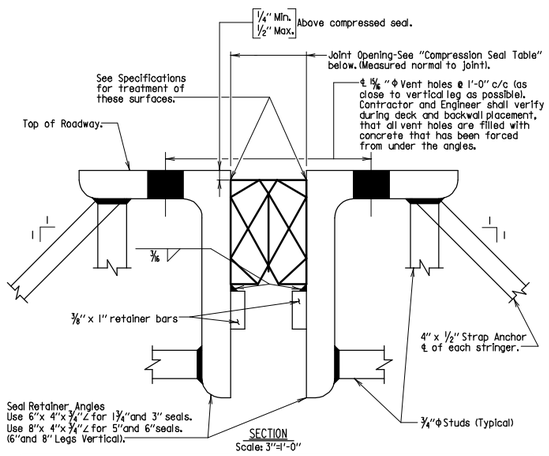

SECTION
Scale: 3" = 1'-0"

COMPRESSION SEAL TABLE								
Location	Uncompressed Seal Width	Joint Opening @						Movement Rating
		40°F	50°F	60°F	70°F	80°F	90°F	
BCW596-2 Abutment A	3 1/2"	1 7/8"	1 9/16"	1 3/4"	1 5/16"	1 5/8"	1 3/16"	1.40"
BCW596-2 Pier 13	5"	3 7/8"	3 5/8"	3 1/2"	3 3/8"	3 1/4"	3"	2.50"
BCW596-2 Abutment B	3 1/2"	1 7/8"	1 9/16"	1 3/4"	1 5/16"	1 5/8"	1 3/16"	1.40"
BCW598-2 Abutment A	3"	1 1/2"	1 7/16"	1 3/8"	1 5/16"	1 1/4"	1 3/16"	1.25"
BCW598-2 Pier 1	4"	3"	2 7/8"	2 3/4"	2 5/8"	2 3/8"	2 1/4"	1.70"
BCW598-2 Pier 3	4"	3"	2 7/8"	2 3/4"	2 5/8"	2 3/8"	2 1/4"	1.70"
BCW598-2 Abutment B	3"	1 1/2"	1 7/16"	1 3/8"	1 5/16"	1 1/4"	1 3/16"	1.25"

Note:
1. Seals 3 1/2" and smaller to be one piece for full length of seal (no joints).
2. Seals larger than 3 1/2" may have one shop splice per joint, if the length of joint exceeds 50'. Splice shall be at least 15' from gutter line.
3. Contractor shall field verify size of existing seals prior to ordering materials.

STATE OF MARYLAND
DEPARTMENT OF TRANSPORTATION
STATE HIGHWAY ADMINISTRATION
OFFICE OF STRUCTURES

COMPRESSION SEAL JOINT AND RETAINING ANGLE DETAIL

STANDARD NO. BR-SS(7.01)-77-63 MOD. SHEET 1 OF 1

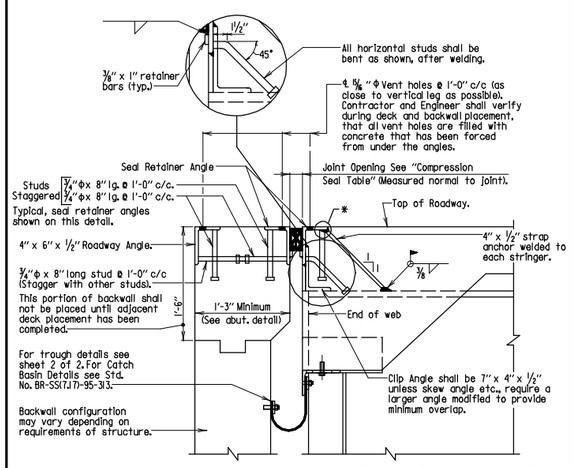

* After all welding of anchor straps is complete, Contractor shall thoroughly clean all damaged areas. All areas that will be exposed shall be recoated to the satisfaction of the Engineer.

SECTION
Scale: 1" = 1'-0"

Notes:
1. New bridge details shown.
2. See Standard No. BR-SS(8.06)-78-72 showing special attachment of new clip angle.
3. Compression seal to be placed in one continuous piece, after joint angles are set, and deck and entire backwall are in place.
4. See Standard No. BR-SS(7.01)-77-63 and BR-SS(8.02)-75-4 for additional details.
5. Ship and erect seal retaining angles as a unit.

APPROVAL
DIRECTOR OFFICE OF STRUCTURES
DATE: 12/12/79
REVISIONS
SHA FHWA
9-17-98
1-7-02
11-18-04
7-19-06

FHWA APPROVAL DATE: 4-4-80

STATE OF MARYLAND
DEPARTMENT OF TRANSPORTATION
STATE HIGHWAY ADMINISTRATION
OFFICE OF STRUCTURES

COMPRESSION SEAL ROADWAY JOINTS AT ABUTMENTS

STANDARD NO. BR-SS(7.02)-79-64 SHEET 1 OF 2

SUPER-ROADWAY JOINTS

MARYLAND TRANSPORTATION AUTHORITY

Engineering Division

I-95 FROM MORAVIA ROAD TO THE FORT McHENRY TUNNEL - PHASE 1 - SOUTHBOUND

I-95 (BALTIMORE CITY)

MD SHA STANDARDS DETAILS FOR STRUCTURES

DESIGNED BY	DRAWN BY	CHECKED BY
CONST. REVIEW BY	DATE DECEMBER 2009	SCALE AS SHOWN

ADDENDUMS & REVISIONS

NO.	DESCRIPTION	BY	DATE

CONTRACT NO. FT 928-000-006

DRAWING NO. **STD-4**

SHEET NO. 151 OF 188

r:\49562\dgn\Stds\stds.dgn Friday, December 04, 2009 AT 03:00 PM

FILE: r:\49562\dgn\Stds\stds.dgn
DATE: Friday, December 04, 2009 AT 03:00 PM

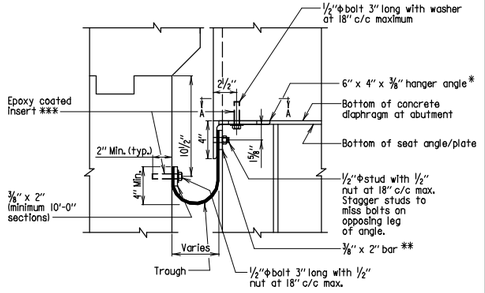

* 6"x4"x 3/8" hanger angle extends from seat angle/plate to seat angle/plate of adjacent stringer. Extend vertical leg of angle beyond exterior stringer to support trough. See Section A-A.

** Bar discontinuous at stringer web. See Section A-A.

*** At the Contractor's option drilled anchor inserts or cast-in-place studs may be used. No additional compensation will be allowed for either of these options.

SECTION
Scale: 1 1/2" = 1'-0"

After trough is in place move 6" x 4" hanger angles back to tighten trough against stringer web.

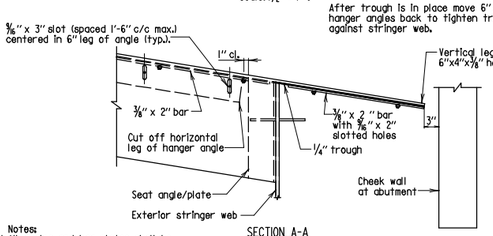

SECTION A-A
Scale: 3/4" = 1'-0"

Notes:
1. All angles and bar plates shall be unpainted ASTM A 709 Grade 36 galvanized steel. At the Contractor's option, fiberglass conforming to 921.11 may be substituted for the steel hanger angle. No additional compensation will be allowed for this option.
2. All bolts, studs, and nuts shall be unpainted ASTM A 709 Grade 36 galvanized steel.
3. Trough material shall conform to 911.11.
4. Holes in trough material shall be drilled in the field.

APPROVAL		
DIRECTOR OFFICE OF STRUCTURES DATE: 11/14/95		STATE OF MARYLAND DEPARTMENT OF TRANSPORTATION STATE HIGHWAY ADMINISTRATION OFFICE OF STRUCTURES
REVISIONS		NEOPRENE TROUGH DETAILS FOR COMPRESSION SEAL ROADWAY JOINTS AT ABUTMENTS
SHA	FHWA	
8-7-98		
2-14-00		
1-22-01		
1-18-05		
FHWA APPROVAL DATE:		STANDARD NO. BR-SS(7.02)-79-64 SHEET 2 OF 2

SUPER-ROADWAY JOINTS

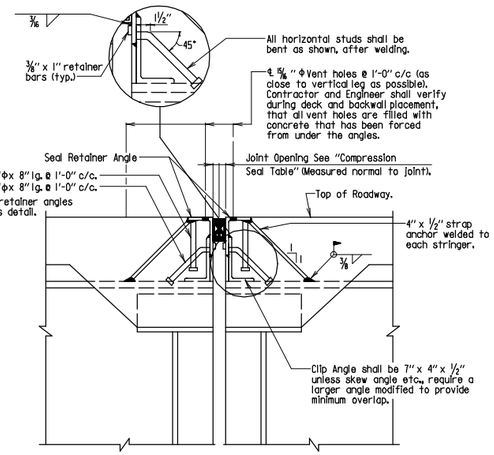

SECTION
Scale: 1" = 1'-0"

Notes:
1. New bridge details shown.
2. See Standard No. BR-SS(8.06)-78-72 showing special attachment of new clip angle.
3. Compression seal to be placed after joint angles are set, and deck is placed.
4. See Standard No. BR-SS(7.01)-77-63 and BR-SS(8.02)-75-4 for additional details.
5. Ship and erect seal retaining angles as a unit.

APPROVAL		
DIRECTOR OFFICE OF STRUCTURES DATE: 12/12/79		STATE OF MARYLAND DEPARTMENT OF TRANSPORTATION STATE HIGHWAY ADMINISTRATION OFFICE OF STRUCTURES
REVISIONS		COMPRESSION SEAL ROADWAY JOINTS AT PIERS
SHA	FHWA	
9-24-96		
11-17-97		
1-7-02		
7-19-06		
FHWA APPROVAL DATE: 4-4-80		STANDARD NO. BR-SS(7.03)-79-65 SHEET 1 OF 1

SUPER-ROADWAY JOINTS

Note:
Parapet configuration varies - see Typical Section.

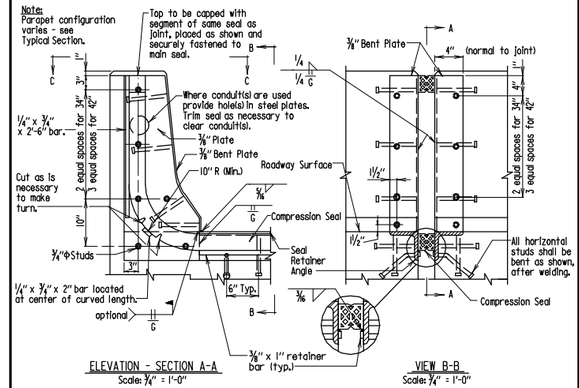

ELEVATION - SECTION A-A
Scale: 3/4" = 1'-0"

VIEW B-B
Scale: 3/4" = 1'-0"

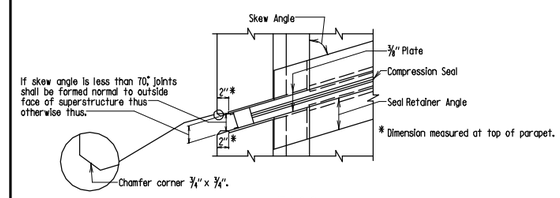

VIEW C-C
Scale: 3/4" = 1'-0"

34" OR 42" PARAPET

Note:
1. 34" F-shape parapet shown. 42" F-shape parapet similar with differences as noted.
2. All studs shall 3/4"Φ-8" long.
3. Section A-A & B-B shown 90° skew.
4. All material to be ASTM A 709 Grade 36.

APPROVAL		
DIRECTOR OFFICE OF STRUCTURES DATE: 12/12/79		STATE OF MARYLAND DEPARTMENT OF TRANSPORTATION STATE HIGHWAY ADMINISTRATION OFFICE OF STRUCTURES
REVISIONS		FULL HEIGHT COMPRESSION SEAL ROADWAY JOINT FOR 34" OR 42" F-SHAPE PARAPET
SHA	FHWA	
7-24-01		
1-7-02		
10-22-03		
4-21-04		
FHWA APPROVAL DATE: 4-4-80		STANDARD NO. BR-SS(7.08)-03-97 SHEET 1 OF 1

SUPER-ROADWAY JOINTS

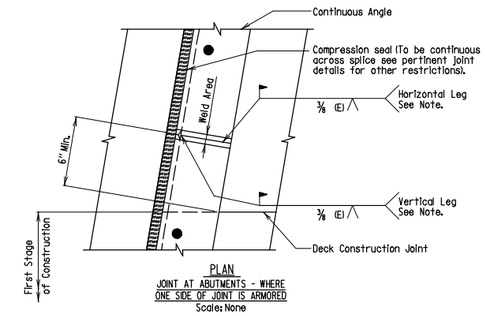

PLAN
JOINT AT ABUTMENTS - WHERE ONE SIDE OF JOINT IS ARMORED
Scale: None

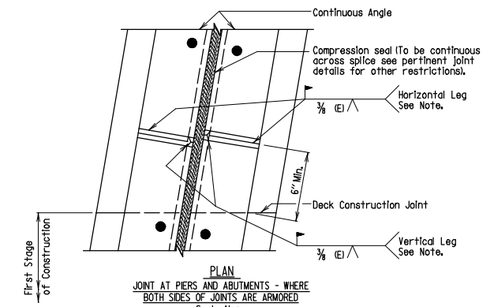

PLAN
JOINT AT PIERS AND ABUTMENTS - WHERE BOTH SIDES OF JOINTS ARE ARMORED
Scale: None

Notes:
The minimum effective throat (E) shall be determined by the angle thickness as follows:
Min. E = 3/8" for thicknesses over 1/4" to 1/2" incl.
Min. E = 1/4" for thicknesses over 1/2" to 3/4" incl.

APPROVAL		
DIRECTOR OFFICE OF STRUCTURES DATE: 7/28/80		STATE OF MARYLAND DEPARTMENT OF TRANSPORTATION STATE HIGHWAY ADMINISTRATION OFFICE OF STRUCTURES
REVISIONS		ROADWAY JOINT SPLICES FOR SEQUENTIAL CONSTRUCTION
SHA	FHWA	
9-9-82	6-27-83	
6-28-84	11-8-84	
4-10-86	6-8-90	
9-3-86	6-8-90	
FHWA APPROVAL DATE: 10-3-80		STANDARD NO. BR-SS(7.09)-80-113 SHEET 1 OF 1

SUPER-ROADWAY JOINTS

GENERAL NOTES

Specifications: Latest Specifications and Special Provisions for materials and construction. Latest AASHTO Standard Specifications for Highway Bridges for design.

Materials: Drainage trough shall conform to 911.11.

Fusion bonded epoxy powder coatings for steel shall conform to 917.02.

Catch basins shall be fiberglass conforming to 921.11.*

Downspouts shall be fiberglass.

Stainless steel bolts shall conform to ASTM A 193, Identification Symbol B 8, Type 304.

Measurement and Payment: Catch basins, downspouts, troughs, etc. will be measured and paid for as specified in 460.04.

* Contractor may substitute stainless steel (10 gauge min.) or galvanized steel (10 gauge min.) catch basins in lieu of fiberglass, at no additional cost to the Administration.

APPROVAL		
DIRECTOR OFFICE OF STRUCTURES DATE: 11/15/95		STATE OF MARYLAND DEPARTMENT OF TRANSPORTATION STATE HIGHWAY ADMINISTRATION OFFICE OF STRUCTURES
REVISIONS		DRAINAGE TROUGH CATCH BASIN GENERAL NOTES
SHA	FHWA	
1-22-01		
10-17-02		
5-10-05		
7-14-08		
FHWA APPROVAL DATE:		STANDARD NO. BR-SS(7.17)-95-3.13 SHEET 1 OF 5

SUPER-ROADWAY JOINTS

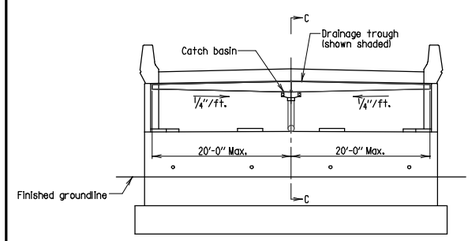

DRAINAGE TROUGH LAYOUT
Scale: 1/8" = 1'-0"

Note:
Actual layout of trough and catch basin may need to be modified to accommodate bridge skew angle, super elevation, stringer location, etc.

Catch Basin Type A shown. When preparing shop drawings Contractor shall indicate which type catch basin is appropriate for each location. The Contract price shall prevail regardless of catch basin type utilized.

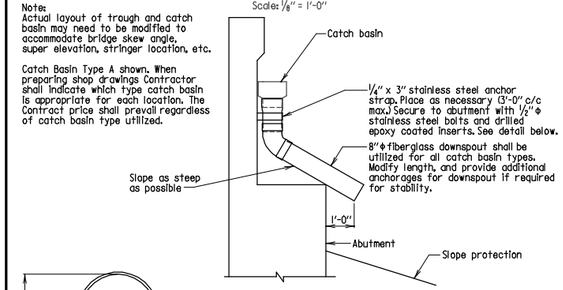

SECTION C-C
Scale: 3/8" = 1'-0"

Note:
Designer shall detail exact location of troughs and downspouts on Contract Drawings.

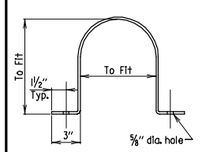

ANCHOR STRAP DETAIL
Scale: 1 1/2" = 1'-0"

APPROVAL		
DIRECTOR OFFICE OF STRUCTURES DATE: 11/15/95		STATE OF MARYLAND DEPARTMENT OF TRANSPORTATION STATE HIGHWAY ADMINISTRATION OFFICE OF STRUCTURES
REVISIONS		DRAINAGE TROUGH CATCH BASIN CATCH BASIN LOCATION DETAILS
SHA	FHWA	
10-17-02		
10-22-03		
5-10-05		
7-14-08		
FHWA APPROVAL DATE:		STANDARD NO. BR-SS(7.17)-95-3.13 SHEET 2 OF 5

SUPER-ROADWAY JOINTS

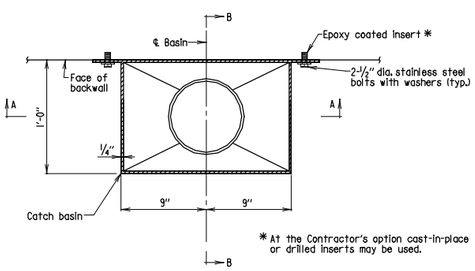

DRAINAGE TROUGH CATCH BASIN
Scale: 1 1/2" = 1'-0"

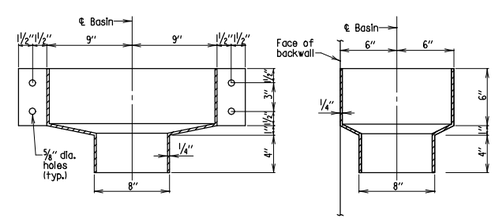

SECTION A-A
Scale: 1 1/2" = 1'-0"

SECTION B-B
Scale: 1 1/2" = 1'-0"

APPROVAL		
DIRECTOR OFFICE OF STRUCTURES DATE: 11/15/95		STATE OF MARYLAND DEPARTMENT OF TRANSPORTATION STATE HIGHWAY ADMINISTRATION OFFICE OF STRUCTURES
REVISIONS		DRAINAGE TROUGH CATCH BASIN - TYPE A DETAILS
SHA	FHWA	
10-17-02		
5-10-05		
FHWA APPROVAL DATE:		STANDARD NO. BR-SS(7.17)-95-3.13 SHEET 3 OF 5

SUPER-ROADWAY JOINTS

MARYLAND TRANSPORTATION AUTHORITY

Engineering Division

I-95 FROM MORAVIA ROAD TO THE FORT McHENRY TUNNEL - PHASE 1 - SOUTHBOUND

I-95 (BALTIMORE CITY)

MD SHA STANDARDS DETAILS FOR STRUCTURES

DESIGNED BY	DRAWN BY	CHECKED BY
CONST. REVIEW BY	DATE DECEMBER 2009	SCALE AS SHOWN

ADDENDUMS & REVISIONS

NO.	DESCRIPTION	BY	DATE

CONTRACT NO. FT 928-000-006

DRAWING NO. **STD-5**

SHEET NO. 152 OF 188

r:\49562\dgn\Stds\stds.dgn Friday, December 04, 2009 AT 03:00 PM

FILE: r:\49562\dgn\Stds\stds.dgn
DATE: Friday, December 04, 2009 AT 03:00 PM

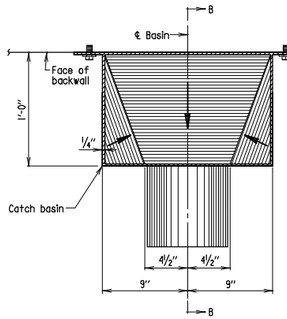

DRAINAGE TROUGH CATCH BASIN
Scale: 1 1/2" = 1'-0"

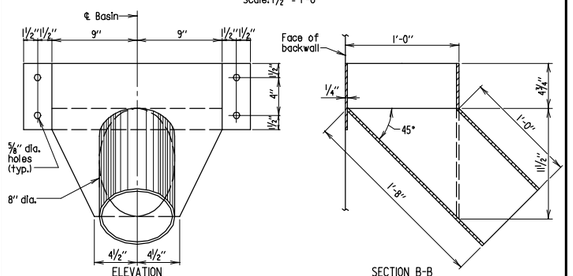

ELEVATION
Scale: 1 1/2" = 1'-0"

SECTION B-B
Scale: 1 1/2" = 1'-0"

APPROVAL		STATE OF MARYLAND DEPARTMENT OF TRANSPORTATION STATE HIGHWAY ADMINISTRATION OFFICE OF STRUCTURES	
DIRECTOR OFFICE OF STRUCTURES DATE: 10/17/02		DRAINAGE TROUGH CATCH BASIN - TYPE B DETAILS	
REVISIONS SHA FHWA 5-10-05		STANDARD NO. BR-SS(7.17)-95-3\3	SHEET 4 OF 5
FHWA APPROVAL DATE:			

SUPER-ROADWAY JOINTS

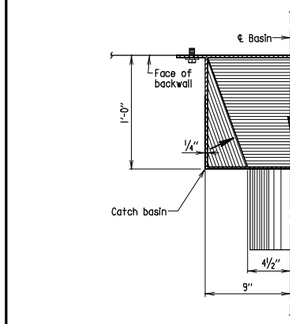

DRAINAGE TROUGH CATCH BASIN
Scale: 1 1/2" = 1'-0"

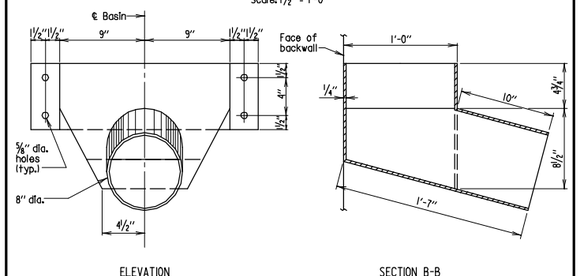

ELEVATION
Scale: 1 1/2" = 1'-0"

SECTION B-B
Scale: 1 1/2" = 1'-0"

APPROVAL		STATE OF MARYLAND DEPARTMENT OF TRANSPORTATION STATE HIGHWAY ADMINISTRATION OFFICE OF STRUCTURES	
DIRECTOR OFFICE OF STRUCTURES DATE: 10/17/02		DRAINAGE TROUGH CATCH BASIN - TYPE C DETAILS	
REVISIONS SHA FHWA 5-10-05		STANDARD NO. BR-SS(7.17)-95-3\3	SHEET 5 OF 5
FHWA APPROVAL DATE:			

SUPER-ROADWAY JOINTS

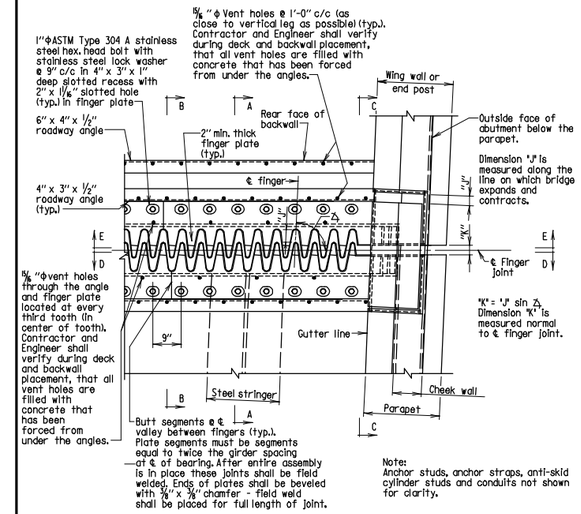

Note:
Anchor studs, anchor straps, anti-skid cylinder studs and conduits not shown for clarity.

PLAN AT ROADWAY LEVEL
Scale: 1/2" = 1'-0"

Note:
℄ finger is parallel to the direction of superstructure movement.

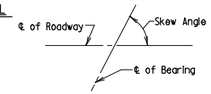

SKEW ANGLE
Scale: None

Notes:
1. For dimensions "J" & "K" and finger plate thickness see Sheet No. 13 of 13.
2. For SECTIONS A-A, B-B, C-C, D-D & E-E see Sheet Nos. 3, 4, 5, 6 & 7 of 13.

APPROVAL		STATE OF MARYLAND DEPARTMENT OF TRANSPORTATION STATE HIGHWAY ADMINISTRATION OFFICE OF STRUCTURES	
DIRECTOR OFFICE OF STRUCTURES DATE: 8/19/04		FINGER JOINT DETAILS (42" F-SHAPE PARAPET) FOR BRIDGES WITH STEEL STRINGERS WITH SKEW ANGLES BETWEEN 50° AND 90°	
REVISIONS SHA FHWA 10-17-05 7-19-06		NO. BR-SS(7.18)-04-321B	SHEET 1 OF 13
FHWA APPROVAL DATE:			

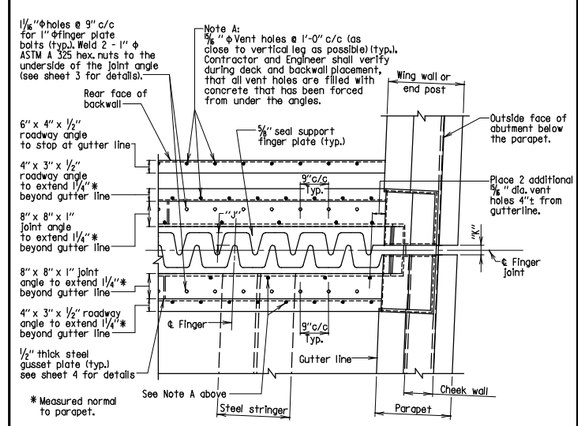

Note:
Anchor studs, anchor straps & conduits not shown for clarity.
℄ finger is parallel to the direction of superstructure movement. Dimension "J" is measured along ℄ finger.

PLAN WITH ROADWAY FINGER PLATES, PARAPET SLIDING PLATE AND FOAM SEAL REMOVED
Scale: 1/2" = 1'-0"

Notes:
1. All details not indicated are the same as Plan at Roadway Level on Sheet No. 1 of 13.
2. For dimensions "J" & "K" see Sheet No. 13 of 13.

APPROVAL		STATE OF MARYLAND DEPARTMENT OF TRANSPORTATION STATE HIGHWAY ADMINISTRATION OFFICE OF STRUCTURES	
DIRECTOR OFFICE OF STRUCTURES DATE: 8/19/04		FINGER JOINT DETAILS (42" F-SHAPE PARAPET) FOR BRIDGES WITH STEEL STRINGERS WITH SKEW ANGLES BETWEEN 50° AND 90°	
REVISIONS SHA FHWA 10-17-05 7-19-06		NO. BR-SS(7.18)-04-321B	SHEET 2 OF 13
FHWA APPROVAL DATE:			

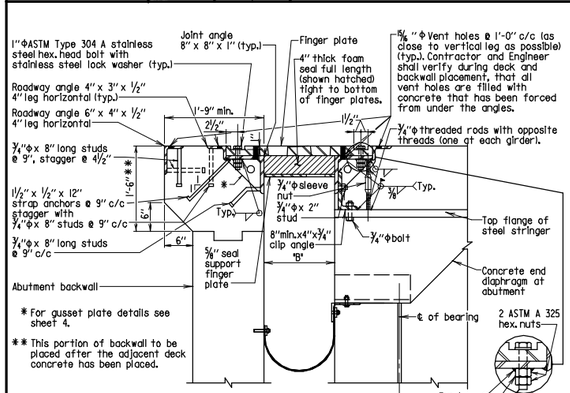

SECTION A-A
TYPICAL SECTION AT STRINGERS
Scale: 3/4" = 1'-0"

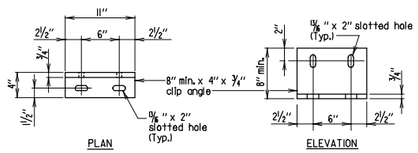

PLAN
ELEVATION

CLIP ANGLE DETAILS
Scale: 1" = 1'-0"

Notes:
1. Finger joint to be fabricated, assembled and shipped to the job site fully assembled.
2. The fully assembled joint shall be installed, bolted and welded into its final position.
3. During concrete deck placement: "CONCRETE MUST APPEAR AT THE TOP OF THE FINGER PLATE INDICATING THAT CONCRETE HAS FILLED THE VOID AREA".
4. For material specifications and requirements, see Special Provisions.
5. For finger plate thickness and dimension "B", see Sheet no. 13 of 13.
6. For details of drainage trough, see Standard No. BR-SS(7.02)-79-64.

APPROVAL		STATE OF MARYLAND DEPARTMENT OF TRANSPORTATION STATE HIGHWAY ADMINISTRATION OFFICE OF STRUCTURES	
DIRECTOR OFFICE OF STRUCTURES DATE: 8/19/04		FINGER JOINT DETAILS (42" F-SHAPE PARAPET) FOR BRIDGES WITH STEEL STRINGERS WITH SKEW ANGLES BETWEEN 50° AND 90°	
REVISIONS SHA FHWA 10-17-05 7-19-06		STANDARD NO. BR-SS(7.18)-04-321B	SHEET 3 OF 13
FHWA APPROVAL DATE:			

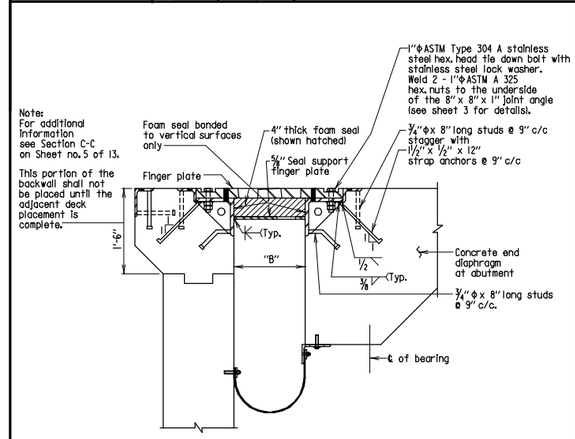

SECTION B-B
TYPICAL SECTION BETWEEN STRINGERS
Scale: 3/4" = 1'-0"

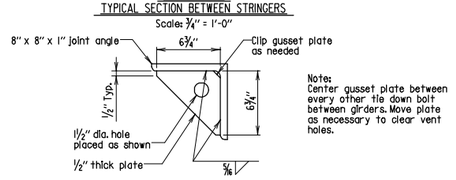

Note:
Center gusset plate between every other tie down bolt between girders. Move plate as necessary to clear vent holes.

GUSSET PLATE DETAILS
Scale: 1 1/2" = 1'-0"

Notes:
1. For finger plate thickness and dimension "B", see Sht. No. 13 of 13.
2. For details of drainage trough, see Standard No. BR-SS(7.02)-79-64.
3. For details not shown see Sheet. no. 3 of 13.

APPROVAL		STATE OF MARYLAND DEPARTMENT OF TRANSPORTATION STATE HIGHWAY ADMINISTRATION OFFICE OF STRUCTURES	
DIRECTOR OFFICE OF STRUCTURES DATE: 8/19/04		FINGER JOINT DETAILS (42" F-SHAPE PARAPET) FOR BRIDGES WITH STEEL STRINGERS WITH SKEW ANGLES BETWEEN 50° AND 90°	
REVISIONS SHA FHWA 10-17-05		STANDARD NO. BR-SS(7.18)-04-321B	SHEET 4 OF 13
FHWA APPROVAL DATE:			

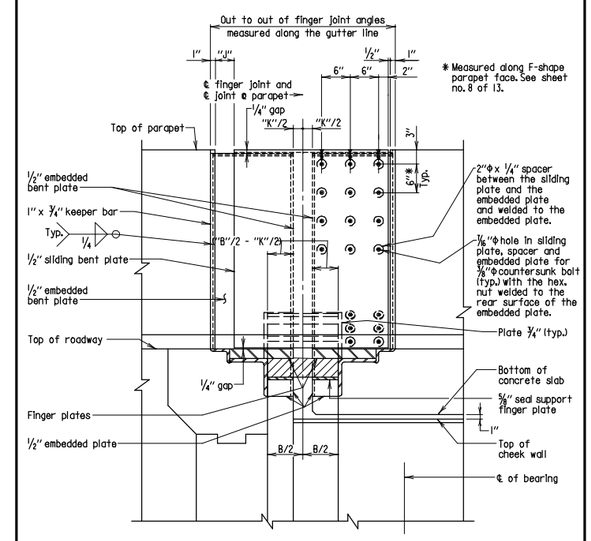

SECTION C-C
Scale: 3/4" = 1'-0"

Note:
For dimensions "B", "K", & "J" see Sheet No. 13 of 13.

APPROVAL		STATE OF MARYLAND DEPARTMENT OF TRANSPORTATION STATE HIGHWAY ADMINISTRATION OFFICE OF STRUCTURES	
DIRECTOR OFFICE OF STRUCTURES DATE: 8/19/04		FINGER JOINT DETAILS (42" F-SHAPE PARAPET) FOR BRIDGES WITH STEEL STRINGERS WITH SKEW ANGLES BETWEEN 50° AND 90°	
REVISIONS SHA FHWA		STANDARD NO. BR-SS(7.18)-04-321B	SHEET 5 OF 13
FHWA APPROVAL DATE:			

MARYLAND TRANSPORTATION AUTHORITY

Engineering Division

I-95 FROM MORAVIA ROAD TO THE FORT McHENRY TUNNEL - PHASE 1 - SOUTHBOUND

I-95 (BALTIMORE CITY)

MD SHA STANDARDS DETAILS FOR STRUCTURES

DESIGNED BY	DRAWN BY	CHECKED BY
CONST. REVIEW BY	DATE DECEMBER 2009	SCALE AS SHOWN

ADDENDUMS & REVISIONS

NO.	DESCRIPTION	BY	DATE

CONTRACT NO. FT 928-000-006

DRAWING NO. **STD-6**

SHEET NO. 153 OF 188

r:\49562\dgn\Stds\stds.dgn Friday, December 04, 2009 AT 03:00 PM

FILE: r:\49562\dgn\Stds\stds.dgn
DATE: Friday, December 04, 2009 AT 03:00 PM

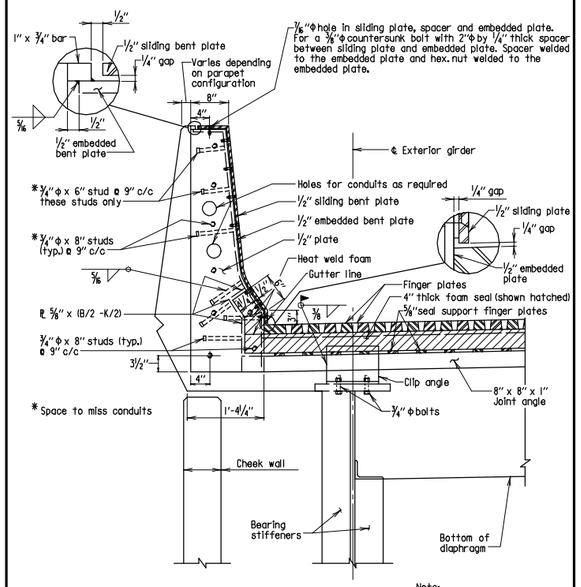

Note: Drainage trough not shown for clarity.

SECTION D-D
Scale: 3/4" = 1'-0"

Notes:
1. For parapet dimensions see BR-SS(6.25)-84-159B.
2. Diamond back parapet shown, for exact configuration see Typical Section.

APPROVAL — DIRECTOR OFFICE OF STRUCTURES — DATE: 8/19/04
REVISIONS: SHA FHWA 10-17-05
FHWA APPROVAL DATE:

STATE OF MARYLAND
DEPARTMENT OF TRANSPORTATION
STATE HIGHWAY ADMINISTRATION
OFFICE OF STRUCTURES

FINGER JOINT DETAILS (42" F-SHAPE PARAPET)
FOR BRIDGES WITH STEEL STRINGERS
WITH SKEW ANGLES BETWEEN 50° AND 90°

STANDARD NO. BR-SS(7.18)-04-321B SHEET 6 OF 13

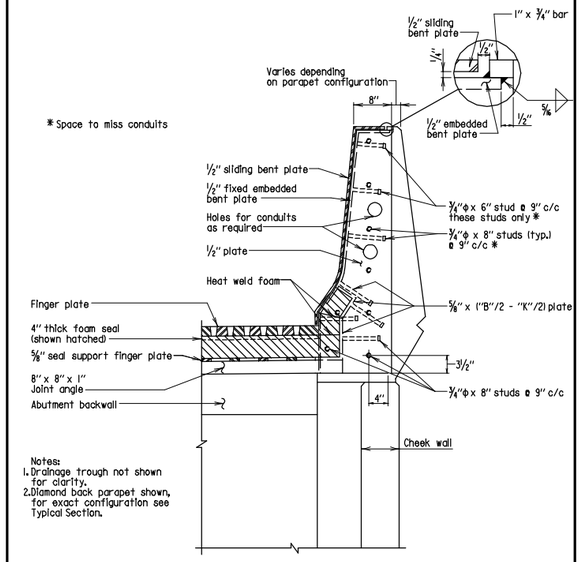

Notes:
1. Drainage trough not shown for clarity.
2. Diamond back parapet shown, for exact configuration see Typical Section.

SECTION E-E
Scale: 3/4" = 1'-0"

APPROVAL — DIRECTOR OFFICE OF STRUCTURES — DATE: 8/19/04
REVISIONS: SHA FHWA 10-17-05
FHWA APPROVAL DATE:

STATE OF MARYLAND
DEPARTMENT OF TRANSPORTATION
STATE HIGHWAY ADMINISTRATION
OFFICE OF STRUCTURES

FINGER JOINT DETAILS (42" F-SHAPE PARAPET)
FOR BRIDGES WITH STEEL STRINGERS
WITH SKEW ANGLES BETWEEN 50° AND 90°

STANDARD NO. BR-SS(7.18)-04-321B SHEET 7 OF 13

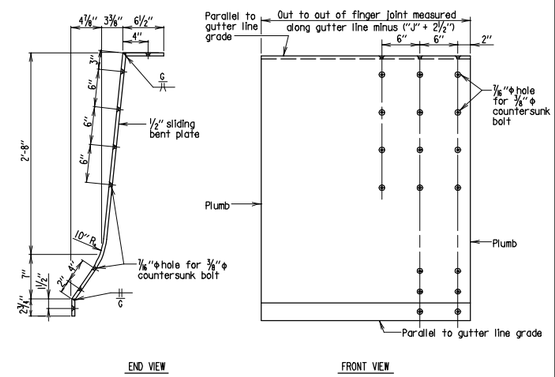

END VIEW — FRONT VIEW

SLIDING PLATE
Scale: 1" = 1'-0"

APPROVAL — DIRECTOR OFFICE OF STRUCTURES — DATE: 8/19/04
REVISIONS: SHA FHWA 10-17-05
FHWA APPROVAL DATE:

STATE OF MARYLAND
DEPARTMENT OF TRANSPORTATION
STATE HIGHWAY ADMINISTRATION
OFFICE OF STRUCTURES

FINGER JOINT DETAILS (42" F-SHAPE PARAPET)
FOR BRIDGES WITH STEEL STRINGERS
WITH SKEW ANGLES BETWEEN 50° AND 90°

STANDARD NO. BR-SS(7.18)-04-321B SHEET 8 OF 13

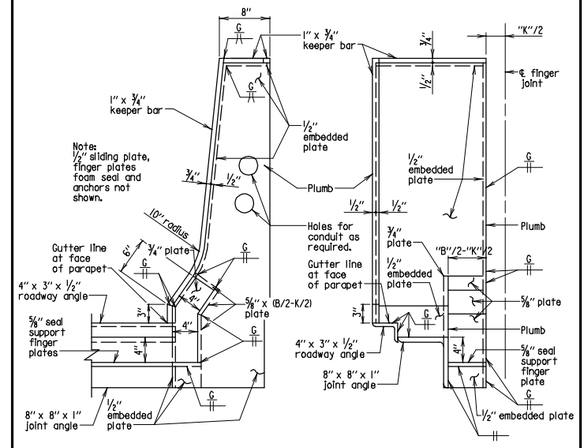

END VIEW FROM ℄ FINGER JOINT — FRONT VIEW

EMBEDDED PLATE - EXPANSION END
Scale: 1" = 1'-0"

APPROVAL — DIRECTOR OFFICE OF STRUCTURES — DATE: 8/19/04
REVISIONS: SHA FHWA 10-17-05
FHWA APPROVAL DATE:

STATE OF MARYLAND
DEPARTMENT OF TRANSPORTATION
STATE HIGHWAY ADMINISTRATION
OFFICE OF STRUCTURES

FINGER JOINT DETAILS (42" F-SHAPE PARAPET)
FOR BRIDGES WITH STEEL STRINGERS
WITH SKEW ANGLES BETWEEN 50° AND 90°

STANDARD NO. BR-SS(7.18)-04-321B SHEET 9 OF 13

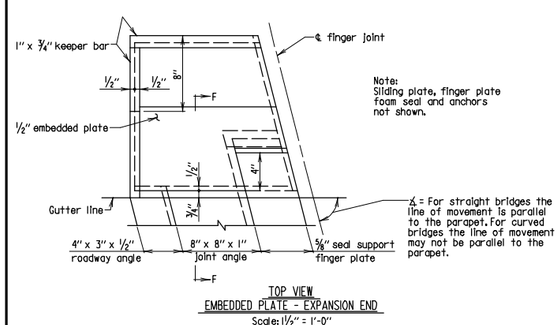

TOP VIEW
EMBEDDED PLATE - EXPANSION END
Scale: 1 1/2" = 1'-0"

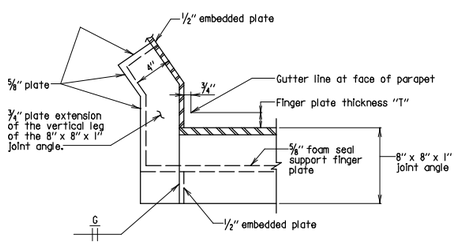

SECTION F-F
Scale: 1 1/2" = 1'-0"

APPROVAL — DIRECTOR OFFICE OF STRUCTURES — DATE: 8/19/04
REVISIONS: SHA FHWA 10-17-05
FHWA APPROVAL DATE:

STATE OF MARYLAND
DEPARTMENT OF TRANSPORTATION
STATE HIGHWAY ADMINISTRATION
OFFICE OF STRUCTURES

FINGER JOINT DETAILS (42" F-SHAPE PARAPET)
FOR BRIDGES WITH STEEL STRINGERS
WITH SKEW ANGLES BETWEEN 50° AND 90°

STANDARD NO. BR-SS(7.18)-04-321B SHEET 10 OF 13

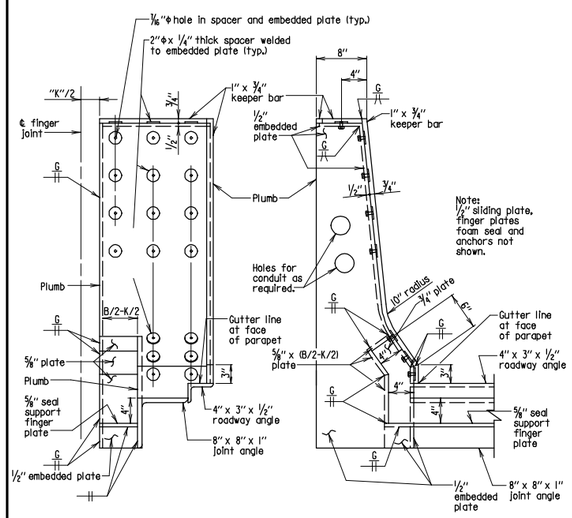

FRONT VIEW — END VIEW FROM ℄ FINGER JOINT

EMBEDDED PLATE - FIXED END
Scale: 1" = 1'-0"

APPROVAL — DIRECTOR OFFICE OF STRUCTURES — DATE: 8/19/04
REVISIONS: SHA FHWA 10-17-05
FHWA APPROVAL DATE:

STATE OF MARYLAND
DEPARTMENT OF TRANSPORTATION
STATE HIGHWAY ADMINISTRATION
OFFICE OF STRUCTURES

FINGER JOINT DETAILS (42" F-SHAPE PARAPET)
FOR BRIDGES WITH STEEL STRINGERS
WITH SKEW ANGLES BETWEEN 50° AND 90°

STANDARD NO. BR-SS(7.18)-04-321B SHEET 11 OF 13

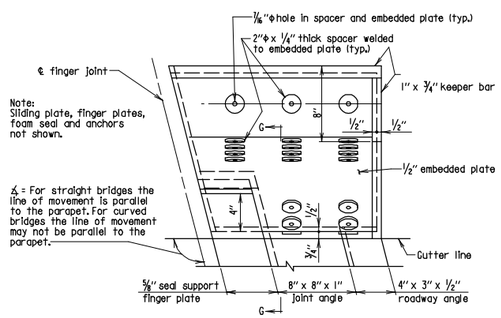

TOP VIEW
EMBEDDED PLATE - FIXED END
Scale: 1 1/2" = 1'-0"

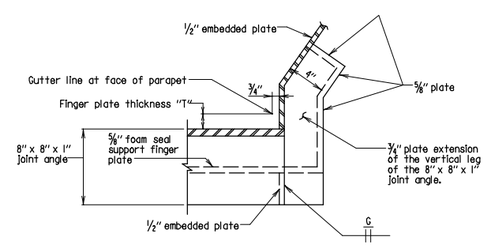

SECTION G-G
Scale: 1 1/2" = 1'-0"

APPROVAL — DIRECTOR OFFICE OF STRUCTURES — DATE: 8/19/04
REVISIONS: SHA FHWA 10-17-05
FHWA APPROVAL DATE:

STATE OF MARYLAND
DEPARTMENT OF TRANSPORTATION
STATE HIGHWAY ADMINISTRATION
OFFICE OF STRUCTURES

FINGER JOINT DETAILS (42" F-SHAPE PARAPET)
FOR BRIDGES WITH STEEL STRINGERS
WITH SKEW ANGLES BETWEEN 50° AND 90°

STANDARD NO. BR-SS(7.18)-04-321B SHEET 12 OF 13

MARYLAND TRANSPORTATION AUTHORITY
Engineering Division

I-95 FROM MORAVIA ROAD TO THE FORT McHENRY TUNNEL - PHASE 1 - SOUTHBOUND

I-95 (BALTIMORE CITY)

MD SHA STANDARDS DETAILS FOR STRUCTURES

DESIGNED BY K.A.	DRAWN BY J.E.	CHECKED BY D.W.
CONST. REVIEW BY	DATE DECEMBER 2009	SCALE AS SHOWN

ADDENDUMS & REVISIONS

NO.	DESCRIPTION	BY	DATE

CONTRACT NO. FT 928-000-006

DRAWING NO. **STD-7**

SHEET NO. 154 OF 188

r:\49562\dgn\Stds\stds.dgn Friday, December 04, 2009 AT 02:59 PM

FILE: r:\49562\dgn\Stds\stds.dgn
DATE: Friday, December 04, 2009 AT 02:59 PM

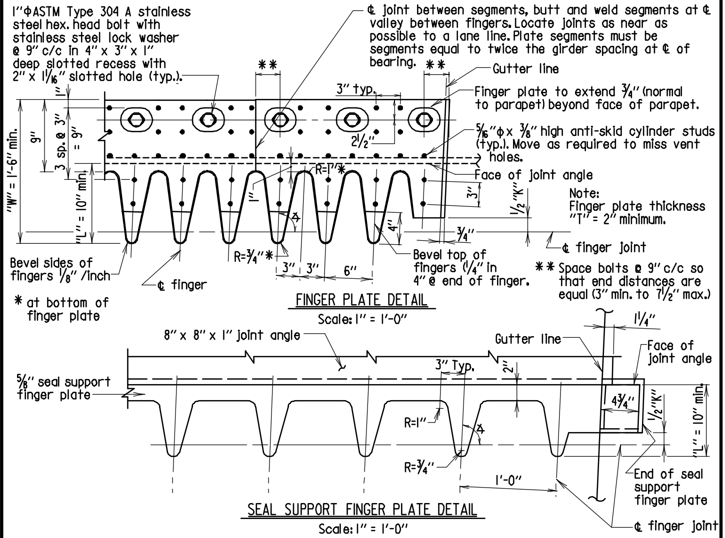

JOINT OPENING TABLE (INCHES)							
LOCATION OF JOINT		JOINT OPENING AT					
		40° F.	50° F.	60° F.	70° F.	80° F.	90° F.
	J						
	K						
	B						

"J" = Finger plate opening along ℄ of finger (See Sheet No. 1 of 13)

"K" = Finger plate opening normal to ℄ of joint (See Sheet No. 1 of 13)

"B" = Joint opening between joint angles normal to ℄ of joint (See Sheet No. 3 of 13)

"∡" = Skew Angle of straight bridges, angle along which the bridge expands, and contracts for curved bridges.

"T" = ________

"L" = ________

"W" = ________

"∡" = ________

APPROVAL: DIRECTOR, OFFICE OF STRUCTURES. DATE: 8/19/04. REVISIONS: SHA 10-17-05. FHWA APPROVAL / DATE:

STATE OF MARYLAND
DEPARTMENT OF TRANSPORTATION
STATE HIGHWAY ADMINISTRATION
OFFICE OF STRUCTURES

FINGER JOINT DETAILS (42" F-SHAPE PARAPET) FOR BRIDGES WITH STEEL STRINGERS WITH SKEW ANGLES BETWEEN 50° AND 90°

STANDARD NO. BR-SS(7.18)-04-321B — SHEET 13 OF 13

SUPER-ROADWAY JOINTS

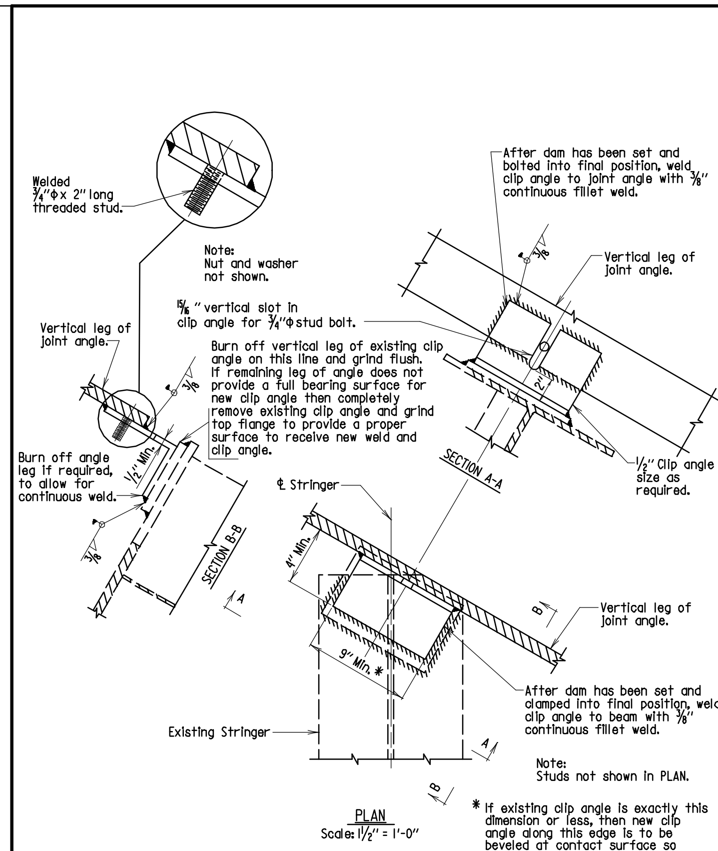

Note:
Existing members shown dashed.

APPROVAL: DIRECTOR, OFFICE OF STRUCTURES. DATE: 4/12/78. REVISIONS: SHA 2-23-93, 2-17-94, 5-24-01, 7-24-01. FHWA APPROVAL DATE: 10-17-78

STATE OF MARYLAND
DEPARTMENT OF TRANSPORTATION
STATE HIGHWAY ADMINISTRATION
OFFICE OF STRUCTURES

ROADWAY JOINT - CLIP ANGLE DETAIL DECK REPLACEMENT - EXISTING STRINGER

STANDARD NO. BR-SS(8.06)-78-72 — SHEET 1 OF 1

SUPERSTRUCTURE-STEEL

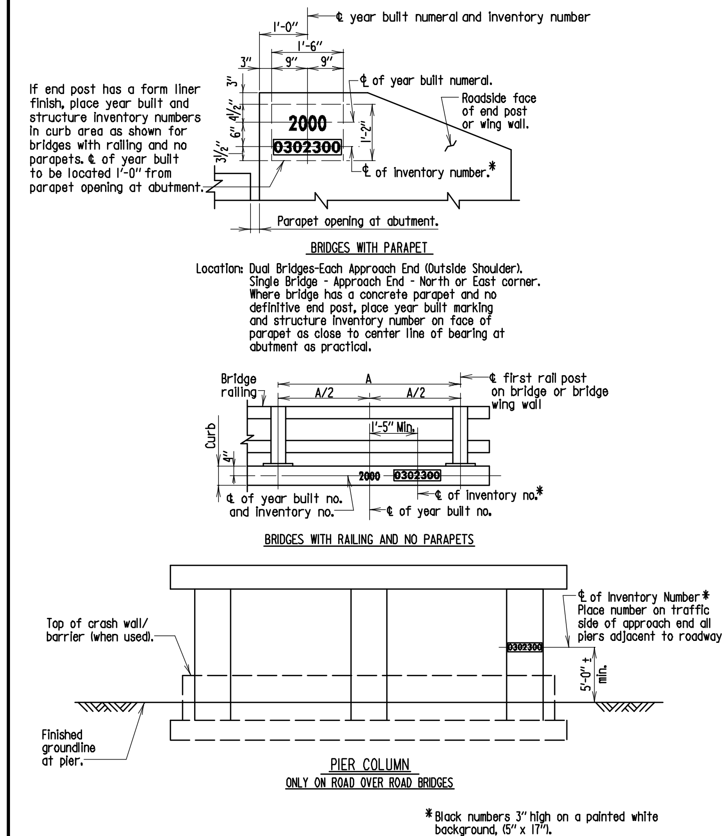

Notes:
1. For existing structures, where a year built is shown on the structure and structure is to be rehabilitated, the marking should read 1942-2000 (old year first - new year).
2. For existing structures with no year built contact the Office of Structures for old year.
3. For Year Built Numerals refer to Standard No. M(0.07)-99-334.

APPROVAL: DIRECTOR, OFFICE OF STRUCTURES. DATE: 9/14/99. REVISIONS: SHA 3-10-00, 12-7-00, 1-22-01. FHWA APPROVAL / DATE:

STATE OF MARYLAND
DEPARTMENT OF TRANSPORTATION
STATE HIGHWAY ADMINISTRATION
OFFICE OF STRUCTURES

LOCATION OF YEAR BUILT MARKING AND STRUCTURE INVENTORY NUMBER ON BRIDGES

STANDARD NO. M(0.04)-99-331 — SHEET 1 OF 1

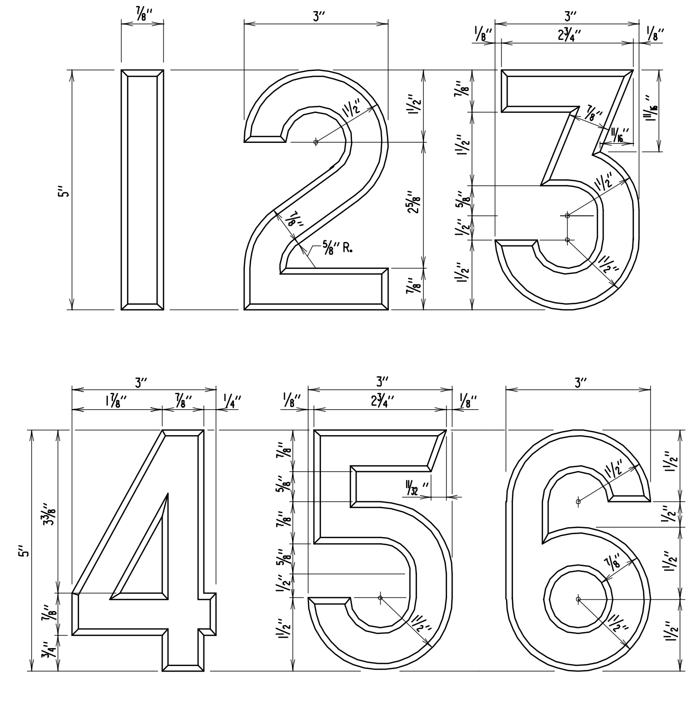

Note:
Year built numerals to be indented into concrete (unpainted) - as indicated on Standard Nos. M(0.04)-99-331, M(0.05)-99-332 and M(0.06)-99-333.

APPROVAL: DIRECTOR, OFFICE OF STRUCTURES. DATE: 9/14/99. REVISIONS: SHA / FHWA. FHWA APPROVAL / DATE:

STATE OF MARYLAND
DEPARTMENT OF TRANSPORTATION
STATE HIGHWAY ADMINISTRATION
OFFICE OF STRUCTURES

NUMERALS FOR YEAR BUILT MARKING ON STRUCTURES

STANDARD NO. M(0.07)-99-334 — SHEET 1 OF 2

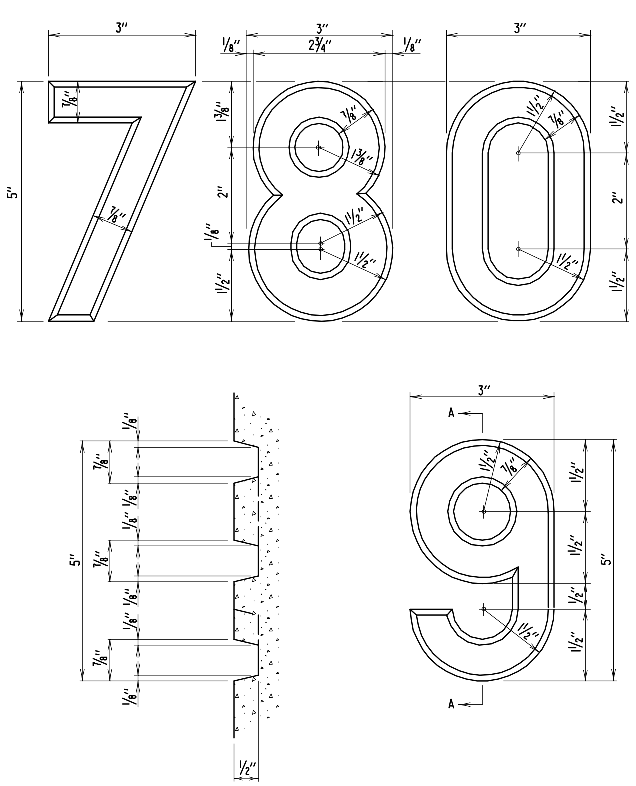

SECTION A-A

APPROVAL: DIRECTOR, OFFICE OF STRUCTURES. DATE: 9/14/99. REVISIONS: SHA / FHWA. FHWA APPROVAL / DATE:

STATE OF MARYLAND
DEPARTMENT OF TRANSPORTATION
STATE HIGHWAY ADMINISTRATION
OFFICE OF STRUCTURES

NUMERALS FOR YEAR BUILT MARKING ON STRUCTURES

STANDARD NO. M(0.07)-99-334 — SHEET 2 OF 2

GENERAL NOTES

Concrete: All concrete shall conform to Mix. No. 6 (4500 psi).

Welded Steel Wire Fabric: All wire fabric shall be 6 x 6 - W2.9 x W2.9.

Reinforcing Steel: Reinforcing steel shall conform to ASTM A 615 Grade 60.

Structural Steel: All structural steel conform to ASTM A 709 Grade 36 or better.

Anchor Bolts: All anchor bolts shall be ASTM A 325 unless otherwise specified on details.

Connector Loop: 3/4"Φ galvanized or stainless steel rod. Stainless steel rods shall conform to ASTM A 276 for the type specified, galvanizing shall conform to ASTM A 153.

Connector Pin: The 1 1/4" x 25" connector pin shall be a threaded rod or bolt conforming to ASTM A 307, Grade A. Nuts shall conform to ASTM A 563, Grade DH or DH3 or ASTM A 94, Grade 2H. Washers shall conform to ASTM F 436. The connector pin, nuts and washers shall be galvanized in conformance with ASTM A 153.

Other Connector Devices: Contractor may use any other connection devices between barrier sections in lieu of the pin and loop, provided they appear on S.H.A. standard plates and have written approval of Chief Engineer.

Temporary Shield: When specified on the Plans, a shield shall be connected to the temporary precast concrete barrier. The shield shall be designed, furnished, and installed by the Contractor. The height of the shield shall be 6 ft - 6 in. above the roadway surface, and shall have no cracks or openings through which material or debris can pass. The shield will not be measured but the cost will be incidental to the pertinent Temporary Concrete Traffic Barrier for Maintenance of Traffic item.

METHODS OF ANCHORAGE CONNECTION TO CONCRETE DECKS

EXISTING BRIDGE DECK TO BE REMOVED.
Holes for anchor bolts in existing bridge deck shall be drilled. Use 1 1/4"Φ bolts with 5 1/2" x 5 1/2" x 3/4" square washer under existing deck slab, as shown. Bolts shall be of sufficient length that when nut is tight, all the threads of the nut are engaged. Provide Type 'A' plain washer SAE N (narrow) for each 1 1/4"Φ bolt at connection plate.

EXISTING BRIDGE DECK TO REMAIN.
Holes for anchor bolts in existing bridge deck shall be cored. Use 1 1/4"Φ bolts with 5 1/2" x 5 1/2" x 3/4" square washer under existing deck slab, as shown. Bolts shall be of sufficient length that when nut is tight, all the threads of the nut are engaged. Provide Type 'A' plain washer SAE N (narrow) for each 1 1/4" bolt at connection plate. The Contractor is alerted that as little damage as possible shall be done to the existing reinforcement steel. Therefore, the Contractor shall locate the reinforcement steel and space the bolts to miss the reinforcement steel, all as directed by the Engineer. Fill all cored holes with epoxy grout after barrier is removed. (See below for grout composition).

NEW BRIDGE DECK
1 1/4"Φ bolt to be placed in an epoxy coated open coil anchor insert (cast in slab) having a minimum working load tension strength of 16 000 lb and shear strength of 13 000 lb with a minimum 7 1/2" length. Coil to be tapped for a 1 1/4" N.C. thread bolt. No insert shall be longer than slab depth minus 1". Provide Type 'A' plain washer SAE N (narrow) for each 1 1/4"Φ bolt at connection plate. Fill all inserts with epoxy grout after barrier is removed. (See below for grout composition).

The Contractor may opt to utilize a 1 1/4"Φ bolt placed in a 1 3/8"Φ drilled hole filled with high strength resin in lieu of the coil insert. The anchorage system shall meet the same strength properties as specified for the coil inserts verified by pullout tests monitored by the SHA's Office of Materials and Technology.

GROUT COMPOSITION
Any areas of bridge decks, to remain in place, damaged as a result of anchoring temporary concrete barriers (anchor holes, etc.) shall be repaired to the satisfaction of the Engineer using an epoxy grout conforming to 902.11 (d).

Note:
The Contractor has the option of using either Jersey barrier or Type F barrier made prior to May 1, 2004 or this Type F barrier for temporary barrier until July 1, 2006, so long as only one type of barrier is used on this project.

APPROVAL: DIRECTOR, OFFICE OF STRUCTURES. DATE: 6/15/84. REVISIONS: SHA 5-21-04, 6-28-04, 8-5-04, 11-29-04. FHWA APPROVAL DATE: 1-23-85

STATE OF MARYLAND
DEPARTMENT OF TRANSPORTATION
STATE HIGHWAY ADMINISTRATION
OFFICE OF STRUCTURES

TEMPORARY PRECAST DOUBLE FACE F-TYPE CONCRETE BARRIER

STANDARD NO. M(5.10)-84-158 — SHEET 1 OF 4

MISCELLANEOUS

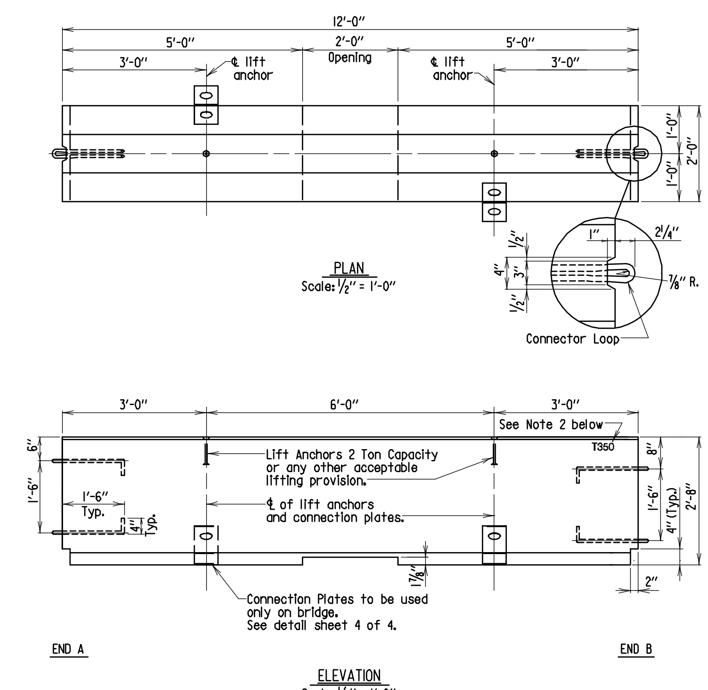

Notes:
1. One connector pin shall be furnished with each barrier. The cost of the connector pin shall be incidental to the item precast temporary concrete barrier.
2. All barriers shall have "T350" imprinted on top end of barrier. Imprint shall have a minimum depth of 1/4" and a minimum height of 2".

APPROVAL: DIRECTOR, OFFICE OF STRUCTURES. DATE: 6/15/84. REVISIONS: SHA 4-4-02, 5-21-04, 6-28-04, 8-5-04. FHWA APPROVAL DATE: 1-23-85

STATE OF MARYLAND
DEPARTMENT OF TRANSPORTATION
STATE HIGHWAY ADMINISTRATION
OFFICE OF STRUCTURES

TEMPORARY PRECAST DOUBLE FACE F-TYPE CONCRETE BARRIER

STANDARD NO. M(5.10)-84-158 — SHEET 2 OF 4

MISCELLANEOUS

MARYLAND TRANSPORTATION AUTHORITY

Engineering Division

I-95 FROM MORAVIA ROAD TO THE FORT McHENRY TUNNEL - PHASE 1 - SOUTHBOUND

I-95 (BALTIMORE CITY)

MD SHA STANDARDS DETAILS FOR STRUCTURES

DESIGNED BY K.A.	DRAWN BY J.E.	CHECKED BY D.W.
CONST. REVIEW BY	DATE DECEMBER 2009	SCALE AS SHOWN

ADDENDUMS & REVISIONS

NO.	DESCRIPTION	BY	DATE

CONTRACT NO. FT 928-000-006

DRAWING NO. **STD-8**

SHEET NO. 155 OF 188

r:\49562\dgn\Stds\stds.dgn Friday, December 04, 2009 AT 02:59 PM

FILE: r:\49562\dgn\Stds\stds.dgn
DATE: Friday, December 04, 2009 AT 02:59 PM

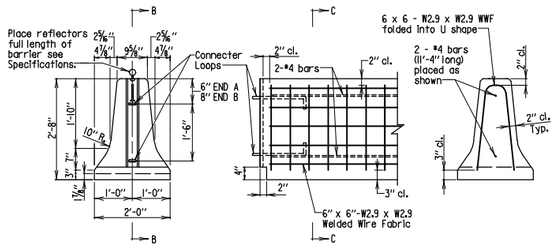

END VIEW
Scale: 1/2" = 1'-0"

REINFORCING STEEL DETAILS
Scale: 1/2" = 1'-0"

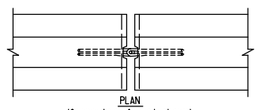

PLAN
(Connector pin not shown)

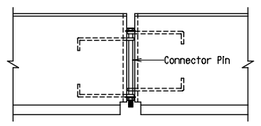

ELEVATION

JOINT DETAILS
Scale: 1/2" = 1'-0"

APPROVAL	STATE OF MARYLAND DEPARTMENT OF TRANSPORTATION STATE HIGHWAY ADMINISTRATION OFFICE OF STRUCTURES
DIRECTOR OFFICE OF STRUCTURES DATE: 6/15/84	TEMPORARY PRECAST DOUBLE FACE F-TYPE CONCRETE BARRIER
REVISIONS: SHA / FHWA: 4-4-02; 5-21-04; 6-28-04; 8-5-04	STANDARD NO. M(5.10)-84-158 — SHEET 3 OF 4
FHWA APPROVAL DATE: 1-23-85	

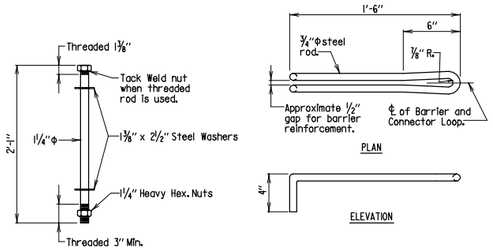

CONNECTOR PIN
Scale: None

CONNECTOR LOOP
Scale: None

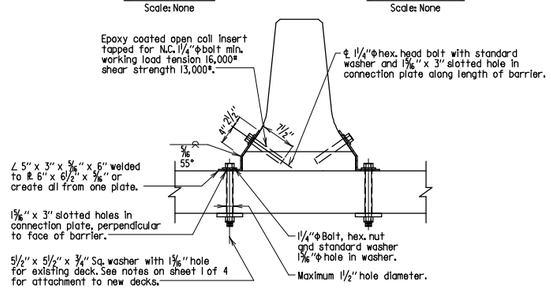

CONNECTION DETAIL
Scale: 3/4" = 1'-0"

APPROVAL	STATE OF MARYLAND DEPARTMENT OF TRANSPORTATION STATE HIGHWAY ADMINISTRATION OFFICE OF STRUCTURES
DIRECTOR OFFICE OF STRUCTURES DATE: 6/15/84	TEMPORARY PRECAST DOUBLE FACE F-TYPE CONCRETE BARRIER
REVISIONS: SHA / FHWA: 12-6-84 / 1-23-85; 5-17-91; 4-27-92; 4-4-02	STANDARD NO. M(5.10)-84-158 — SHEET 4 OF 4
FHWA APPROVAL DATE: 1-23-85	

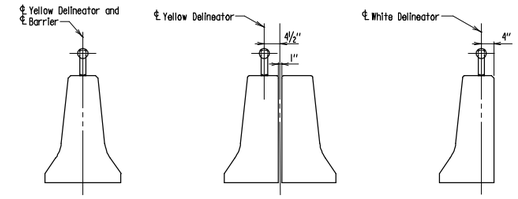

TRANSVERSE LOCATION OF DELINEATORS
Scale: 1/2" = 1'-0"

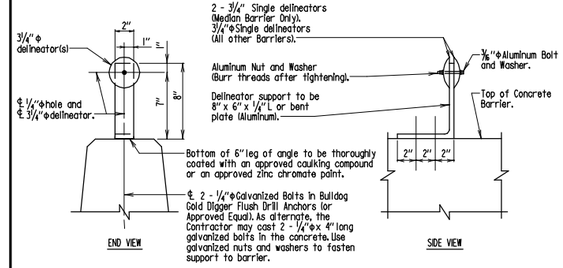

CONCRETE BARRIER DELINEATOR
Scale: 1 1/2" = 1'-0"

* SPACING OF DELINEATORS	
Radius of Horizontal Curve	C/C Distance Between Delineators
Less than 2000'	115'
2000' to 3000'	130'
3000' to 5000'	160'
Over 5000'	200'
Tangent Area	200'

* Place one delineator at each end of each wall, even if wall is shorter than lengths indicated below.

APPROVAL	STATE OF MARYLAND DEPARTMENT OF TRANSPORTATION STATE HIGHWAY ADMINISTRATION OFFICE OF STRUCTURES
DIRECTOR OFFICE OF STRUCTURES DATE: 6/20/75	CONCRETE BARRIER DELINEATOR
REVISIONS: SHA / FHWA: 10-19-77 / 10-19-77; 6-10-80 / 7-29-80; 10-22-03	STANDARD NO. M(5.11)-75-14 — SHEET 1 OF 1
FHWA APPROVAL DATE: 8-24-76	

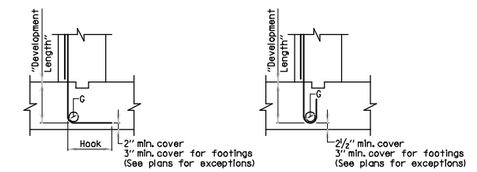

STANDARD 90° HOOK

STANDARD 180° HOOK

BAR SIZE	* LOCATION CATEGORY		
	D	E	F
#4	7"	9"	8"
#5	8"	1'-0"	9"
#6	10"	1'-2"	11"
#7	11"	1'-4"	1'-1"
#8	1'-1"	1'-6"	1'-3"
#9	1'-3"	1'-9"	1'-5"
#10	1'-4"	1'-11"	1'-7"
#11	1'-6"	2'-2"	1'-9"

RECOMMENDED END HOOKS ALL GRADES			
BAR SIZE	Finished bend diameter G in.	180 Degree hooks	90 Degree hooks
#4	3"	6"	8"
#5	3 3/4"	7"	10"
#6	4 1/2"	8"	1'-0"
#7	5 1/4"	10"	1'-2"
#8	6"	11"	1'-4"
#9	9 1/2"	1'-3"	1'-7"
#10	10 3/4"	1'-5"	1'-10"
#11	1'-0"	1'-7"	2'-0"

* LOCATION CATEGORY:

D- All bars terminating with a standard 180° hook with side cover (normal to plane of hook) not less than 2 1/2", and for 90° deg. hook, cover on bar extension beyond hook not less than 2".
E- All bars not in Category D.
F- All bars with hook enclosed vertically or horizontally within ties or stirrup-ties spaced along the full development length not greater than 3d where d is the diameter of the hooked bar.

Note:
1. When development length is not specified on the Plans, the above dimensions shall be used.
2. These development lengths do not apply when bar is in lightweight concrete or any other strength of concrete.
3. These development lengths only apply where the General Notes indicate "Reinforcing Steel Design, fs= 24,000 p.s.i."
4. If depth of member does not allow bar development length indicated in Categories A, B, and C: Std. No. M(6.16)-90-216; then hook shall be added to all bars not conforming, as per D, E & F.

APPROVAL	STATE OF MARYLAND DEPARTMENT OF TRANSPORTATION STATE HIGHWAY ADMINISTRATION OFFICE OF STRUCTURES
DIRECTOR OFFICE OF STRUCTURES DATE: 4/4/86	DEVELOPMENT LENGTH DIMENSIONS OF HOOKED BARS FOR GRADE 60 REINFORCING STEEL IN MIX NO. 6 (4500 P.S.I.) CONCRETE NON-EPOXY COATED REINFORCING
REVISIONS: SHA / FHWA: 11-23-93; 1-22-01; 9-20-05; 12-4-07	STANDARD NO. M(6.10)-86-180 — SHEET 1 OF 1
FHWA APPROVAL DATE: 6-8-90	

BAR SIZE	* LOCATION CATEGORY		
	A	B	C
#4	2'-5"	1'-9"	1'-5"
#5	3'-0"	2'-2"	1'-9"
#6	3'-7"	2'-7"	2'-1"
#7	4'-4"	3'-1"	2'-6"
#8	5'-8"	4'-1"	3'-3"
#9	7'-2"	5'-1"	4'-1"
#10	9'-1"	6'-6"	5'-2"
#11	11'-1"	7'-11"	6'-4"

* LOCATION CATEGORY

A - Bars in horizontal layers in top of pour with 12" or more of concrete below them such as in: footings, pier caps, etc.
B - All bars not in Category A spaced less than 6" apart.
C - All bars not in Category A spaced 6" or more apart.

Note:
1. When bar lap is not specified on the Plans, the above dimensions shall be used.
2. These bar laps do not apply when bar is in lightweight concrete. Greater lengths are required for this material.
3. These bar laps only apply where the General Notes indicate "Reinforcing Steel Design, fs= 24,000 p.s.i."

APPROVAL	STATE OF MARYLAND DEPARTMENT OF TRANSPORTATION STATE HIGHWAY ADMINISTRATION OFFICE OF STRUCTURES
DIRECTOR OFFICE OF STRUCTURES DATE: 4/30/81	BAR LAP DIMENSIONS FOR GRADE 60 REINFORCING STEEL IN MIX NO. 6 (4500 P.S.I.) CONCRETE NON-EPOXY COATED REINFORCING
REVISIONS: SHA / FHWA: 11-23-93; 1-22-01; 9-20-05; 12-4-07	STANDARD NO. M(6.05)-80-122 — SHEET 1 OF 3
FHWA APPROVAL DATE: 6-8-90	

BAR SIZE	* LOCATION CATEGORY			3 Times Bar Diameter	6 Times Bar Diameter	= c/c Spacing
	A	B	C			
#4	2'-11"	2'-7"	2'-1"	1 1/2"	3"	3 1/2"
#5	3'-8"	3'-3"	2'-7"	1 7/8"	3 3/4"	4 3/8"
#6	4'-5"	3'-10"	3'-1"	2 1/4"	4 1/2"	5 1/4"
#7	5'-3"	4'-7"	3'-8"	2 5/8"	5 1/4"	6 1/8"
#8	6'-10"	6'-1"	4'-10"	3"	6"	7"
#9	8'-8"	7'-8"	6'-1"	3 3/8"	6 3/4"	7 7/8"
#10	11'-0"	9'-8"	7'-9"	3 3/4"	7 5/8"	8 7/8"
#11	13'-6"	11'-11"	9'-6"	4 1/4"	8 1/2"	9 7/8"

* LOCATION CATEGORY

A - Bars in horizontal layers in top of pour with 12" or more of concrete below them such as in: footings, pier caps, etc.
B - All bars not in Category A spaced less than 6" apart.
C - All bars not in Category A spaced 6" or more apart.

Note:
1. When bar lap is not specified on the Plans, the above dimensions shall be used.
2. These bar laps do not apply when bar is in lightweight concrete. Greater lengths are required for this material.
3. These bar laps only apply where the General Notes indicate "Reinforcing Steel Design, fs= 24,000 p.s.i."

CASE NO.1 - For bars coated with epoxy with cover less than 3 times the bar diameter or clear spacing between bars less than 6 times the bar diameter.

APPROVAL	STATE OF MARYLAND DEPARTMENT OF TRANSPORTATION STATE HIGHWAY ADMINISTRATION OFFICE OF STRUCTURES
DIRECTOR OFFICE OF STRUCTURES DATE: 2/2/90	BAR LAP DIMENSIONS FOR GRADE 60 REINFORCING STEEL IN MIX NO. 6 (4500 P.S.I.) CONCRETE EPOXY COATED REINFORCING CASE NO.1
REVISIONS: SHA / FHWA: 11-23-93; 1-22-01; 9-20-05; 12-4-07	STANDARD NO. M(6.05)-80-122 — SHEET 2 OF 3
FHWA APPROVAL DATE:	

BAR SIZE	* LOCATION CATEGORY		
	A	B	C
#4	2'-11"	2'-1"	1'-8"
#5	3'-7"	2'-7"	2'-1"
#6	4'-4"	3'-1"	2'-6"
#7	5'-1"	Does Not Exist	2'-11"
#8	6'-8"		3'-10"
#9	8'-5"		4'-10"
#10	10'-9"		6'-2"
#11	13'-2"		7'-7"

* LOCATION CATEGORY

A - Bars in horizontal layers in top of pour with 12" or more of concrete below them such as in: footings, pier caps, etc.
B - All bars not in Category A spaced less than 6" apart.
C - All bars not in Category A spaced 6" or more apart.

Note:
1. When bar lap is not specified on the Plans, the above dimensions shall be used.
2. These bar laps do not apply when bar is in lightweight concrete. Greater lengths are required for this material.
3. These bar laps only apply where the General Notes indicate "Reinforcing Steel Design, fs= 24,000 p.s.i."

CASE NO.2 - For bars coated with epoxy not in Case No. 1.

APPROVAL	STATE OF MARYLAND DEPARTMENT OF TRANSPORTATION STATE HIGHWAY ADMINISTRATION OFFICE OF STRUCTURES
DIRECTOR OFFICE OF STRUCTURES DATE: 2/2/90	BAR LAP DIMENSIONS FOR GRADE 60 REINFORCING STEEL IN MIX NO. 6 (4500 P.S.I.) CONCRETE EPOXY COATED REINFORCING CASE NO.2
REVISIONS: SHA / FHWA: 11-23-93; 1-22-01; 9-20-05; 12-4-07	STANDARD NO. M(6.05)-80-122 — SHEET 3 OF 3
FHWA APPROVAL DATE:	

MARYLAND TRANSPORTATION AUTHORITY
Engineering Division

I-95 FROM MORAVIA ROAD TO THE FORT McHENRY TUNNEL - PHASE 1 - SOUTHBOUND
I-95 (BALTIMORE CITY)

MD SHA STANDARDS DETAILS FOR STRUCTURES

DESIGNED BY K.A.	DRAWN BY J.E.	CHECKED BY D.W.
CONST. REVIEW BY	DATE DECEMBER 2009	SCALE AS SHOWN

ADDENDUMS & REVISIONS

NO.	DESCRIPTION	BY	DATE

CONTRACT NO. FT 928-000-006
DRAWING NO. STD-9
SHEET NO. 156 OF 188

r:\49562\dgn\Stds\stds.dgn Friday, December 04, 2009 AT 02:59 PM

FILE: r:\49562\dgn\Stds\stds.dgn
DATE: Friday, December 04, 2009 AT 02:59 PM

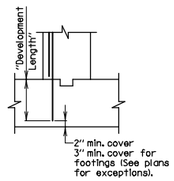

STANDARD STRAIGHT BAR

BAR SIZE	* LOCATION CATEGORY		
	A	B	C
#4	1'-5"	1'-0"	1'-0"
#5	1'-9"	1'-3"	1'-0"
#6	2'-2"	1'-6"	1'-3"
#7	2'-7"	1'-10"	1'-6"
#8	3'-4"	2'-5"	1'-11"
#9	4'-3"	3'-0"	2'-5"
#10	5'-4"	3'-10"	3'-1"
#11	6'-7"	4'-8"	3'-9"

* LOCATION CATEGORY:

A- Bars in horizontal layers in top of pour with 12" or more of concrete below them such as in: footings,pier caps,etc.
B- All bars not in Category A spaced less than 6" apart.
C- All bars not in Category A spaced 6" or more apart.

Note:
1. When development length is not specified on the Plans, the above dimensions shall be used.
2. These development lengths do not apply when bar is in lightweight concrete or any other strength of concrete.
3. These development lengths only apply where the General Notes indicate "Reinforcing Steel Design, fs= 24,000 p.s.i."
4. If depth of member does not allow bar development length indicated in Categories A, B, and C; then hook shall be added to all bars not conforming, as per D, E, and F per Std. No. M(6.10)-86-180.

APPROVAL	STATE OF MARYLAND DEPARTMENT OF TRANSPORTATION STATE HIGHWAY ADMINISTRATION OFFICE OF STRUCTURES
DIRECTOR OFFICE OF STRUCTURES DATE: 2/2/90	DEVELOPMENT LENGTH DIMENSIONS FOR GRADE 60 REINFORCING STEEL IN MIX NO.6 (4500 P.S.I.) CONCRETE NON-EPOXY COATED REINFORCING
REVISIONS: SHA / FHWA; 11-23-93; 1-22-01; 9-20-05; 12-4-07	
FHWA APPROVAL DATE:	STANDARD NO. M(6.16)-90-216 SHEET 1 OF 3

MISCELLANEOUS

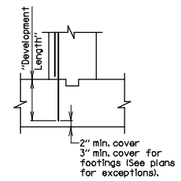

STANDARD STRAIGHT BAR

BAR SIZE	* LOCATION CATEGORY			3 Times Bar Diameter	6 Times Bar Diameter	= c/c Spacing
	A	B	C			
#4	1'-9"	1'-6"	1'-3"	1 1/2"	3"	3 1/2"
#5	2'-2"	1'-11"	1'-6"	1 7/8"	3 3/4"	4 3/8"
#6	2'-7"	2'-3"	1'-10"	2 1/4"	4 1/2"	5 1/4"
#7	3'-1"	2'-9"	2'-2"	2 5/8"	5 1/4"	6 1/8"
#8	4'-1"	3'-7"	2'-10"	3"	6"	7"
#9	5'-1"	4'-6"	3'-7"	3 3/8"	6 3/4"	7 7/8"
#10	6'-6"	5'-9"	4'-7"	3 3/4"	7 5/8"	8 7/8"
#11	7'-11"	7'-0"	5'-7"	4 1/4"	8 1/2"	9 7/8"

* LOCATION CATEGORY:

A- Bars in horizontal layers in top of pour with 12" or more of concrete below them such as in: footings,pier caps,etc.
B- All bars not in Category A spaced less than 6" apart.
C- All bars not in Category A spaced 6" or more apart.

Note:
1. When development length is not specified on the Plans, the above dimensions shall be used.
2. These development lengths do not apply when bar is in lightweight concrete or any other strength of concrete.
3. These development lengths only apply where the General Notes indicate "Reinforcing Steel Design, fs= 24,000 p.s.i."

CASE NO.1 - For bars coated with epoxy with cover less than 3 times the bar diameter or clear spacing between bars less than 6 times the bar diameter.

APPROVAL	STATE OF MARYLAND DEPARTMENT OF TRANSPORTATION STATE HIGHWAY ADMINISTRATION OFFICE OF STRUCTURES
DIRECTOR OFFICE OF STRUCTURES DATE: 2/2/90	DEVELOPMENT LENGTH DIMENSIONS FOR GRADE 60 REINFORCING STEEL IN MIX NO.6 (4500 P.S.I.) CONCRETE EPOXY COATED REINFORCING CASE NO.1
REVISIONS: SHA / FHWA; 11-23-93; 1-22-01; 9-20-05; 12-4-07	
FHWA APPROVAL DATE:	STANDARD NO. M(6.16)-90-216 SHEET 2 OF 3

MISCELLANEOUS

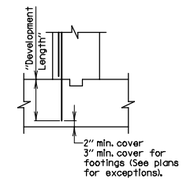

STANDARD STRAIGHT BAR

BAR SIZE	* LOCATION CATEGORY		
	A	B	C
#4	1'-9"	1'-3"	1'-0"
#5	2'-2"	1'-6"	1'-3"
#6	2'-7"	1'-10"	1'-6"
#7	3'-0"	Does Not Exist	1'-9"
#8	3'-11"		2'-3"
#9	5'-0"		2'-10"
#10	6'-4"		3'-8"
#11	7'-9"		4'-5"

* LOCATION CATEGORY:

A- Bars in horizontal layers in top of pour with 12" or more of concrete below them such as in: footings,pier caps,etc.
B- All bars not in Category A spaced less than 6" apart.
C- All bars not in Category A spaced 6" or more apart.

Note:
1. When development length is not specified on the Plans, the above dimensions shall be used.
2. These development lengths do not apply when bar is in lightweight concrete or any other strength of concrete.
3. These development lengths only apply where the General Notes indicate "Reinforcing Steel Design, fs= 24,000 p.s.i."

CASE NO.2 - For bars coated with epoxy not in Case No. 1.

APPROVAL	STATE OF MARYLAND DEPARTMENT OF TRANSPORTATION STATE HIGHWAY ADMINISTRATION OFFICE OF STRUCTURES
DIRECTOR OFFICE OF STRUCTURES DATE: 2/2/90	DEVELOPMENT LENGTH DIMENSIONS FOR GRADE 60 REINFORCING STEEL IN MIX NO.6 (4500 P.S.I.) CONCRETE EPOXY COATED REINFORCING CASE NO.2
REVISIONS: SHA / FHWA; 11-23-93; 1-22-01; 9-20-05; 12-4-07	
FHWA APPROVAL DATE:	STANDARD NO. M(6.16)-90-216 SHEET 3 OF 3

MISCELLANEOUS

TYPICAL BAR BENDS

DETAILS AND NOTES

SPIRAL

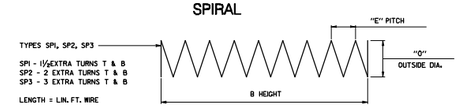

Unless otherwise noted diameter D is the same for all bends and hooks on a bar

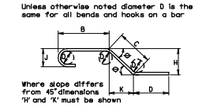

ENLARGED VIEW SHOWING BAR BENDING DETAILS

Notes:
1. All dimensions are out-to-out of bar or to tangent points for 135° and 180° hooks.
2. "J" dimensions on 180° hooks to be shown only where necessary to restrict hook size. Otherwise standard hooks are to be used.
3. Where "J" is not shown, "J" will be kept equal to or less than "H" on truss bars. Where "J" can exceed "H" it should be shown.
4. "H" dimension on stirrups to be shown where necessary to fit within concrete.
5. Where bars are to be bent more accurately than standard bending tolerances, bending dimensions which require closer fabrication should have limits indicated.

NOTE TO FABRICATOR

BENDING TOLERANCE NOTE
TIES AND STIRRUPS SHALL BE BENT WITH A PLUS ZERO INCH (+0") MINUS (-) NORMAL ACI BENDING TOLERANCES

APPROVAL	STATE OF MARYLAND DEPARTMENT OF TRANSPORTATION STATE HIGHWAY ADMINISTRATION OFFICE OF STRUCTURES
DIRECTOR OFFICE OF STRUCTURES DATE: 2/10/94	BAR BEND TYPES GENERAL NOTES
REVISIONS: SHA / FHWA	
FHWA APPROVAL DATE:	STANDARD NO. REBAR-BD(00.J)-94-296 SHEET 1 OF 8

REBAR BAR BENDS

ACI TYPICAL BAR BENDS

STANDARD PIN BENDING

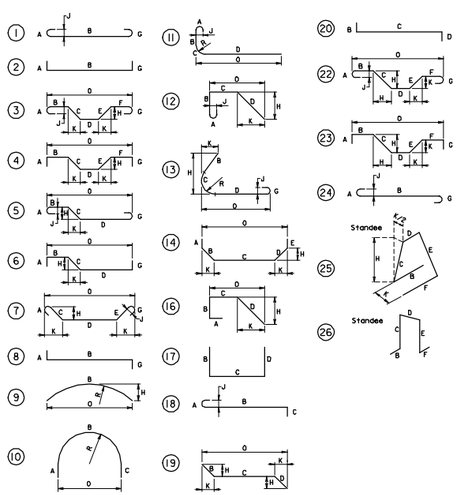

NOTE TO FABRICATOR

BENDING TOLERANCE NOTE
TIES AND STIRRUPS SHALL BE BENT WITH A PLUS ZERO INCH (+0") MINUS (-) NORMAL ACI BENDING TOLERANCES

APPROVAL	STATE OF MARYLAND DEPARTMENT OF TRANSPORTATION STATE HIGHWAY ADMINISTRATION OFFICE OF STRUCTURES
DIRECTOR OFFICE OF STRUCTURES DATE: 2/10/94	BAR BEND TYPES ACI - STANDARD PIN BENDING
REVISIONS: SHA / FHWA	
FHWA APPROVAL DATE:	STANDARD NO. REBAR-BD(00.J)-94-296 SHEET 2 OF 8

REBAR BAR BENDS

ACI TYPICAL BAR BENDS

TIES AND STIRRUPS

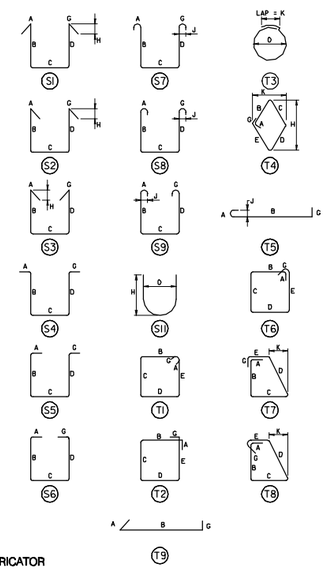

NOTE TO FABRICATOR

BENDING TOLERANCE NOTE
TIES AND STIRRUPS SHALL BE BENT WITH A PLUS ZERO INCH (+0") MINUS (-) NORMAL ACI BENDING TOLERANCES

APPROVAL	STATE OF MARYLAND DEPARTMENT OF TRANSPORTATION STATE HIGHWAY ADMINISTRATION OFFICE OF STRUCTURES
DIRECTOR OFFICE OF STRUCTURES DATE: 2/10/94	BAR BEND TYPES ACI - TIES A
REVISIONS: SHA / FHWA	
FHWA APPROVAL DATE:	STANDARD NO. REBAR-BD(00.J)-94-296 SHEET 3 OF 8

REBAR BAR BENDS

SHA TYPICAL BAR BENDS

TIES AND STIRRUPS

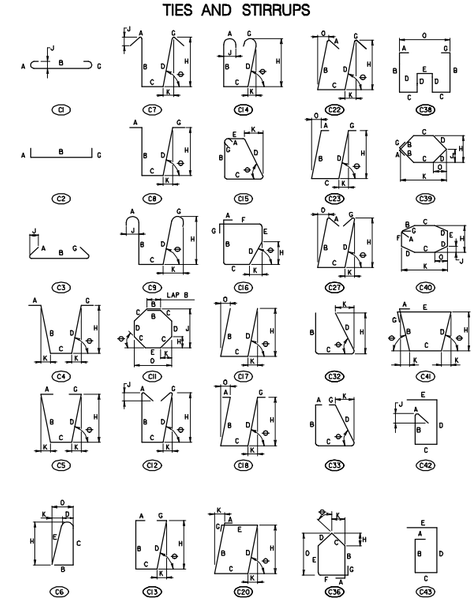

NOTE TO FABRICATOR

BENDING TOLERANCE NOTE
TIES AND STIRRUPS SHALL BE BENT WITH A PLUS ZERO INCH (+0") MINUS (-) NORMAL ACI BENDING TOLERANCES

APPROVAL	STATE OF MARYLAND DEPARTMENT OF TRANSPORTATION STATE HIGHWAY ADMINISTRATION OFFICE OF STRUCTURES
DIRECTOR OFFICE OF STRUCTURES DATE: 2/10/94	BAR BEND TYPES SHA - TIES AND STIRRUPS
REVISIONS: SHA / FHWA	
FHWA APPROVAL DATE:	STANDARD NO. REBAR-BD(00.J)-94-296 SHEET 4 OF 8

REBAR BAR BENDS

MARYLAND TRANSPORTATION AUTHORITY

Engineering Division

I-95 FROM MORAVIA ROAD TO THE FORT McHENRY TUNNEL - PHASE 1 - SOUTHBOUND

I-95 (BALTIMORE CITY)

MD SHA STANDARDS DETAILS FOR STRUCTURES

DESIGNED BY K.A.	DRAWN BY J.E.	CHECKED BY D.W.
CONST. REVIEW BY	DATE DECEMBER 2009	SCALE AS SHOWN

ADDENDUMS & REVISIONS

NO.	DESCRIPTION	BY	DATE

CONTRACT NO. FT 928-000-006

DRAWING NO. **STD-10**

SHEET NO. 157 OF 188

r:\49562\dgn\Stds\stds.dgn Friday, December 04, 2009 AT 02:59 PM

FILE: r:\49562\dgn\Stds\stds.dgn
DATE: Friday, December 04, 2009 AT 02:59 PM

SHA TYPICAL BAR BENDS

TIES AND STIRRUPS

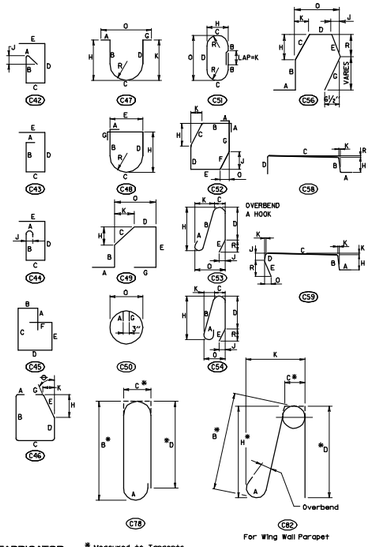

* Measured to Tangents of Curves.

NOTE TO FABRICATOR

BENDING TOLERANCE NOTE

TIES AND STIRRUPS SHALL BE BENT WITH A PLUS ZERO INCH (+0") MINUS (-) NORMAL ACI BENDING TOLERANCES

APPROVAL: DIRECTOR OFFICE OF STRUCTURES — DATE: 2/10/94

REVISIONS: SHA | FHWA

STATE OF MARYLAND
DEPARTMENT OF TRANSPORTATION
STATE HIGHWAY ADMINISTRATION
OFFICE OF STRUCTURES

BAR BEND TYPES
SHA - TIES AND STIRRUPS

FHWA APPROVAL DATE:

STANDARD NO. REBAR-BD(00.J)-94-296 SHEET 5 OF 8

REBAR BAR BENDS

SHA TYPICAL BAR BENDS

STANDARD PIN BENDING

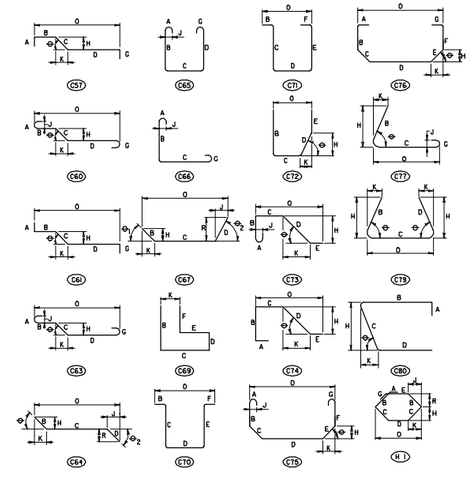

NOTE TO FABRICATOR

BENDING TOLERANCE NOTE

TIES AND STIRRUPS SHALL BE BENT WITH A PLUS ZERO INCH (+0") MINUS (-) NORMAL ACI BENDING TOLERANCES

APPROVAL: DIRECTOR OFFICE OF STRUCTURES — DATE: 2/10/94

REVISIONS: SHA | FHWA

STATE OF MARYLAND
DEPARTMENT OF TRANSPORTATION
STATE HIGHWAY ADMINISTRATION
OFFICE OF STRUCTURES

BAR BEND TYPES
SHA - STANDARD PIN BENDING

FHWA APPROVAL DATE:

STANDARD NO. REBAR-BD(00.J)-94-296 SHEET 6 OF 8

REBAR BAR BENDS

SHA TYPICAL BAR BENDS

RADIUS BENDING

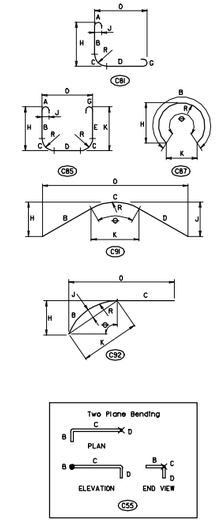

NOTE TO FABRICATOR

BENDING TOLERANCE NOTE

TIES AND STIRRUPS SHALL BE BENT WITH A PLUS ZERO INCH (+0") MINUS (-) NORMAL ACI BENDING TOLERANCES

APPROVAL: DIRECTOR OFFICE OF STRUCTURES — DATE: 2/10/94

REVISIONS: SHA | FHWA

STATE OF MARYLAND
DEPARTMENT OF TRANSPORTATION
STATE HIGHWAY ADMINISTRATION
OFFICE OF STRUCTURES

BAR BEND TYPES
SHA - RADIUS BENDING

FHWA APPROVAL DATE:

STANDARD NO. REBAR-BD(00.J)-94-296 SHEET 7 OF 8

REBAR BAR BENDS

SHA TYPICAL BAR BENDS

TRUSS BAR CONFIGURATIONS

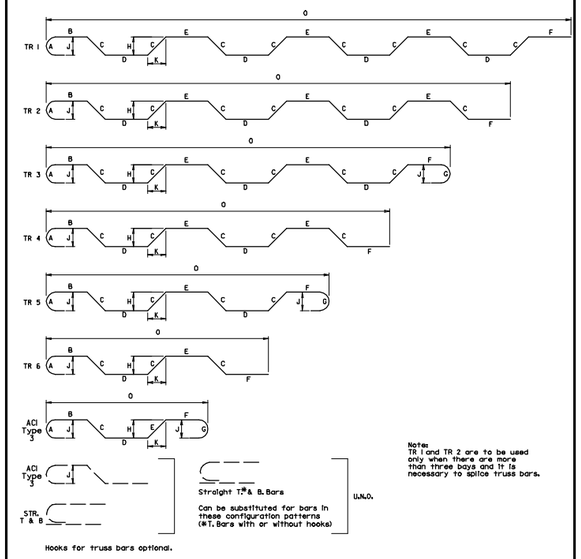

Notes:
TR 1 and TR 2 are to be used only when there are more than three bays and it is necessary to splice truss bars.

NOTE TO FABRICATOR

BENDING TOLERANCE NOTE

TIES AND STIRRUPS SHALL BE BENT WITH A PLUS ZERO INCH (+0") MINUS (-) NORMAL ACI BENDING TOLERANCES

APPROVAL: DIRECTOR OFFICE OF STRUCTURES — DATE: 2/10/94

REVISIONS: SHA | FHWA

STATE OF MARYLAND
DEPARTMENT OF TRANSPORTATION
STATE HIGHWAY ADMINISTRATION
OFFICE OF STRUCTURES

BAR BEND TYPES
TRUSS BAR CONFIGURATIONS

FHWA APPROVAL DATE:

STANDARD NO. REBAR-BD(00.J)-94-296 SHEET 8 OF 8

REBAR BAR BENDS

HOOKS TABLE I REFERENCES

1. ACI Types 1 thru 26
2. SHA Standard Pin Bending
3. SHA Radius Bending

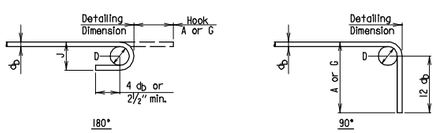

RECOMMENDED END HOOKS, ALL GRADES				
BAR SIZE	Finished bend diameter D, in.	180 - deg hook A or G in	180 - deg hook J, in.	90 - deg hook A or G in
#3	2¼	5	3	6
#4	3	6	4	8
#5	3¾	7	5	10
#6	4½	8	6	1-0
#7	5¼	10	7	1-2
#8	6	11	8	1-4
#9	9½	1-3	11¾	1-7
#10	10¾	1-5	1-1¼	1-10
#11	12	1-7	1-2¾	2-0
#14	18¼	2-3	1-9¾	2-7
#18	24	3-0	2-4½	3-5

APPROVAL: DIRECTOR OFFICE OF STRUCTURES — DATE: 11/17/97

REVISIONS: SHA | FHWA

STATE OF MARYLAND
DEPARTMENT OF TRANSPORTATION
STATE HIGHWAY ADMINISTRATION
OFFICE OF STRUCTURES

REINFORCING STEEL HOOK TABLES AND DIAGRAMS

FHWA APPROVAL DATE:

STANDARD NO. REBAR-BD(9.05)-97-320 SHEET 1 OF 2

REBAR BAR BENDS

HOOKS TABLE II REFERENCES

1. ACI Types S1 thru S11
2. ACI Types T1 thru T8
3. SHA Ties and Stirrups

(Note: Tie and stirrup types supplied in sizes #3-#8)

STIRRUP AND TIE HOOKS

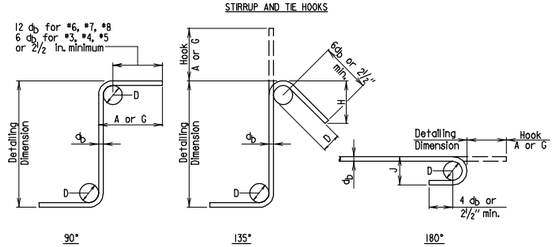

STIRRUP AND TIE HOOK DIMENSIONS, in.				
BAR SIZE	D, in.	90 - deg hook A or G	135 - deg hook A or G	135 - deg hook H, approx
#3	1½	4	4	2½
#4	2	4½	4½	3
#5	2½	6	5½	3¾
#6	4½	1-0	7¾	4½
#7	5¼	1-2	9	5¼
#8	6	1-4	10¼	6

RECOMMENDED END HOOKS, ALL GRADES			
BAR SIZE	Finished bend diameter D, in.	180 - deg hook A or G in	180 - deg hook J, in.
#3	2¼	5	3
#4	3	6	4
#5	3¾	7	5
#6	4½	8	6
#7	5¼	10	7
#8	6	11	8

APPROVAL: DIRECTOR OFFICE OF STRUCTURES — DATE: 11/17/97

REVISIONS: SHA | FHWA — 12-19-97

STATE OF MARYLAND
DEPARTMENT OF TRANSPORTATION
STATE HIGHWAY ADMINISTRATION
OFFICE OF STRUCTURES

REINFORCING STEEL HOOK TABLES AND DIAGRAMS

FHWA APPROVAL DATE:

STANDARD NO. REBAR-BD(9.05)-97-320 SHEET 2 OF 2

REBAR BAR BENDS

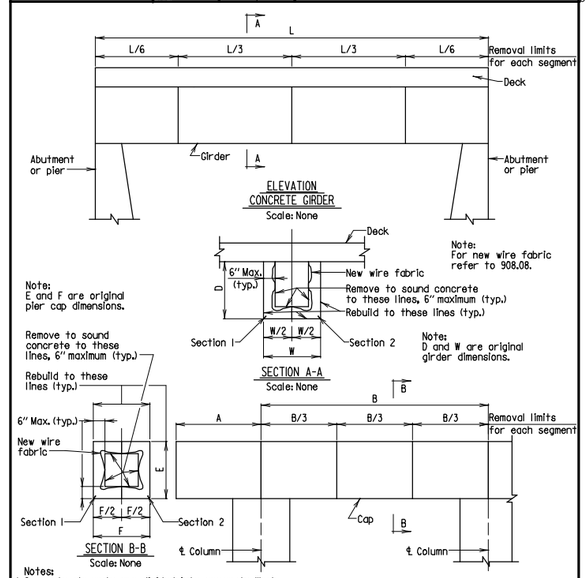

Note:
E and F are original pier cap dimensions.

Note:
For new wire fabric refer to 908.08.

Note:
D and W are original girder dimensions.

Notes:
1. Concrete elements are divided into segments. Work to be performed on sections as provided below.
2. Refer to Section 423.
3. Contractor shall stage the work so that the worse sections are repaired first.
4. Contractor shall not work on more than two nonadjacent sections on each pier cap, column, or girder at one time.
5. Contractor shall wait 72 hours after completing repairs to a section before chipping adjacent sections, however he may perform work on other bridge elements.
6. Contractor shall stop removing deteriorated concrete when a maximum depth of 6 in. is reached. The Engineer shall immediately notify the Office of Bridge Development If more removal seems necessary.
7. Existing reinforcing steel not shown.
8. For column repair details, see sheet 2 of 2.

APPROVAL: DIRECTOR OFFICE OF STRUCTURES — DATE: 11/14/95

REVISIONS: SHA | FHWA — 1-22-01

STATE OF MARYLAND
DEPARTMENT OF TRANSPORTATION
STATE HIGHWAY ADMINISTRATION
OFFICE OF STRUCTURES

PNEUMATICALLY APPLIED MORTAR SEQUENCE AND REPAIR DETAILS

FHWA APPROVAL DATE:

STANDARD NO. BR-SR(0.02)-95-305 SHEET 1 OF 2

REBAR BAR BENDS

MARYLAND TRANSPORTATION AUTHORITY

Engineering Division

I-95 FROM MORAVIA ROAD TO THE FORT McHENRY TUNNEL - PHASE 1 - SOUTHBOUND

I-95 (BALTIMORE CITY)

MD SHA STANDARDS DETAILS FOR STRUCTURES

DESIGNED BY K.A.	DRAWN BY J.E.	CHECKED BY D.W.
CONST. REVIEW BY	DATE DECEMBER 2009	SCALE AS SHOWN

ADDENDUMS & REVISIONS

NO.	DESCRIPTION	BY	DATE

CONTRACT NO. FT 928-000-006

DRAWING NO. **STD-11**

SHEET NO. 158 OF 188

r:\49562\dgn\Stds\stds.dgn Friday, December 04, 2009 AT 02:59 PM

FILE: r:\49562\dgn\Stds\stds.dgn
DATE: Friday, December 04, 2009 AT 02:59 PM

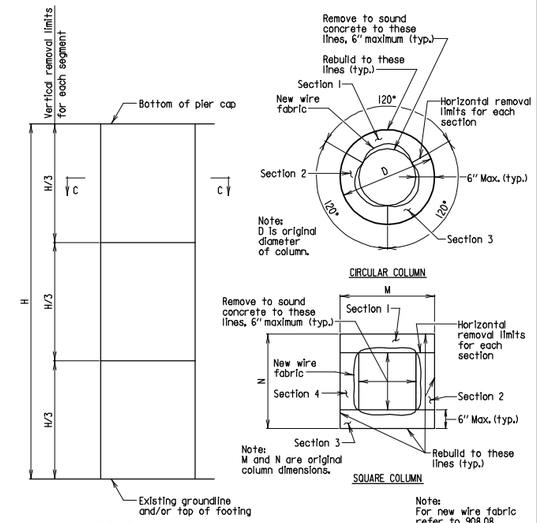

ELEVATION
PIER COLUMN
Scale: None

Note: For new wire fabric refer to 908.08.

SECTION C-C
Scale: None

Notes:
1. When height of columns is more than 18 ft., the Contractor will be restricted to 6 ft. segments.
2. Refer to Section 423.
3. For notes, see sheet 1 of 2.

APPROVAL	STATE OF MARYLAND DEPARTMENT OF TRANSPORTATION STATE HIGHWAY ADMINISTRATION OFFICE OF STRUCTURES
DIRECTOR OFFICE OF STRUCTURES DATE: 11/14/95	PNEUMATICALLY APPLIED MORTAR SEQUENCE AND REPAIR DETAILS
REVISIONS SHA FHWA 1-23-97 1-22-01 6-19-08	
FHWA APPROVAL DATE:	STANDARD NO. BR-SR(0.02)-95-305 SHEET 2 OF 2

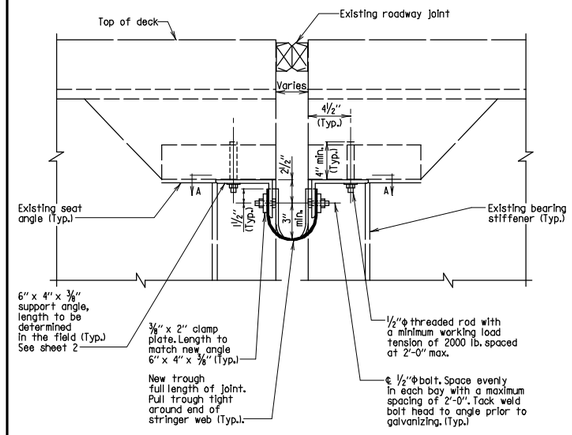

TROUGH DETAIL BETWEEN BEAMS AT PIER
Scale: 1½" = 1'-0"

Notes:
1. All steel shall be galvanized ASTM A 709 Grade 36.
2. Trough shall conform to 911.11.
3. Trough cross slope shall be a minimum of 1" per foot for finger joints. All other joints shall follow the grade of the end diaphragms or ¼" per foot slope whichever is greater.
4. All hardware shall be stainless steel Type 304.
5. Drilled holes for threaded rods shall be ½" larger.
6. Grout shall conform to 902.11 (c).
7. Fiberglass shall conform to 921.11.

APPROVAL	STATE OF MARYLAND DEPARTMENT OF TRANSPORTATION STATE HIGHWAY ADMINISTRATION OFFICE OF STRUCTURES
DIRECTOR OFFICE OF STRUCTURES DATE: 11/14/95	DRAINAGE TROUGH DETAIL AT PIER FOR EXISTING STRUCTURE
REVISIONS SHA FHWA 1-23-97 1-22-01 1-18-05 7-14-08	
FHWA APPROVAL DATE:	STANDARD NO. BR-SR(0.05)-95-308 SHEET 1 OF 8

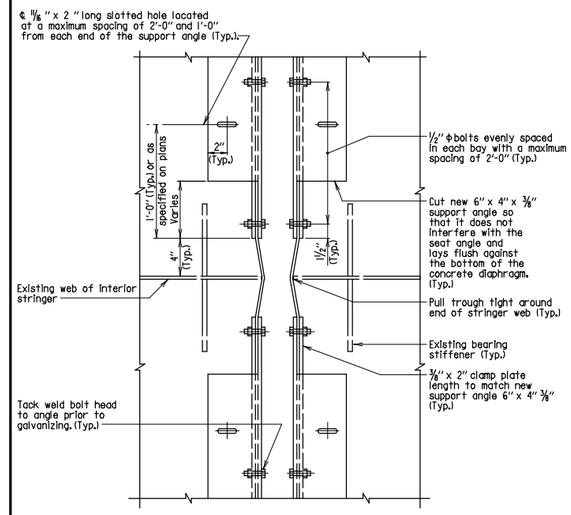

SECTION A-A
Scale: 1½" = 1'-0"

Note: Existing seat angle not shown for clarity.

APPROVAL	STATE OF MARYLAND DEPARTMENT OF TRANSPORTATION STATE HIGHWAY ADMINISTRATION OFFICE OF STRUCTURES
DIRECTOR OFFICE OF STRUCTURES DATE: 11/14/95	DRAINAGE TROUGH DETAIL AT PIER FOR EXISTING STRUCTURE
REVISIONS SHA FHWA 1-23-97 7-30-99	
FHWA APPROVAL DATE:	STANDARD NO. BR-SR(0.05)-95-308 SHEET 2 OF 8

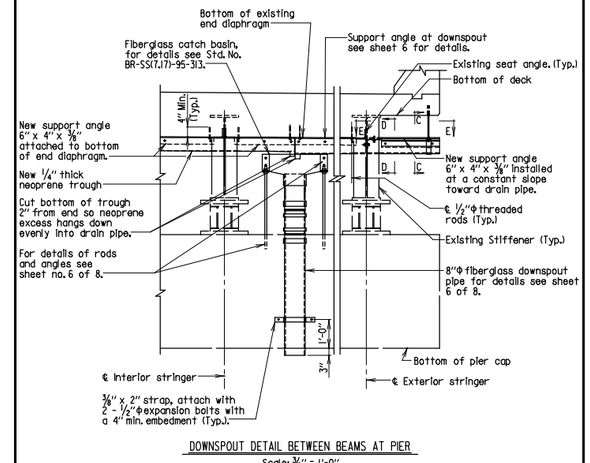

DOWNSPOUT DETAIL BETWEEN BEAMS AT PIER
Scale: ⅜" = 1'-0"

Note:
1. For location of downspout refer to the General Plan and Elevation.
2. Refer to MI6.04)-80-119 for splash block requirements.

APPROVAL	STATE OF MARYLAND DEPARTMENT OF TRANSPORTATION STATE HIGHWAY ADMINISTRATION OFFICE OF STRUCTURES
DIRECTOR OFFICE OF STRUCTURES DATE: 11/14/95	DRAINAGE TROUGH DETAIL AT PIER FOR EXISTING STRUCTURE
REVISIONS SHA FHWA 1-23-97 7-24-01 7-14-08	
FHWA APPROVAL DATE:	STANDARD NO. BR-SR(0.05)-95-308 SHEET 3 OF 8

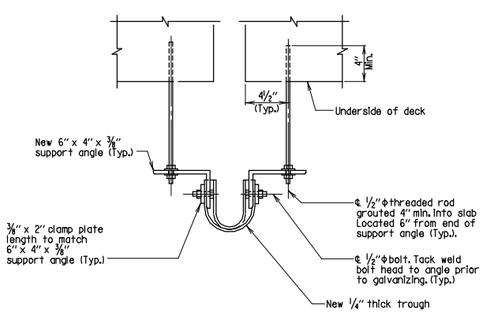

SECTION C-C
Scale: 1½" = 1'-0"

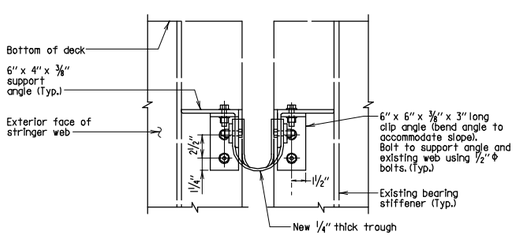

SECTION D-D
Scale: 1½" = 1'-0"

APPROVAL	STATE OF MARYLAND DEPARTMENT OF TRANSPORTATION STATE HIGHWAY ADMINISTRATION OFFICE OF STRUCTURES
DIRECTOR OFFICE OF STRUCTURES DATE: 11/14/95	DRAINAGE TROUGH DETAIL AT PIER FOR EXISTING STRUCTURE
REVISIONS SHA FHWA 1-23-97 1-22-01	
FHWA APPROVAL DATE:	STANDARD NO. BR-SR(0.05)-95-308 SHEET 4 OF 8

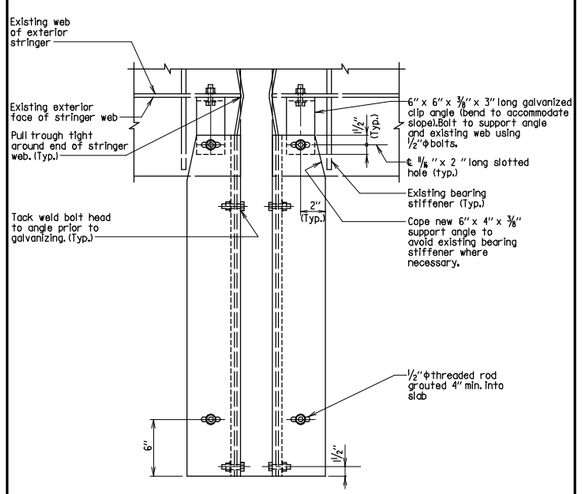

SECTION E-E
Scale: 1½" = 1'-0"

Note: Existing seat angle not shown for clarity.

APPROVAL	STATE OF MARYLAND DEPARTMENT OF TRANSPORTATION STATE HIGHWAY ADMINISTRATION OFFICE OF STRUCTURES
DIRECTOR OFFICE OF STRUCTURES DATE: 11/14/95	DRAINAGE TROUGH DETAIL AT PIER FOR EXISTING STRUCTURE
REVISIONS SHA FHWA 1-23-97 1-22-01	
FHWA APPROVAL DATE:	STANDARD NO. BR-SR(0.05)-95-308 SHEET 5 OF 8

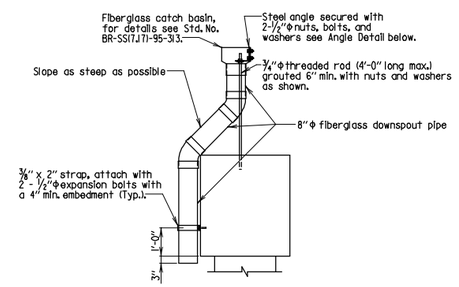

DOWNSPOUT DETAIL FOR PIER CAPS
Scale: ⅜" = 1'-0"

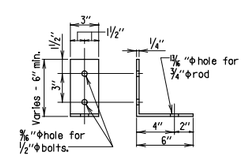

ANGLE DETAIL
Scale: 1½" = 1'-0"

APPROVAL	STATE OF MARYLAND DEPARTMENT OF TRANSPORTATION STATE HIGHWAY ADMINISTRATION OFFICE OF STRUCTURES
DIRECTOR OFFICE OF STRUCTURES DATE: 11/14/95	DRAINAGE TROUGH DETAIL AT PIER FOR EXISTING STRUCTURE
REVISIONS SHA FHWA 1-23-97 11-17-97 7-14-08	
FHWA APPROVAL DATE:	STANDARD NO. BR-SR(0.05)-95-308 SHEET 6 OF 8

MARYLAND TRANSPORTATION AUTHORITY

Engineering Division

I-95 FROM MORAVIA ROAD TO THE FORT McHENRY TUNNEL - PHASE 1 - SOUTHBOUND

I-95 (BALTIMORE CITY)

MD SHA STANDARDS DETAILS FOR STRUCTURES

DESIGNED BY K.A.	DRAWN BY J.E.	CHECKED BY D.W.
CONST. REVIEW BY	DATE DECEMBER 2009	SCALE AS SHOWN

ADDENDUMS & REVISIONS

NO.	DESCRIPTION	BY	DATE

CONTRACT NO. FT 928-000-006

DRAWING NO. **STD-12**

SHEET NO. 159 OF 188

r:\49562\dgn\Stds\stds.dgn Friday, December 04, 2009 AT 03:00 PM

FILE: r:\49562\dgn\Stds\stds.dgn
DATE: Friday, December 04, 2009 AT 03:00 PM

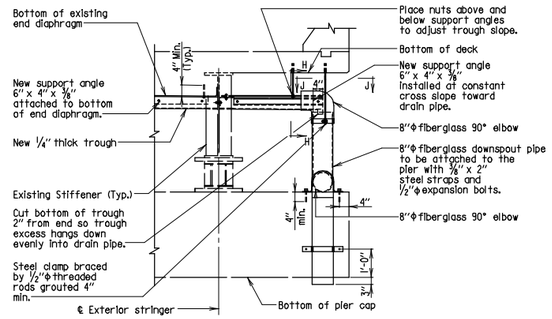

ALTERNATE DOWNSPOUT DETAIL AT PIER

Scale: 3/8" = 1'-0"

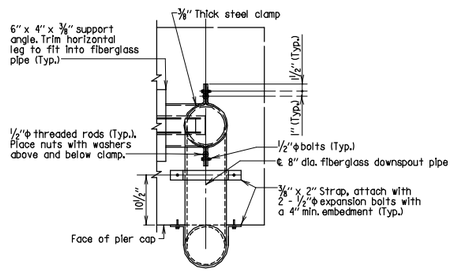

SECTION J-J

Scale: 3/4" = 1'-0"

APPROVAL	STATE OF MARYLAND DEPARTMENT OF TRANSPORTATION STATE HIGHWAY ADMINISTRATION OFFICE OF STRUCTURES
DIRECTOR OFFICE OF STRUCTURES DATE: 11/14/95	DRAINAGE TROUGH DETAIL AT PIER FOR EXISTING STRUCTURE
REVISIONS SHA FHWA: 1-23-97, 1-22-01, 7-14-08	STANDARD NO. BR-SR(0.05)-95-308 SHEET 7 OF 8
FHWA APPROVAL DATE:	

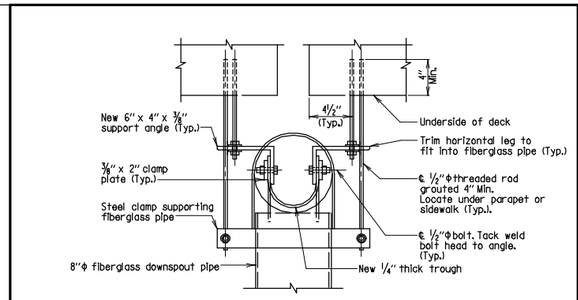

SECTION H-H

Scale: 1 1/2" = 1'-0"

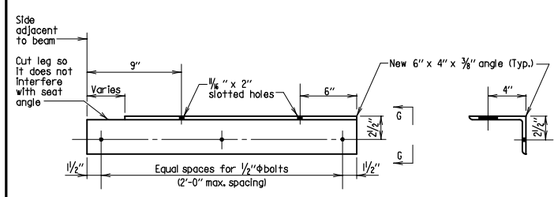

SUPPORT ANGLE AT DOWNSPOUT

Scale: 1 1/2" = 1'-0"

VIEW G-G

Scale: 1 1/2" = 1'-0"

Note:
Length of support angle to be determined in the field.

APPROVAL	STATE OF MARYLAND DEPARTMENT OF TRANSPORTATION STATE HIGHWAY ADMINISTRATION OFFICE OF STRUCTURES
DIRECTOR OFFICE OF STRUCTURES DATE: 11/14/95	DRAINAGE TROUGH DETAIL AT PIER FOR EXISTING STRUCTURE
REVISIONS SHA FHWA: 1-23-97, 1-22-01, 7-14-08	STANDARD NO. BR-SR(0.05)-95-308 SHEET 8 OF 8
FHWA APPROVAL DATE:	

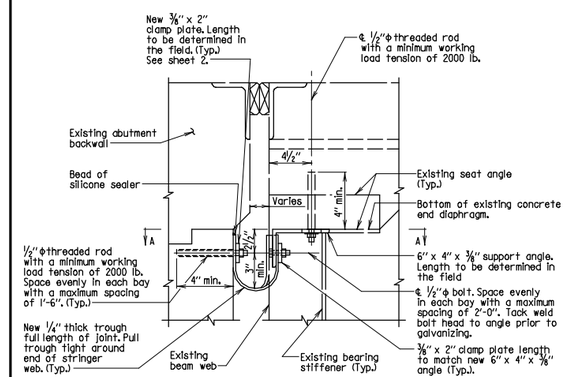

TROUGH DETAIL BETWEEN BEAMS AT ABUTMENT

Scale: 1 1/2" = 1'-0"

Notes:
1. All steel shall be galvanized ASTM A 709 Grade 36.
2. Trough shall conform to 911.11 or 911.12.
3. Trough cross slope shall be a minimum of 1" per foot for finger joints. All other joints shall follow the grade of the end diaphragms or 1/4" per foot slope whichever is greater.
4. All hardware shall be stainless steel Type 304.
5. Drilled holes for threaded rods shall be 1/2" larger.
6. Grout shall conform to 902.11 (c).
7. Fiberglass shall conform to 921.11.
8. Silicone sealer shall conform to 911.01.01.

APPROVAL	STATE OF MARYLAND DEPARTMENT OF TRANSPORTATION STATE HIGHWAY ADMINISTRATION OFFICE OF STRUCTURES
DIRECTOR OFFICE OF STRUCTURES DATE: 11/14/95	DRAINAGE TROUGH DETAIL AT ABUTMENT FOR EXISTING STRUCTURE
REVISIONS SHA FHWA: 1-23-97, 9-15-98, 1-22-01, 7-14-08	STANDARD NO. BR-SR(0.06)-95-309 SHEET 1 OF 7
FHWA APPROVAL DATE:	

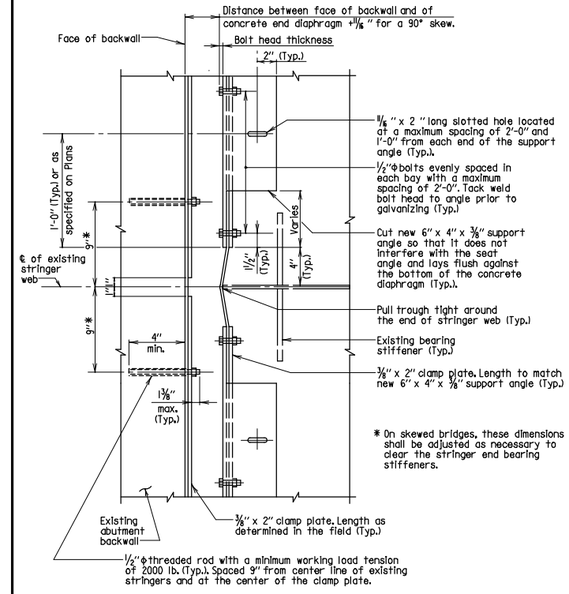

SECTION A-A

Scale: 1 1/2" = 1'-0"

Note:
Existing seat angle not shown for clarity.

APPROVAL	STATE OF MARYLAND DEPARTMENT OF TRANSPORTATION STATE HIGHWAY ADMINISTRATION OFFICE OF STRUCTURES
DIRECTOR OFFICE OF STRUCTURES DATE: 11/14/95	DRAINAGE TROUGH DETAIL AT ABUTMENT FOR EXISTING STRUCTURE
REVISIONS SHA FHWA: 1-23-97, 7-30-99, 1-22-01	STANDARD NO. BR-SR(0.06)-95-309 SHEET 2 OF 7
FHWA APPROVAL DATE:	

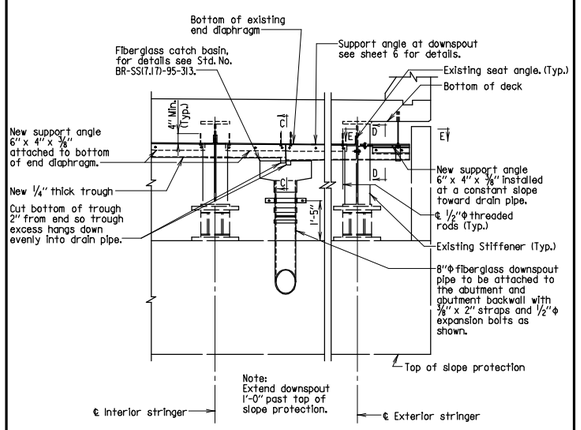

DOWNSPOUT DETAIL BETWEEN BEAMS AT ABUTMENT

Scale: 3/8" = 1'-0"

APPROVAL	STATE OF MARYLAND DEPARTMENT OF TRANSPORTATION STATE HIGHWAY ADMINISTRATION OFFICE OF STRUCTURES
DIRECTOR OFFICE OF STRUCTURES DATE: 11/14/95	DRAINAGE TROUGH DETAIL AT ABUTMENT FOR EXISTING STRUCTURE
REVISIONS SHA FHWA: 1-23-97, 1-22-01, 7-14-08	STANDARD NO. BR-SR(0.06)-95-309 SHEET 3 OF 7
FHWA APPROVAL DATE:	

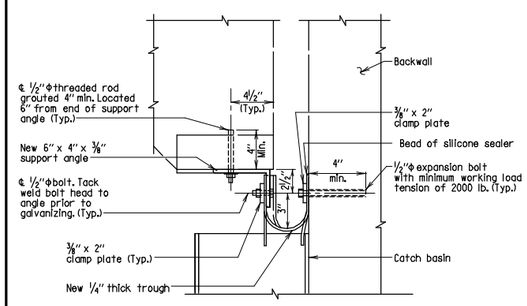

SECTION C-C

Scale: 1 1/2" = 1'-0"

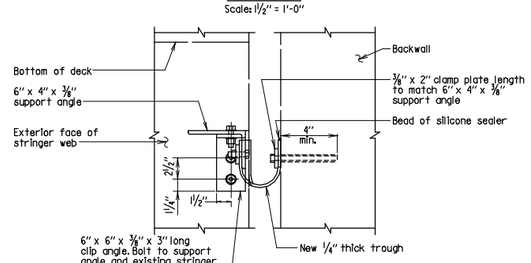

SECTION D-D

Scale: 1 1/2" = 1'-0"

APPROVAL	STATE OF MARYLAND DEPARTMENT OF TRANSPORTATION STATE HIGHWAY ADMINISTRATION OFFICE OF STRUCTURES
DIRECTOR OFFICE OF STRUCTURES DATE: 11/14/95	DRAINAGE TROUGH DETAIL AT ABUTMENT FOR EXISTING STRUCTURE
REVISIONS SHA FHWA: 1-23-97, 9-15-98, 1-22-01	STANDARD NO. BR-SR(0.06)-95-309 SHEET 4 OF 7
FHWA APPROVAL DATE:	

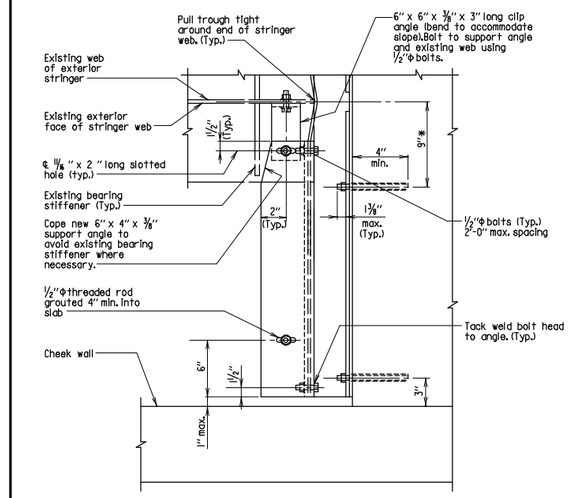

SECTION E-E

Scale: 1 1/2" = 1'-0"

* On skewed bridges, these dimensions shall be adjusted as necessary to clear the stringer end bearing stiffeners.

Note:
Existing interior seat angle not shown for clarity.

APPROVAL	STATE OF MARYLAND DEPARTMENT OF TRANSPORTATION STATE HIGHWAY ADMINISTRATION OFFICE OF STRUCTURES
DIRECTOR OFFICE OF STRUCTURES DATE: 11/14/95	DRAINAGE TROUGH DETAIL AT ABUTMENT FOR EXISTING STRUCTURE
REVISIONS SHA FHWA: 1-23-97, 1-22-01	STANDARD NO. BR-SR(0.06)-95-309 SHEET 5 OF 7
FHWA APPROVAL DATE:	

MARYLAND TRANSPORTATION AUTHORITY

Engineering Division

I-95 FROM MORAVIA ROAD TO THE FORT McHENRY TUNNEL - PHASE 1 - SOUTHBOUND

I-95 (BALTIMORE CITY)

MD SHA STANDARDS DETAILS FOR STRUCTURES

DESIGNED BY K.A.	DRAWN BY J.E.	CHECKED BY D.W.
CONST. REVIEW BY	DATE DECEMBER 2009	SCALE AS SHOWN

ADDENDUMS & REVISIONS

NO.	DESCRIPTION	BY	DATE

CONTRACT NO. FT 928-000-006

DRAWING NO. **STD-13**

SHEET NO. 160 OF 188

r:\49562\dgn\Stds\stds.dgn Friday, December 04, 2009 AT 03:00 PM

FILE: r:\49562\dgn\Stds\stds.dgn
DATE: Friday, December 04, 2009 AT 03:00 PM

STRUCTURAL REPORTS

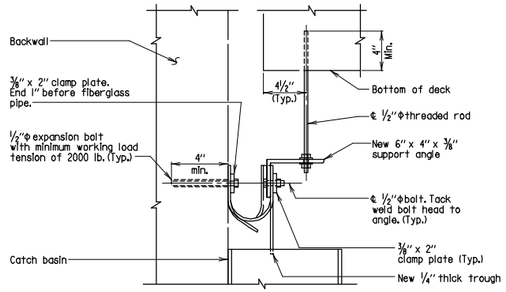

SECTION H-H
Scale: 1 1/2" = 1'-0"

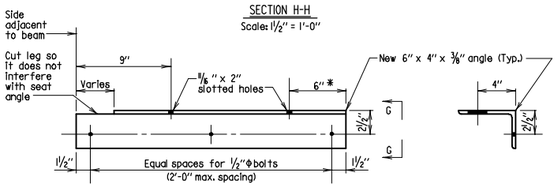

SUPPORT ANGLE AT DOWNSPOUT
Scale: 1 1/2" = 1'-0"

VIEW G-G
Scale: 1 1/2" = 1'-0"

*When installed on the exterior, adjust to miss the elbow by 1 1/2".

Note:
Length to be determined in the field.

APPROVAL		
DIRECTOR OFFICE OF STRUCTURES DATE: 11/14/95		
REVISIONS		
SHA	FHWA	
1-23-97		
1-22-01		
7-14-08		
FHWA APPROVAL DATE:		

STATE OF MARYLAND
DEPARTMENT OF TRANSPORTATION
STATE HIGHWAY ADMINISTRATION
OFFICE OF STRUCTURES

DRAINAGE TROUGH DETAIL AT ABUTMENT FOR EXISTING STRUCTURE

STANDARD NO. BR-SR(0.06)-95-309 SHEET 6 OF 7

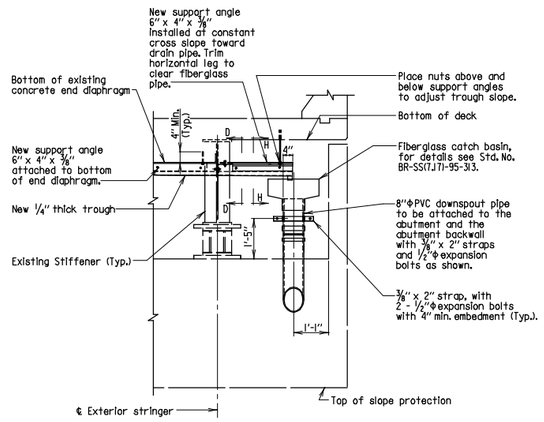

DOWNSPOUT DETAIL AT END OF ABUTMENT
Scale: 3/8" = 1'-0"

APPROVAL		
DIRECTOR OFFICE OF STRUCTURES DATE: 11/14/95		
REVISIONS		
SHA	FHWA	
1-23-97		
1-22-01		
7-14-08		
FHWA APPROVAL DATE:		

STATE OF MARYLAND
DEPARTMENT OF TRANSPORTATION
STATE HIGHWAY ADMINISTRATION
OFFICE OF STRUCTURES

DRAINAGE TROUGH DETAIL AT ABUTMENT FOR EXISTING STRUCTURE

STANDARD NO. BR-SR(0.06)-95-309 SHEET 7 OF 7

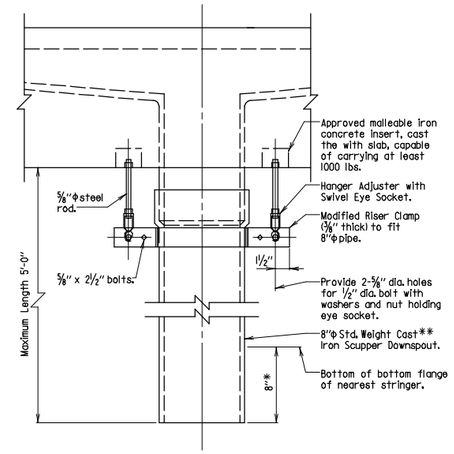

ELEVATION
Scale: 1 1/2" = 1'-0"

* Provided it does not interfere with minimum underclearance over roadway and/or shoulder.
** The downspout may be fiberglass. Color shall match finished bridge paint color. No additional compensation will be allowed for whichever option is chosen.

Notes:
1. All exposed material, except cast iron scupper downspout to be epoxy coated in conformance with Section 465.
2. Exposed portions of cast iron scupper downspout to be coated with coal tar epoxy conforming to Specification SSPC-16.

APPROVAL		
DIRECTOR OFFICE OF STRUCTURES DATE: 4/18/83		
REVISIONS		
SHA	FHWA	
5-12-93		
9-24-96		
1-22-01		
7-14-08		
FHWA APPROVAL DATE: 11-29-85		

STATE OF MARYLAND
DEPARTMENT OF TRANSPORTATION
STATE HIGHWAY ADMINISTRATION
OFFICE OF STRUCTURES

SCUPPER DOWNSPOUT SUPPORT BRACKET FOR SHORT CAST IRON SCUPPER DOWNSPOUT

STANDARD NO. BR-SS(0.07)-83-145 SHEET 1 OF 1

SUPER-OTHER

MARYLAND TRANSPORTATION AUTHORITY
Engineering Division

I-95 FROM MORAVIA ROAD TO THE FORT McHENRY TUNNEL - PHASE 1 - SOUTHBOUND
I-95 (BALTIMORE CITY)

MD SHA STANDARDS DETAILS FOR STRUCTURES

DESIGNED BY K.A.	DRAWN BY J.E.	CHECKED BY D.W.
CONST. REVIEW BY	DATE DECEMBER 2009	SCALE AS SHOWN

ADDENDUMS & REVISIONS

NO.	DESCRIPTION	BY	DATE

CONTRACT NO.
FT 928-000-006

DRAWING NO.
STD-14

SHEET NO.
161 OF 188

r:\49562\dgn\Stds\stds.dgn Friday, December 04, 2009 AT 03:00 PM

FILE: r:\49562\dgn\Stds\stds.dgn
DATE: Friday, December 04, 2009 AT 03:00 PM

GENERAL NOTES

Specifications: Latest SHA Specifications and Special Provisions for materials and construction. Latest AASHTO Standard Specifications for Highway Bridges for design.

Materials: Posts and rails shall conform to ASTM F-1083, Schedule 80. Fabric shall be 6 gauge, 2" PVC coated mesh conforming to 914.01.

All posts, braces, fittings and hardware shall be PVC coated. Coating shall conform to 914.03 except that nuts, bolts and washers shall also be PVC coated and touched up after installation.

All plates shall be steel conforming to ASTM A 709 Grade 36.

Anchor studs or anchor bolts shall conform to ASTM A 276, Type 430 or Type 304 stainless steel annealed, hot-finished, ultimate strength 70 000 psi min., 20% min. elongation. Threads may be rolled or cut.

Epoxy grout for anchor studs in cored holes shall conform to 902.11 (d).

PVC color for all elements of fence shall be black unless otherwise noted.

Construction: All longitudinal rails shall be parallel to top of parapet.

All posts shall be set normal to top of parapet for roadway grades 6% or less. For grades over 6% posts shall be set plumb.

The chain link fence shall be true to line, taut, tight fit to top of parapet, with ½" min. to 1" max. gap, and shall comply with the best practice for fence construction of this type.

Post and rails shall be permanently positioned before fabric is placed.

For post spacing see pertinent structure sheets.

Precoated longitudinal rails, if cut, shall have the cut end coated with PVC touch up material supplied by the manufacturer prior to erection.

If Contractor elects to place anchor studs after placing concrete parapet, newly placed rebars shall be located so that coring does not damage same, all holes shall be cored (not drilled) and the diameter of the cored holes for the anchor studs shall be ⅛".

Measurement and Payment: The furnishing, fabricating, erecting, etc., of all new chain link fence on the bridges, complete in place, will not be measured for payment but all costs thereof shall be included in the Contract lump sum prices for the pertinent Chain Link Safety Fence For Bridge Items.

The furnishing, fabricating, erecting, etc., of all new chain link fence anti-climb shields, complete in place, will be measured and paid for at the Contract unit prices per each for the pertinent Chain Link Safety Fence Anti-Climb Shield Items.

Any defects uncovered by the inspection of welds on base plates and poles shall be repaired or replaced by new members at no additional cost to the Administration.

APPROVAL	STATE OF MARYLAND DEPARTMENT OF TRANSPORTATION STATE HIGHWAY ADMINISTRATION OFFICE OF STRUCTURES
DIRECTOR OFFICE OF STRUCTURES DATE: 6/3/76	CHAIN LINK SAFETY FENCE-NEW STRUCTURES GENERAL NOTES
REVISIONS SHA FHWA: 4-27-94, 11-17-97, 3-13-01, 7-24-01	
FHWA APPROVAL DATE: 11-9-76	NO. BR-SS(3.01)-75-21 SHEET 1 OF 1

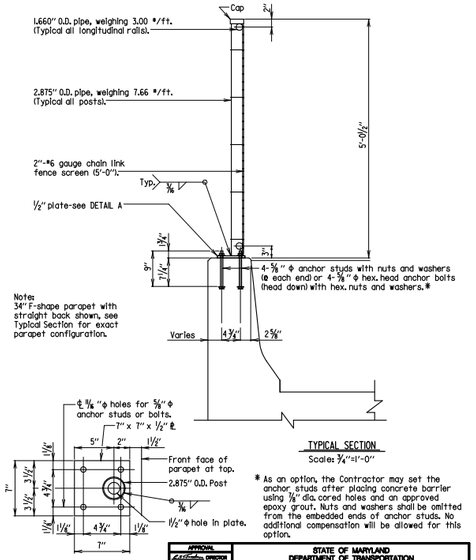

Notes:
34" F-shape parapet with straight back shown, see Typical Section for exact parapet configuration.

TYPICAL SECTION
Scale: ¾"=1'-0"

* As an option, the Contractor may set the anchor studs after placing concrete barrier using ⅞" dia. cored holes and an approved epoxy grout. Nuts and washers shall be omitted from the embedded ends of anchor studs. No additional compensation will be allowed for this option.

DETAIL A
Scales: 1½"=1'-0"

APPROVAL	STATE OF MARYLAND DEPARTMENT OF TRANSPORTATION STATE HIGHWAY ADMINISTRATION OFFICE OF STRUCTURES
DIRECTOR OFFICE OF STRUCTURES DATE: 6/8/76	TYPE II CHAIN LINK SAFETY FENCE FOR NEW STRUCTURES WITH 34" OR 42" F-SHAPE PARAPET
REVISIONS SHA FHWA: 3-22-88, 6-8-90, 11-17-97, 3-21-01, 6-1-05	
FHWA APPROVAL DATE: 11-9-76	STANDARD NO. BR-SS(3.03)-05-23 SHEET 1 OF 3

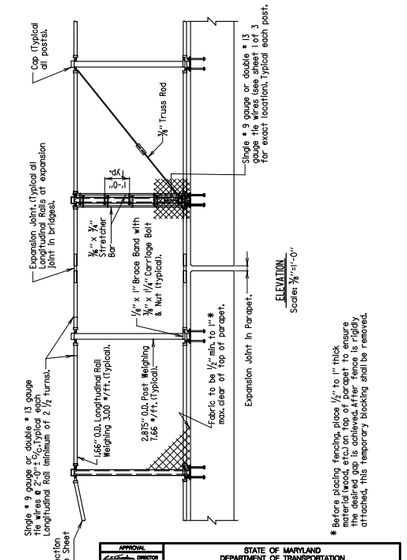

For End Section Details see sheet 3 of 3.

* Before placing fencing, place ½" to 1" thick material (wood, etc.) on top of parapet to ensure the desired gap is achieved. After fence is rigidly attached, this temporary blocking shall be removed.

APPROVAL	STATE OF MARYLAND DEPARTMENT OF TRANSPORTATION STATE HIGHWAY ADMINISTRATION OFFICE OF STRUCTURES
DIRECTOR OFFICE OF STRUCTURES DATE: 6/8/76	TYPE II CHAIN LINK SAFETY FENCE FOR NEW STRUCTURES WITH 34" OR 42" F-SHAPE PARAPET
REVISIONS SHA FHWA: 3-22-88, 6-8-90, 11-17-97, 3-21-01, 6-1-05	
FHWA APPROVAL DATE: 11-9-76	STANDARD NO. BR-SS(3.03)-05-23 SHEET 2 OF 3

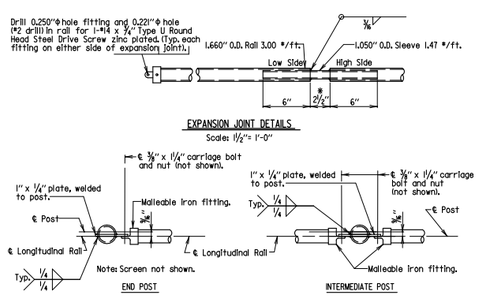

EXPANSION JOINT DETAILS
Scale: 1½"= 1'-0"

TOP LONGITUDINAL RAIL - POST ATTACHMENT
Scale: 1½"= 1'-0"

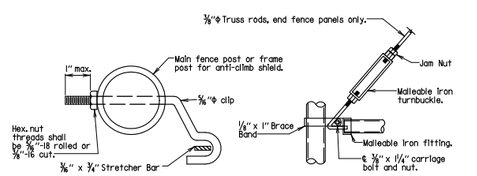

STRETCHER BAR ATTACHMENT
Scale: None

TRUSS ROD ATTACHMENT
Scale: 1½"= 1'-0"

* If opening in parapet is 2½" or less, if opening is greater then this, dimension shall be increased to match proposed movement.

APPROVAL	STATE OF MARYLAND DEPARTMENT OF TRANSPORTATION STATE HIGHWAY ADMINISTRATION OFFICE OF BRIDGE DEVELOPMENT
CHIEF BRIDGE DEVELOPMENT ENGINEER DATE: 6/3/76	CHAIN LINK SAFETY FENCE - NEW STRUCTURES MISCELLANEOUS DETAILS
REVISIONS SHA FHWA: 3-4-87, 6-8-90, 1-22-01	
FHWA APPROVAL DATE: 11-9-76	STANDARD NO. BR-SS(3.04)-75-24 SHEET 1 OF 1

Notes:
1. The Contractor has the option of substituting the Ancel Frame Scaffolding System for steel forms which remain in place with the following exceptions:
   a) Bridges over existing highways.
   b) Bridges over high speed or electrified railroads.
2. Ancel frames may never be used on any fracture critical member.
3. The Contractor has the option of substituting the Ancel Frame Scaffolding System for conventional overhang brackets on fascia stringers with the following exceptions:
   a) Bridges over new or existing highways.
   b) Bridges over navigable waterways with underclearance less than 30 feet.
4. In any instance where studs are allowed they shall remain in place.

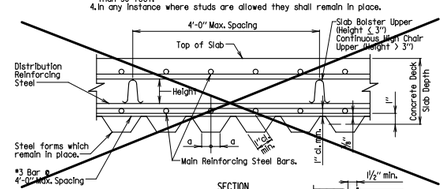

SECTION
Scale: None

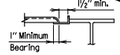

WHERE FORM IS BELOW BOTTOM OF FLANGE AND THERE ARE NO SHEAR CONNECTORS

Notes:
1. Permanent steel deck forms and supports shall conform to 909.11. Design Span shall be the clear distance between beam and/or girder flanges less two (2) inches.
2. No welding of these forms to parts carrying tension will be permitted. These forms shall be vertically adjusted to attain line and grade as required.
3. Any permanently exposed form metal where the galvanized coating has been damaged shall be thoroughly cleaned, wire brushed and painted with two coats of zinc-oxide dust primer, Federal Specification TT-P-641d, Type II, no color added, to the satisfaction of the engineer. Minor heat discoloration in areas of welds need not be touched up.
4. Contractor has option of using this detail or that shown on 2 of 2, except for bridge decks with curved stringers or bridge with a flared rebar pattern. For bridge with curved stringers or bridge with a flared rebar pattern only the detail shown on sheet 2 of 2 can be used.
5. Where shear connectors are utilized, normal manufacturers detailing may be utilized at stringer flange.
6. Supports for rebar shall be provided by Contractor.

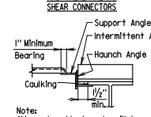

Note:
Alternate attachments will be considered, that provide the 1½" concrete encasement of top flange.

WHERE FORM IS ABOVE BOTTOM OF FLANGE AND THERE ARE NO SHEAR CONNECTORS

APPROVAL	STATE OF MARYLAND DEPARTMENT OF TRANSPORTATION STATE HIGHWAY ADMINISTRATION OFFICE OF STRUCTURES
DIRECTOR OFFICE OF STRUCTURES DATE: 9/8/76	STEEL FORMS WHICH REMAIN IN PLACE FOR CONCRETE SLABS ON STEEL STRINGERS RE-BARS ALIGNED WITH TROUGH
REVISIONS SHA FHWA: 5-2-85, 11-29-85, 8-30-90, 1-4-94, 1-22-01	
FHWA APPROVAL DATE: 11-9-76	NO. BR-SS(6.06)-75-29 SHEET 1 OF 2

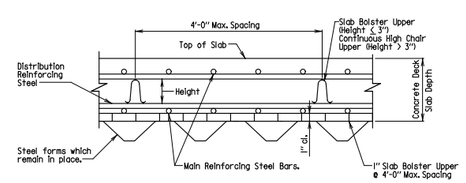

SECTION
Scale: None

Notes:
1. For notes see sheet 1 of 2.
2. This detail is acceptable only on structures where the General Notes under "Loading" states "and 15 pounds per square foot for use of steel bridge deck forms which remain in place."
3. Supports for rebar shall be provided by Contractor.

APPROVAL	STATE OF MARYLAND DEPARTMENT OF TRANSPORTATION STATE HIGHWAY ADMINISTRATION OFFICE OF STRUCTURES
DIRECTOR OFFICE OF STRUCTURES DATE: 1/29/90	STEEL FORMS WHICH REMAIN IN PLACE FOR CONCRETE SLABS ON STEEL STRINGERS RE-BARS INDEPENDENT WITH TROUGH
REVISIONS SHA FHWA: 8-30-90, 11-18-04	
FHWA APPROVAL DATE: 6-20-80	NO. BR-SS(6.06)-75-29 SHEET 2 OF 2

MARYLAND TRANSPORTATION AUTHORITY

Engineering Division

I-95 FROM MORAVIA ROAD TO THE FORT McHENRY TUNNEL - PHASE 1 - SOUTHBOUND

I-95 (BALTIMORE CITY)
BCW596-2

DESIGNED BY J.T.L.	DRAWN BY W.R.A.	CHECKED BY W.A.G.
CONST. REVIEW BY	DATE DECEMBER 2009	SCALE AS SHOWN

ADDENDUMS & REVISIONS

NO.	DESCRIPTION	BY	DATE

CONTRACT NO. FT 928-000-006

DRAWING NO. **STD-15**

SHEET NO. 162 OF 188

n:\3l549-021\CADD\FT-928\FT-928_Standards.dgn 10-28-2009

FILE: n:\3l549-021\CADD\FT-928\FT-928_Standards.dgn
DATE: 10-28-2009

SCHEDULE OF PROPOSAL ITEMS

CAT. CODE NO	DESCRIPTION	UNIT	QUANTITY

GENERAL NOTES

CRITERIA

THE CONTRACTOR SHALL BE GOVERNED BY THE STANDARDS AND REQUIREMENTS OF THE FOLLOWING PUBLICATIONS, EXCEPT AS MODIFIED BY THE SPECIAL PROVISIONS OF THIS CONTRACT.

DESIGN

F H W A - "MANUAL ON UNIFORM TRAFFIC CONTROL DEVICES", 2003 EDITION AND SUBSEQUENT REVISIONS. (M.U.T.C.D.)

A A S H T O - "HIGHWAY SAFETY DESIGN AND OPERATIONS GUIDE" -1997

A A S H T O - "STANDARD SPECIFICATIONS FOR STRUCTURAL SUPPORTS FOR HIGHWAY SIGNS, LUMINAIRES AND TRAFFIC SIGNALS", 2001 EDITION. (CATEGORY II FOR ALL OVERHEAD AND CANTILEVER SIGN STRUCTURES).

MSHA - "MARYLAND MANUAL ON UNIFORM TRAFFIC CONTROL DEVICES," 2006 EDITION AND SUBSEQUENT REVISIONS. (MD M.U.T.C.D.)

MATERIALS AND CONSTRUCTION

MSHA - "STANDARD SPECIFICATIONS FOR CONSTRUCTION & MATERIALS", 2008 EDITION AND SUBSEQUENT SUPPLEMENTS.

DESIGN WIND

100 MPH - WOOD SUPPORTS
10 YEAR RECURRENCE INTERVAL

100 MPH - GROUND MOUNT SIGN STEEL SUPPORTS
10 YEAR RECURRENCE INTERVAL

100 MPH - OVERHEAD AND CANTILEVER STRUCTURES
50 YEAR RECURRENCE INTERVAL

} ALL COUNTIES

DESIGN STRESS

SOIL BEARING PRESSURE - S = 3,000 P.S.F. (ASSUMED)

SEE MATERIALS & CONSTRUCTION AND SPECIAL PROVISIONS FOR DESIGN STRESSES FOR STRUCTURAL STEEL, ALUMINUM, REINFORCING STEEL AND CONCRETE.

CHAMFER

ALL EXPOSED EDGES OF CONCRETE SHALL HAVE A 3/4" X 3/4" CHAMFER.

CLASSIFICATION OF SIGNS

SIGNS ARE DIVIDED INTO TWO (2) GENERAL CATEGORIES.

1 GUIDE SIGNS
- A) STRUCTURAL TYPES
  - OH - OVERHEAD
  - C - CANTILEVER
  - GM - GROUND MOUNT, BREAKAWAY OR NON-BREAKWAY
  - BM - BRIDGE MOUNTED
- B) PANELS
  - MATERIAL - EXTRUDED ALUMINUM
  - COPY - DEMOUNTABLE
    - *SEE NOTE 1 UNDER PROJECT REQUIREMENTS

2 STANDARD SIGNS (REGULATORY, WARNING, ETC.)
- A) STRUCTURAL TYPES
  - WOOD SUPPORTS
  - TUBULAR STEEL POST
- B) PANELS
  - MATERIAL - SHEET ALUMINUM
  - COPY - NON-DEMOUNTABLE
    - *SEE NOTE 1 UNDER PROJECT REQUIREMENTS

IDENTIFICATION OF SIGNS AND PANELS

GUIDE SIGNS

EACH GUIDE SIGN IS IDENTIFIED BY A SIGN NUMBER ON THE PLANS AND IN THE TABULATIONS. PANELS ON GUIDE SIGNS ARE IDENTIFIED WITH A NUMBER AND WHERE VARIATIONS OCCUR, A LOWER CASE LETTER.

STANDARD SIGNS

STANDARD SIGNS ARE IDENTIFIED BY PANEL NUMBERS AND ARE CLASSIFIED AS FOLLOWS
- R - REGULATORY
- W - WARNING
- M - ROUTE MARKERS AND ACCESSORIES
- D - DESTINATION AND MILEAGE PANELS
- S - SCHOOL

PANELS SHALL BE DESIGNATED TO AGREE WITH THE FHWA STANDARD HIGHWAY SIGN BOOK (SHS) AND MSHA & MDTA STANDARD SIGN BOOKS.

PANEL LAYOUT AND ALPHABETS

1. GUIDE SIGN PANEL LAYOUTS ARE BASED ON THE FHWA MANUAL NOTED ABOVE.
2. STANDARD SIGN PANEL LAYOUTS ARE BASED ON THE M.U.T.C.D. WITH SPECIFICATIONS DETAILED IN THE MOST CURRENT EDITIONS OF THE FHWA (SHS) AND MSHA & MDTA STANDARD SIGN BOOKS.

REFLECTORIZATION

BACKGROUNDS, BORDERS, TEXTS AND ALL OTHER ELEMENTS OF SIGN PANELS SHALL BE REFLECTORIZED EXCEPT WHERE NOTED.

SIGN LOCATIONS

1. GUIDE SIGNS ARE LOCATED ON THE PLANS BY DIMENSION TO SURVEY STATIONS, OR WHEN NECESSARY, TO IDENTIFIABLE PHYSICAL FEATURES.
2. ALL CHANGES IN THE LOCATIONS OF SIGNS AS SHOWN ON THE PLAN SHALL HAVE THE PRIOR APPROVAL OF THE TRAFFIC MANAGER.

EXISTING UTILITIES

THE ENGINEER DOES NOT WARRANT OR GUARANTEE THE ACCURACY OR COMPLETENESS OF UTILITY INFORMATION SHOWN ON THE PLAN. IT SHALL BE THE RESPONSIBILITY OF THE CONTRACTOR TO LOCATE AND PROTECT ALL EXISTING FACILITIES WHICH MIGHT BE AFFECTED BY THIS WORK OR HIS OPERATION. THE CONTRACTOR SHALL NOTIFY MISS UTILITY AT 1-800-257-7777 AND MR. FRANK MURPHY OF BALTIMORE CITY DOT (410) 396-6872 AND MR JEFF ROBSON OF THE MDTA UTILITY OFFICES AT (410) 537-1274 AT LEAST 72 HOURS PRIOR TO THE START OF EXCAVATION.

ORIENTATION OF SIGN FACES

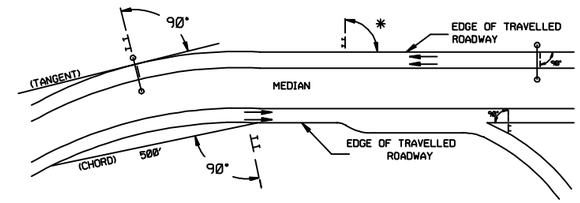

* UNDER 30 FEET FROM TRAVELLED ROADWAY TO NEAR EDGE OF SIGN - 93° TO AVOID SPECULAR REFLECTION AS INDICATED IN 813.03 OF THE MARYLAND STANDARD SPECIFICATIONS FOR CONSTRUCTION AND MATERIALS.
OVER 30 FEET FROM TRAVELED ROADWAY TO NEAR EDGE OF SIGN - 90°

ROADSIDE SIGNS

1. VERTICAL ALIGNMENT
   POSITION PANEL SO FACE IS PLUMB.
2. HORIZONTAL ALIGNMENT (SEE DIAGRAM ABOVE)
   - A). ON STRAIGHT ROADWAY SECTIONS, ANGLE OF SIGN FACE TO ROADWAY VARIES WITH DISTANCE FROM TRAVELLED ROADWAY TO NEAR EDGE OF SIGN - SEE DIAGRAM.
   - B). ON THE INSIDE OF HORIZONTAL CURVES, POSITION SIGN SO FACE OF PANEL MAKES AN ANGLE OF 90° WITH A CHORD BETWEEN A POINT ON NEAR EDGE OF PAVEMENT AT SIGN LOCATION AND A POINT ON EDGE OF PAVEMENT 500' IN ADVANCE OF SIGN.
   - C). ON THE OUTSIDE OF HORIZONTAL CURVES, POSITION SIGN SO FACE OF PANEL IS AT RIGHT ANGLES TO THE TANGENT OF THE CURVE AT THE SIGN LOCATION.
   - D.) POSITIONING OF SIGNS AT GORES AND RAMP SEPARATIONS IS REFERRED TO THE NORMAL EDGE OF THE MAINLINE ROADWAY.

OVERHEAD SIGNS

1. VERTICAL ALIGNMENT
   POSITION PANELS FOR ALL OVERHEAD STRUCTURES SO THAT PANEL FACE IS PLUMB.
2. OVERHEAD SIGN STRUCTURES SHALL BE ERECTED WITH LUMINAIRE SUPPORTS AND SIGN(S) ATTACHED.
3. HORIZONTAL ALIGNMENT
   - A). POSITION ALL OVERHEAD SIGNS SO THAT THE FACE OF THE PANEL IS AT RIGHT ANGLES TO THE NORMAL EDGE OF ROADWAY, IF ON A STRAIGHT ROADWAY SECTION.
   - B). POSITION ALL OVERHEAD SIGNS SO THAT THE FACE OF THE PANEL IS AT RIGHT ANGLES TO THE TANGENT OF THE CURVE AT SIGN LOCATION, IF ON A HORIZONTAL CURVE.
   - C). POSITIONING OF SIGNS AT GORES AND RAMP SEPARATIONS IS REFERRED TO THE NORMAL EDGE OF THE MAINLINE ROADWAY.
4. VERTICAL CLEARANCE
   - A). OVERHEAD SIGNS SHALL HAVE A MINIMUM VERTICAL CLEARANCE OF 17'-9" FROM ROADWAY TO THE BOTTOM OF LIGHT FIXTURES. ALL LIGHT FIXTURES ARE TO BE AT THE SAME ELEVATION.
   - B). IF THE CONTRACTOR CANNOT OBTAIN 17'-9" (SEE 4A) CLEARANCE, HE IS TO CEASE WORK AND CONTACT THE PROJECT ENGINEER FOR FURTHER INSTRUCTIONS. THE PROJECT ENGINEER MAY CONTACT THE TRAFFIC MANAGER FOR ASSISTANCE.
   - C). ON UNLIT OVERHEAD SIGNS, THE MINIMUM CLEARANCE TO BOTTOM OF SIGN SHALL BE 20'-9".

PROJECT REQUIREMENTS

1. ALL NEW SIGNS ON THIS PROJECT ARE TO HAVE NON-REFLECTIVE (BLACK COPY AND BACKGROUND) OR RETROREFLECTIVE (ALL OTHER COLORS) SHEETING BACKGROUND AND COPY AS SPECIFIED IN THE CONTRACT DOCUMENTS.
2. ALL NEW EXTRUDED ALUMINUM PANELS ARE TO HAVE DEMOUNTABLE COPY.
3. ALL NEW SHEET ALUMINUM SIGNS ARE TO HAVE NON-DEMOUNTABLE COPY.
4. THE FOLLOWING MINIMUM THICKNESS SHALL BE USED FOR THE APPROPRIATE WIDTH OF SHEET ALUMINUM BLANKS.

LONGEST DIMENSION	MINIMUM THICKNESS
UP TO 12"	0.040"
GREATER THAN 12" TO 24"	0.063"
GREATER THAN 24" TO 36"	0.080"
GREATER THAN 36" TO 48"	0.100"
OVER 48"	0.125"

RK&K
81 MOSHER STREET | BALTIMORE, MD 21217
PH: (410) 728-2900 FAX: (410) 728-3160
Engineers Construction Managers Planners Scientists
www.rkk.com

MARYLAND TRANSPORTATION AUTHORITY
Engineering Division

ADDENDUMS & REVISIONS

NO.	DESCRIPTION	BY	DATE

I-95 FROM MORAVIA ROAD TO THE FORT McHENRY TUNNEL - PHASE 1 - SOUTHBOUND
I-95 (BALTIMORE CITY)
GENERAL NOTES AND PROPOSALS

CONTRACT NO. FT 928-000-006
DRAWING NO. SN-1

DESIGNED BY MLH | DRAWN BY MLH | CHECKED BY BLB
CONST. REVIEW BY | DATE DECEMBER 2009 | SCALE NONE
SHEET NO. 163 OF 188

PAVEMENT MARKING LEGEND

- Ⓐ FURNISH AND INSTALL 5 IN. WHITE PERMANENT PREFORMED PATTERNED REFLECTIVE PAVEMENT MARKINGS
- Ⓑ FURNISH AND INSTALL 5 IN. WHITE SKIP PERMANENT PREFORMED PATTERNED REFLECTIVE PAVEMENT MARKING (10 FT. LINE 30 FT. GAP)
- Ⓒ FURNISH AND INSTALL 5 IN. YELLOW PERMANENT PREFORMED PATTERNED REFLECTIVE PAVEMENT MARKINGS
- Ⓓ FURNISH AND INSTALL 10 IN. WHITE PERMANENT PREFORMED PATTERNED REFLECTIVE PAVEMENT MARKINGS
- Ⓔ FURNISH AND INSTALL 10 IN. WHITE SKIP PERMANENT PREFORMED PATTERNED REFLECTIVE PAVEMENT MARKINGS (3 FT. LINE 9 FT. GAP).
- Ⓕ FURNISH AND INSTALL 16 IN. WHITE PERMANENT PREFORMED PATTERNED REFLECTIVE PAVEMENT MARKINGS (SEE PAVEMENT MARKING GENERAL NOTE 1 FOR DETAILS)
- Ⓖ FURNISH AND INSTALL PLOWABLE RAISED PAVEMENT MARKERS (SEE PAVEMENT MARKING GENERAL NOTE 2 FOR DETAILS)
- Ⓗ FURNISH AND INSTALL 5 IN. WHITE SKIP PERMANENT PREFORMED PATTERNED REFLECTIVE CONTRAST PAVEMENT MARKING (10 FT. LINE 30 FT. GAP)
- Ⓙ FURNISH AND INSTALL 10 IN. WHITE SKIP PERMANENT PREFORMED PATTERNED REFLECTIVE CONTRAST PAVEMENT MARKINGS (3 FT. LINE 9 FT. GAP).
- Ⓚ FURNISH AND INSTALL 5 IN. YELLOW PERMANENT PREFORMED PATTERNED REFLECTIVE CONTRAST PAVEMENT MARKINGS.
- Ⓛ FURNISH AND INSTALL 5 IN. WHITE PERMANENT PREFORMED PATTERNED REFLECTIVE CONTRAST PAVEMENT MARKINGS.
- Ⓜ FURNISH AND INSTALL 10 IN. WHITE PERMANENT PREFORMED PATTERNED REFLECTIVE CONTRAST PAVEMENT MARKINGS.

PAVEMENT MARKING GENERAL NOTES

1. USE THE MD MUTCD STANDARD FIGURE 3B-9e DIMENSIONS WHEN INSTALLING HATCHING IN GORE AREAS.
2. USE THE MD MUTCD STANDARD FIGURE 3B-10 DIMENSIONS WHEN INSTALLING RAISED PAVEMENT MARKERS.
3. CONTRACTOR SHALL NOT PLACE FINAL PAVEMENT MARKINGS ON INLETS OR SCUPPER GRATES.

SIGNING GENERAL NOTE

1. PROPOSED SIGN TO BE BANDED TO FENCE POST USING MDSHA STANDARD NO. MD 813.08.

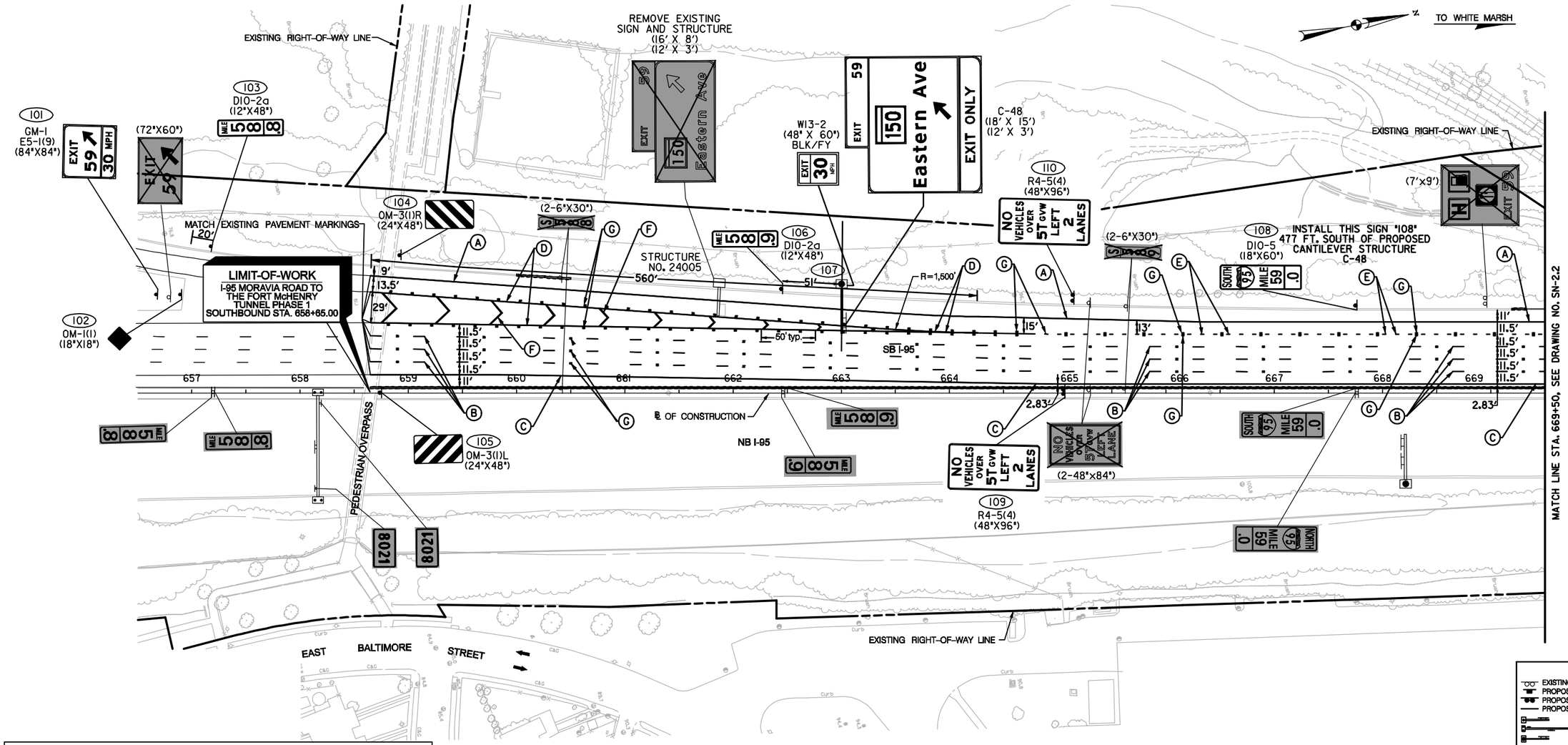

SIGN LIGHTING SCHEDULE					
STRUCTURE NUMBER	NO. OF LUMINAIRES	WATTAGE	OPERATING VOLTAGE	SPACE (FEET)	REMARKS
C-48	5N	150	277V	1.8/3.6/3.6/3.6/3.6/1.8	ICELS-NARROW DISTRIBUTION

LEGEND

- EXISTING GROUND MOUNTED SUPPORT AND SIGN
- PROPOSED BRIDGE MOUNTED SUPPORT AND SIGN
- PROPOSED GROUND MOUNTED SUPPORT AND SIGN
- PROPOSED FENCE MOUNTED SUPPORT AND SIGN
- EXISTING CANTILEVER STRUCTURE
- EXISTING OVERHEAD STRUCTURE
- PROPOSED CANTILEVER STRUCTURE
- PROPOSED OVERHEAD STRUCTURE
- EXISTING SIGN
- EXISTING SIGN AND SUPPORT TO BE REMOVED
- PROPOSED SIGN

RK&K
81 MOSHER STREET | BALTIMORE, MD 21217
PH: (410) 728-2900 FAX: (410) 728-3160
Engineers Construction Managers Planners Scientists
www.rkk.com

MARYLAND TRANSPORTATION AUTHORITY
Engineering Division

ADDENDUMS & REVISIONS			
NO.	DESCRIPTION	BY	DATE

I-95 FROM MORAVIA ROAD TO THE FORT McHENRY TUNNEL - PHASE 1 - SOUTHBOUND

I-95 (BALTIMORE CITY)

SIGNING AND PAVEMENT MARKING PLAN

DESIGNED BY MLH	DRAWN BY MLH	CHECKED BY BLB	
CONST. REVIEW BY	DATE DECEMBER 2009	SCALE AS SHOWN	

CONTRACT NO. FT 928-000-006

DRAWING NO. SN-2.1

SHEET NO. 164 OF 188

PAVEMENT MARKING GENERAL NOTES

1. USE THE MD MUTCD STANDARD FIGURE 3B-9e DIMENSIONS WHEN INSTALLING HATCHING IN GORE AREAS.
2. USE THE MD MUTCD STANDARD FIGURE 3B-10 DIMENSIONS WHEN INSTALLING RAISED PAVEMENT MARKERS.
3. CONTRACTOR SHALL NOT PLACE FINAL PAVEMENT MARKINGS ON INLETS OR SCUPPER GRATES.

SIGNING GENERAL NOTE

1. PROPOSED SIGN TO BE BANDED TO FENCE POST USING MDSHA STANDARD NO. MD 813.08.

PAVEMENT MARKING LEGEND

Ⓐ FURNISH AND INSTALL 5 IN. WHITE PERMANENT PREFORMED PATTERNED REFLECTIVE PAVEMENT MARKINGS
Ⓑ FURNISH AND INSTALL 5 IN. WHITE SKIP PERMANENT PREFORMED PATTERNED REFLECTIVE PAVEMENT MARKING (10 FT. LINE 30 FT. GAP)
Ⓒ FURNISH AND INSTALL 5 IN. YELLOW PERMANENT PREFORMED PATTERNED REFLECTIVE PAVEMENT MARKINGS
Ⓓ FURNISH AND INSTALL 10 IN. WHITE PERMANENT PREFORMED PATTERNED REFLECTIVE PAVEMENT MARKINGS
Ⓔ FURNISH AND INSTALL 10 IN. WHITE SKIP PERMANENT PREFORMED PATTERNED REFLECTIVE PAVEMENT MARKINGS (3 FT. LINE 9 FT. GAP).
Ⓕ FURNISH AND INSTALL 16 IN. WHITE PERMANENT PREFORMED PATTERNED REFLECTIVE PAVEMENT MARKINGS (SEE PAVEMENT MARKING GENERAL NOTE 1 FOR DETAILS)
Ⓖ FURNISH AND INSTALL PLOWABLE RAISED PAVEMENT MARKERS (SEE PAVEMENT MARKING GENERAL NOTE 2 FOR DETAILS)
Ⓗ FURNISH AND INSTALL 5 IN. WHITE SKIP PERMANENT PREFORMED PATTERNED REFLECTIVE CONTRAST PAVEMENT MARKING (10 FT. LINE 30 FT. GAP)
Ⓙ FURNISH AND INSTALL 10 IN. WHITE SKIP PERMANENT PREFORMED PATTERNED REFLECTIVE CONTRAST PAVEMENT MARKINGS (3 FT. LINE 9 FT. GAP).
Ⓚ FURNISH AND INSTALL 5 IN. YELLOW PERMANENT PREFORMED PATTERNED REFLECTIVE CONTRAST PAVEMENT MARKINGS.
Ⓛ FURNISH AND INSTALL 5 IN. WHITE PERMANENT PREFORMED PATTERNED REFLECTIVE CONTRAST PAVEMENT MARKINGS.
Ⓜ FURNISH AND INSTALL 10 IN. WHITE PERMANENT PREFORMED PATTERNED REFLECTIVE CONTRAST PAVEMENT MARKINGS.

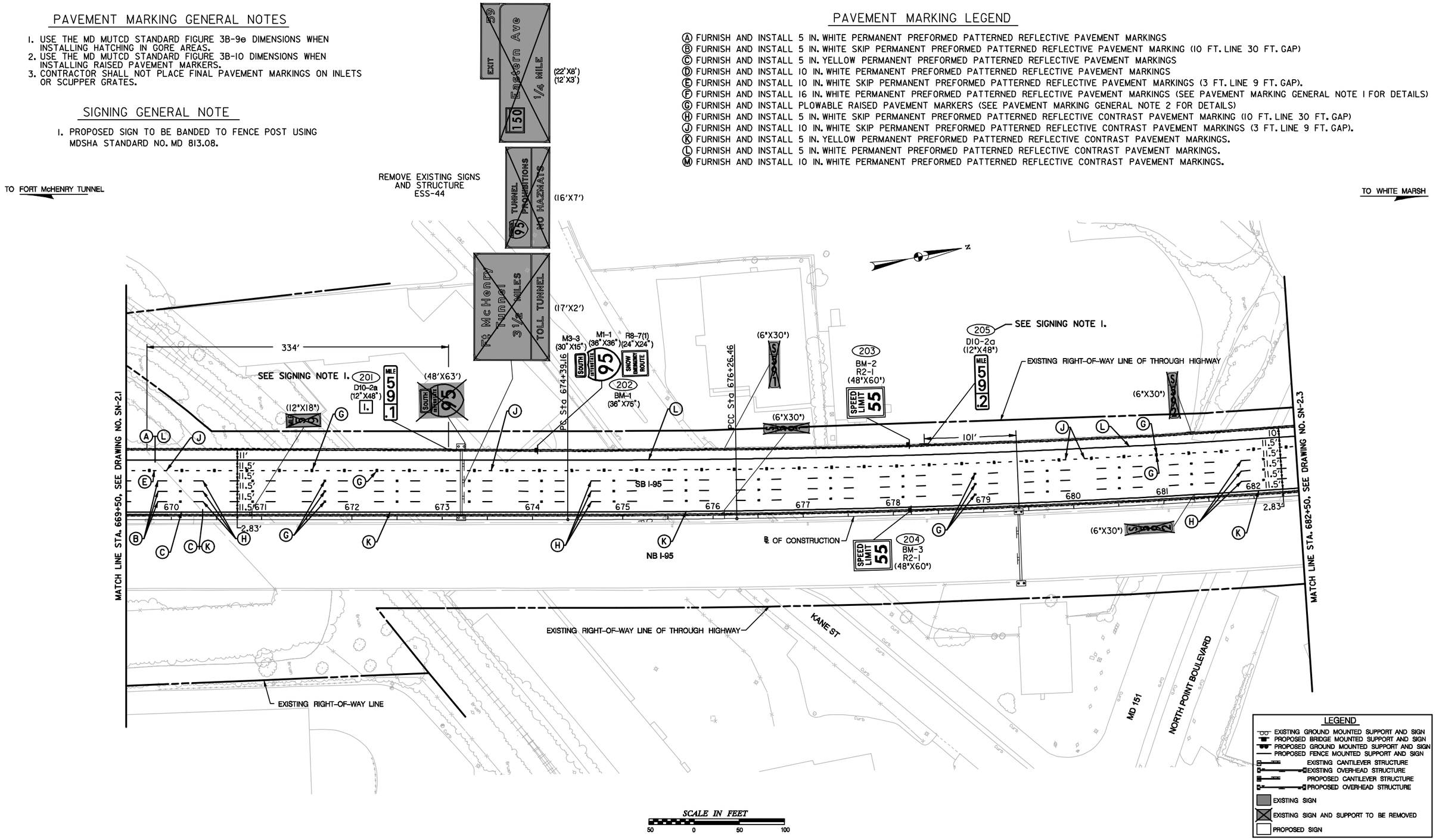

RK&K
81 MOSHER STREET | BALTIMORE, MD 21217
PH: (410) 728-2900 FAX: (410) 728-3160
Engineers Construction Managers Planners Scientists
www.rkk.com

MARYLAND TRANSPORTATION AUTHORITY
Engineering Division

ADDENDUMS & REVISIONS			
NO.	DESCRIPTION	BY	DATE

I-95 FROM MORAVIA ROAD TO THE FORT McHENRY TUNNEL - PHASE 1 - SOUTHBOUND

I-95 (BALTIMORE CITY)

SIGNING AND PAVEMENT MARKING PLAN

DESIGNED BY MLH	DRAWN BY MLH	CHECKED BY BLB	
CONST. REVIEW BY	DATE DECEMBER 2009	SCALE AS SHOWN	

CONTRACT NO. FT 928-000-006

DRAWING NO. SN-2.2

SHEET NO. 165 OF 188

SIGNING GENERAL NOTE

1. PROPOSED SIGN TO BE BANDED TO FENCE POST USING MDSHA STANDARD NO. MD 813.08.

PAVEMENT MARKING LEGEND

- Ⓐ FURNISH AND INSTALL 5 IN. WHITE PERMANENT PREFORMED PATTERNED REFLECTIVE PAVEMENT MARKINGS
- Ⓑ FURNISH AND INSTALL 5 IN. WHITE SKIP PERMANENT PREFORMED PATTERNED REFLECTIVE PAVEMENT MARKING (10 FT. LINE 30 FT. GAP)
- Ⓒ FURNISH AND INSTALL 5 IN. YELLOW PERMANENT PREFORMED PATTERNED REFLECTIVE PAVEMENT MARKINGS
- Ⓓ FURNISH AND INSTALL 10 IN. WHITE PERMANENT PREFORMED PATTERNED REFLECTIVE PAVEMENT MARKINGS
- Ⓔ FURNISH AND INSTALL 10 IN. WHITE SKIP PERMANENT PREFORMED PATTERNED REFLECTIVE PAVEMENT MARKINGS (3 FT. LINE 9 FT. GAP).
- Ⓕ FURNISH AND INSTALL 16 IN. WHITE PERMANENT PREFORMED PATTERNED REFLECTIVE PAVEMENT MARKINGS (SEE PAVEMENT MARKING GENERAL NOTE 1 FOR DETAILS)
- Ⓖ FURNISH AND INSTALL PLOWABLE RAISED PAVEMENT MARKERS (SEE PAVEMENT MARKING GENERAL NOTE 2 FOR DETAILS)
- Ⓗ FURNISH AND INSTALL 5 IN. WHITE SKIP PERMANENT PREFORMED PATTERNED REFLECTIVE CONTRAST PAVEMENT MARKING (10 FT. LINE 30 FT. GAP)
- Ⓙ FURNISH AND INSTALL 10 IN. WHITE SKIP PERMANENT PREFORMED PATTERNED REFLECTIVE CONTRAST PAVEMENT MARKINGS (3 FT. LINE 9 FT. GAP).
- Ⓚ FURNISH AND INSTALL 5 IN. YELLOW PERMANENT PREFORMED PATTERNED REFLECTIVE CONTRAST PAVEMENT MARKINGS.
- Ⓛ FURNISH AND INSTALL 5 IN. WHITE PERMANENT PREFORMED PATTERNED REFLECTIVE CONTRAST PAVEMENT MARKINGS.
- Ⓜ FURNISH AND INSTALL 10 IN. WHITE PERMANENT PREFORMED PATTERNED REFLECTIVE CONTRAST PAVEMENT MARKINGS.

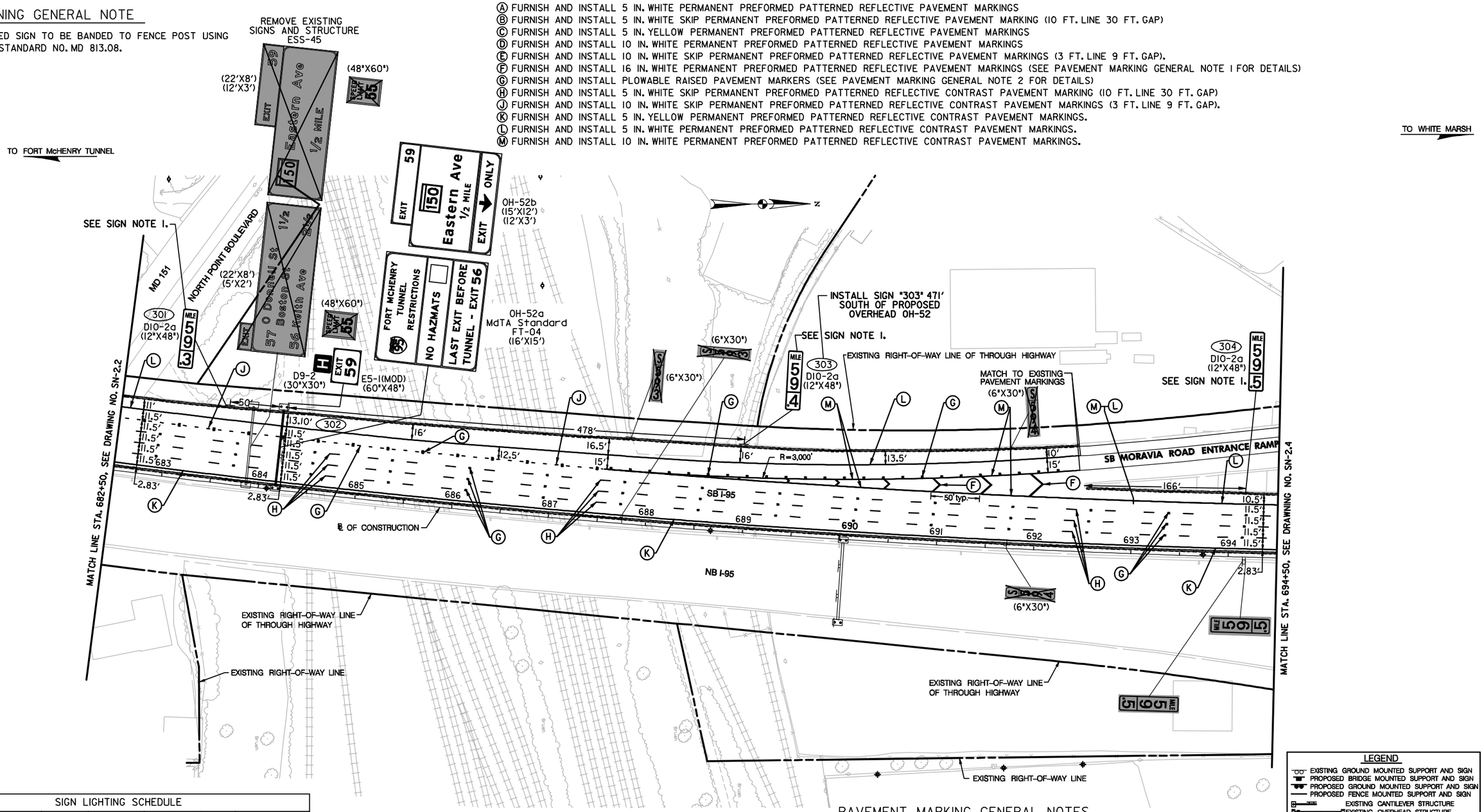

SIGN LIGHTING SCHEDULE					
STRUCTURE NUMBER	NO. OF LUMINAIRES	WATTAGE	OPERATING VOLTAGE	SPACE (FEET)	REMARKS
OH-52a	5N	150	277V	1.6/3.2/3.2/3.2/3.2/1.6	ICELS-NARROW DISTRIBUTION
OH-52b	5N	150	277V	1.5/3/3/3/3/1.5	ICELS-NARROW DISTRIBUTION

SCALE IN FEET
50 0 50 100

PAVEMENT MARKING GENERAL NOTES

1. USE THE MD MUTCD STANDARD FIGURE 3B-9e DIMENSIONS WHEN INSTALLING HATCHING IN GORE AREAS.
2. USE THE MD MUTCD STANDARD FIGURE 3B-10 DIMENSIONS WHEN INSTALLING RAISED PAVEMENT MARKERS.
3. CONTRACTOR SHALL NOT PLACE FINAL PAVEMENT MARKINGS ON INLETS OR SCUPPER GRATES.

LEGEND

- EXISTING GROUND MOUNTED SUPPORT AND SIGN
- PROPOSED BRIDGE MOUNTED SUPPORT AND SIGN
- PROPOSED GROUND MOUNTED SUPPORT AND SIGN
- PROPOSED FENCE MOUNTED SUPPORT AND SIGN
- EXISTING CANTILEVER STRUCTURE
- EXISTING OVERHEAD STRUCTURE
- PROPOSED CANTILEVER STRUCTURE
- PROPOSED OVERHEAD STRUCTURE
- EXISTING SIGN
- EXISTING SIGN AND SUPPORT TO BE REMOVED
- PROPOSED SIGN

RK&K
81 MOSHER STREET | BALTIMORE, MD 21217
PH: (410) 728-2900 FAX: (410) 728-3160
Engineers Construction Managers Planners Scientists
www.rkk.com

MARYLAND TRANSPORTATION AUTHORITY
Engineering Division

ADDENDUMS & REVISIONS			
NO.	DESCRIPTION	BY	DATE

I-95 FROM MORAVIA ROAD TO THE FORT McHENRY TUNNEL - PHASE 1 - SOUTHBOUND

I-95 (BALTIMORE CITY)

SIGNING AND PAVEMENT MARKING PLAN

DESIGNED BY MLH	DRAWN BY MLH	CHECKED BY BLB
CONST. REVIEW BY	DATE DECEMBER 2009	SCALE AS SHOWN

CONTRACT NO. FT 928-000-006

DRAWING NO. SN-2.3

SHEET NO. 166 OF 188

PAVEMENT MARKING LEGEND

Ⓐ FURNISH AND INSTALL 5 IN. WHITE PERMANENT PREFORMED PATTERNED REFLECTIVE PAVEMENT MARKINGS
Ⓑ FURNISH AND INSTALL 5 IN. WHITE SKIP PERMANENT PREFORMED PATTERNED REFLECTIVE PAVEMENT MARKING (10 FT. LINE 30 FT. GAP)
Ⓒ FURNISH AND INSTALL 5 IN. YELLOW PERMANENT PREFORMED PATTERNED REFLECTIVE PAVEMENT MARKINGS
Ⓓ FURNISH AND INSTALL 10 IN. WHITE PERMANENT PREFORMED PATTERNED REFLECTIVE PAVEMENT MARKINGS
Ⓔ FURNISH AND INSTALL 10 IN. WHITE SKIP PERMANENT PREFORMED PATTERNED REFLECTIVE PAVEMENT MARKINGS (3 FT. LINE 9 FT. GAP).
Ⓕ FURNISH AND INSTALL 16 IN. WHITE PERMANENT PREFORMED PATTERNED REFLECTIVE PAVEMENT MARKINGS (SEE PAVEMENT MARKING GENERAL NOTE 1 FOR DETAILS)
Ⓖ FURNISH AND INSTALL PLOWABLE RAISED PAVEMENT MARKERS (SEE PAVEMENT MARKING GENERAL NOTE 2 FOR DETAILS)
Ⓗ FURNISH AND INSTALL 5 IN. WHITE SKIP PERMANENT PREFORMED PATTERNED REFLECTIVE CONTRAST PAVEMENT MARKING (10 FT. LINE 30 FT. GAP)
Ⓙ FURNISH AND INSTALL 10 IN. WHITE SKIP PERMANENT PREFORMED PATTERNED REFLECTIVE CONTRAST PAVEMENT MARKINGS (3 FT. LINE 9 FT. GAP).
Ⓚ FURNISH AND INSTALL 5 IN. YELLOW PERMANENT PREFORMED PATTERNED REFLECTIVE CONTRAST PAVEMENT MARKINGS.
Ⓛ FURNISH AND INSTALL 5 IN. WHITE PERMANENT PREFORMED PATTERNED REFLECTIVE CONTRAST PAVEMENT MARKINGS.
Ⓜ FURNISH AND INSTALL 10 IN. WHITE PERMANENT PREFORMED PATTERNED REFLECTIVE CONTRAST PAVEMENT MARKINGS.

PAVEMENT MARKING GENERAL NOTES

1. USE THE MD MUTCD STANDARD FIGURE 3B-9e DIMENSIONS WHEN INSTALLING HATCHING IN GORE AREAS.
2. USE THE MD MUTCD STANDARD FIGURE 3B-10 DIMENSIONS WHEN INSTALLING RAISED PAVEMENT MARKERS.
3. CONTRACTOR SHALL NOT PLACE FINAL PAVEMENT MARKINGS ON INLETS OR SCUPPER GRATES.

SIGNING GENERAL NOTE

1. PROPOSED SIGN TO BE BANDED TO FENCE POST USING MDSHA STANDARD NO. MD 813.08.

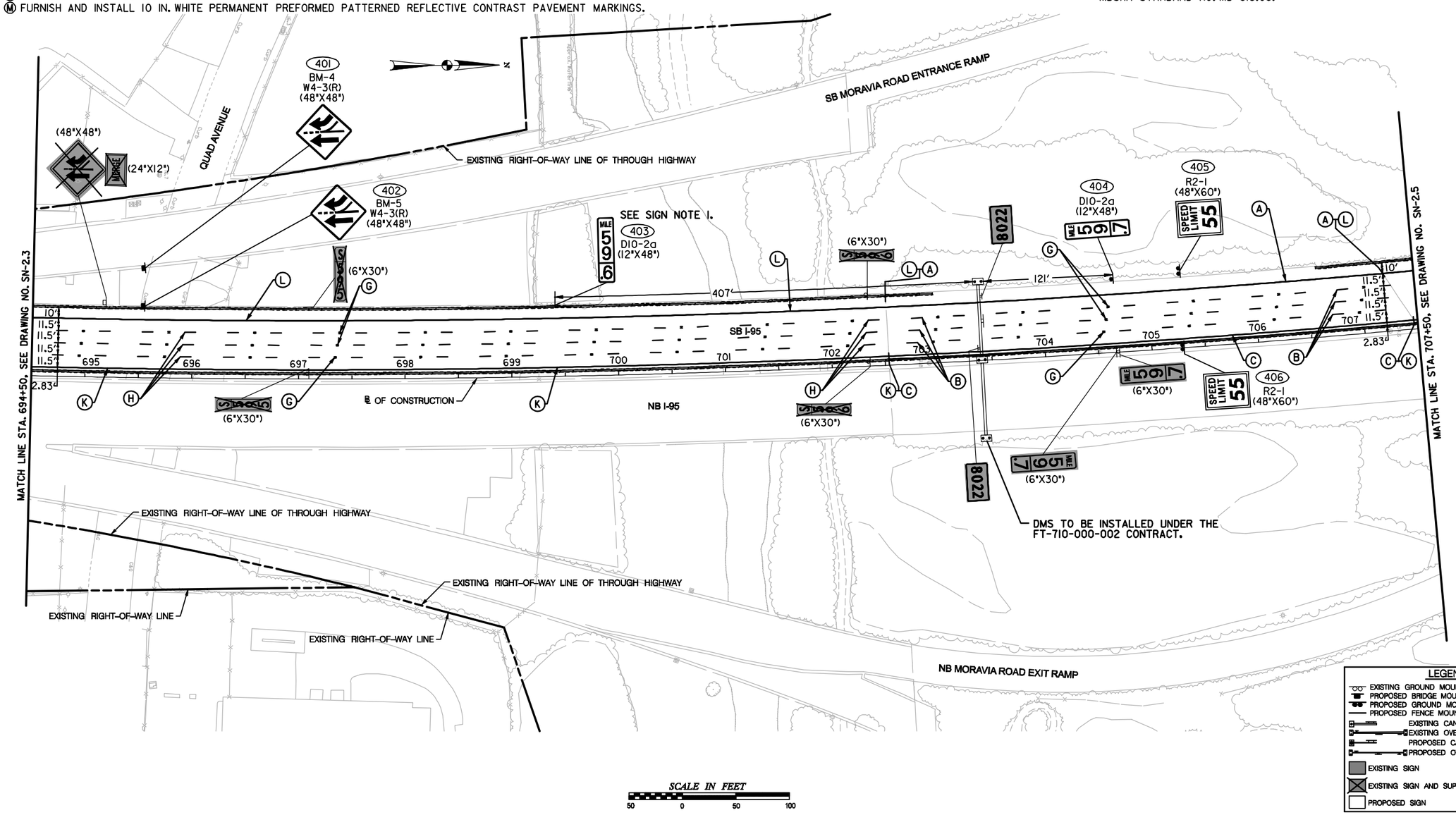

LEGEND

- EXISTING GROUND MOUNTED SUPPORT AND SIGN
- PROPOSED BRIDGE MOUNTED SUPPORT AND SIGN
- PROPOSED GROUND MOUNTED SUPPORT AND SIGN
- PROPOSED FENCE MOUNTED SUPPORT AND SIGN
- EXISTING CANTILEVER STRUCTURE
- EXISTING OVERHEAD STRUCTURE
- PROPOSED CANTILEVER STRUCTURE
- PROPOSED OVERHEAD STRUCTURE
- EXISTING SIGN
- EXISTING SIGN AND SUPPORT TO BE REMOVED
- PROPOSED SIGN

RK&K
81 MOSHER STREET | BALTIMORE, MD 21217
PH: (410) 728-2900 FAX: (410) 728-3160
Engineers Construction Managers Planners Scientists
www.rkk.com

MARYLAND TRANSPORTATION AUTHORITY
Engineering Division

ADDENDUMS & REVISIONS

NO.	DESCRIPTION	BY	DATE

I-95 FROM MORAVIA ROAD TO THE FORT McHENRY TUNNEL - PHASE 1 - SOUTHBOUND

I-95 (BALTIMORE CITY)

SIGNING AND PAVEMENT MARKING PLAN

DESIGNED BY MLH	DRAWN BY MLH	CHECKED BY BLB	
CONST. REVIEW BY	DATE DECEMBER 2009	SCALE AS SHOWN	

CONTRACT NO. FT 928-000-006

DRAWING NO. SN-2.4

SHEET NO. 167 OF 188

PAVEMENT MARKING LEGEND

Ⓐ FURNISH AND INSTALL 5 IN. WHITE PERMANENT PREFORMED PATTERNED REFLECTIVE PAVEMENT MARKINGS
Ⓑ FURNISH AND INSTALL 5 IN. WHITE SKIP PERMANENT PREFORMED PATTERNED REFLECTIVE PAVEMENT MARKING (10 FT. LINE 30 FT. GAP)
Ⓒ FURNISH AND INSTALL 5 IN. YELLOW PERMANENT PREFORMED PATTERNED REFLECTIVE PAVEMENT MARKINGS
Ⓓ FURNISH AND INSTALL 10 IN. WHITE PERMANENT PREFORMED PATTERNED REFLECTIVE PAVEMENT MARKINGS
Ⓔ FURNISH AND INSTALL 10 IN. WHITE SKIP PERMANENT PREFORMED PATTERNED REFLECTIVE PAVEMENT MARKINGS (3 FT. LINE 9 FT. GAP).
Ⓕ FURNISH AND INSTALL 16 IN. WHITE PERMANENT PREFORMED PATTERNED REFLECTIVE PAVEMENT MARKINGS (SEE PAVEMENT MARKING GENERAL NOTE 1 FOR DETAILS)
Ⓖ FURNISH AND INSTALL PLOWABLE RAISED PAVEMENT MARKERS (SEE PAVEMENT MARKING GENERAL NOTE 2 FOR DETAILS)
Ⓗ FURNISH AND INSTALL 5 IN. WHITE SKIP PERMANENT PREFORMED PATTERNED REFLECTIVE CONTRAST PAVEMENT MARKING (10 FT. LINE 30 FT. GAP)
Ⓙ FURNISH AND INSTALL 10 IN. WHITE SKIP PERMANENT PREFORMED PATTERNED REFLECTIVE CONTRAST PAVEMENT MARKINGS (3 FT. LINE 9 FT. GAP).
Ⓚ FURNISH AND INSTALL 5 IN. YELLOW PERMANENT PREFORMED PATTERNED REFLECTIVE CONTRAST PAVEMENT MARKINGS.
Ⓛ FURNISH AND INSTALL 5 IN. WHITE PERMANENT PREFORMED PATTERNED REFLECTIVE CONTRAST PAVEMENT MARKINGS.
Ⓜ FURNISH AND INSTALL 10 IN. WHITE PERMANENT PREFORMED PATTERNED REFLECTIVE CONTRAST PAVEMENT MARKINGS.

SIGNING GENERAL NOTES

1. PROPOSED SIGN TO BE BANDED TO FENCE POST USING MDSHA STANDARD NO. MD 813.08.

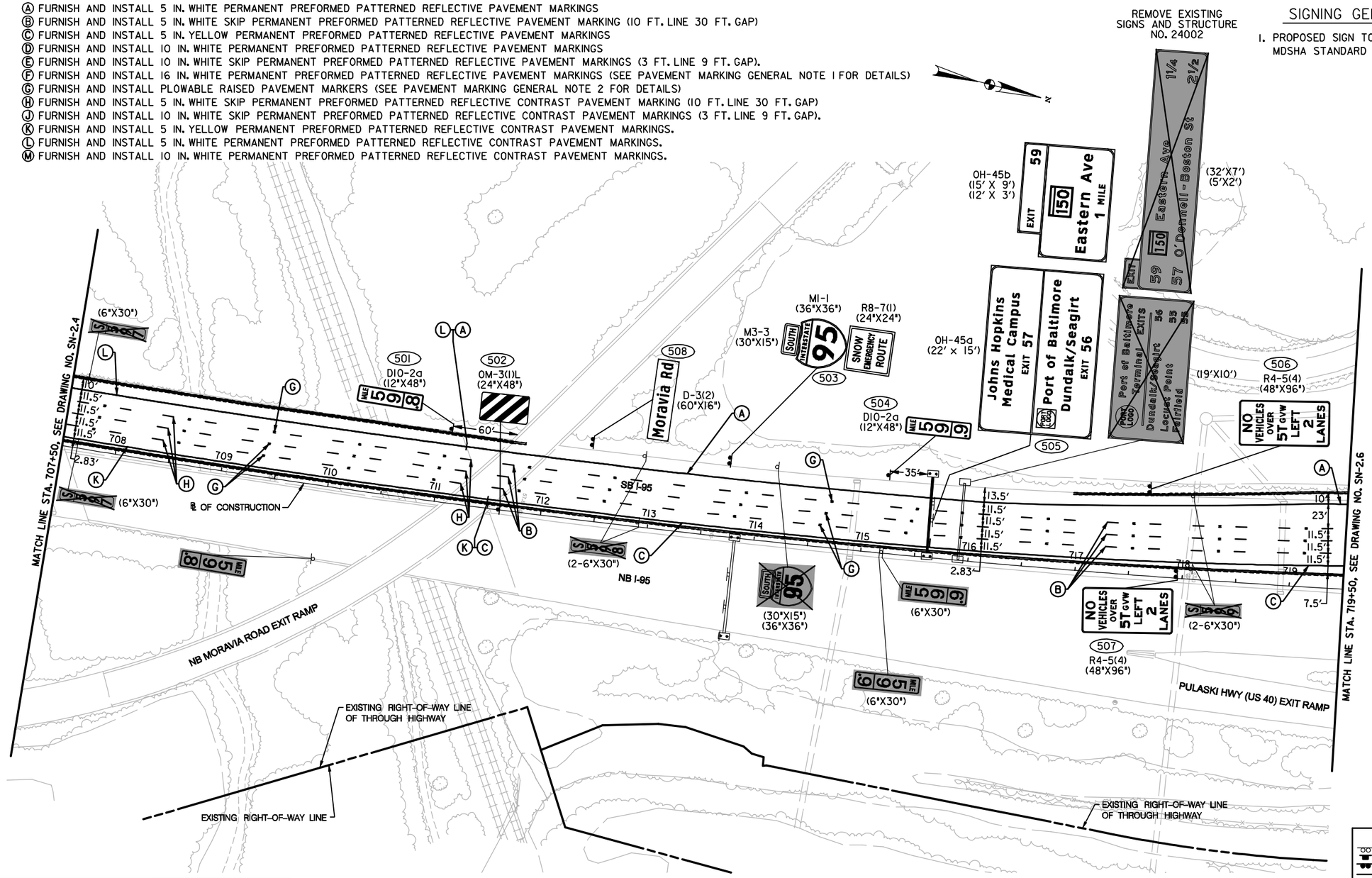

SIGN LIGHTING SCHEDULE					
STRUCTURE NUMBER	NO. OF LUMINAIRES	WATTAGE	OPERATING VOLTAGE	SPACE (FEET)	REMARKS
OH-45a	6N	150	277V	1.83/3.67/3.67/ 3.66/3.67/3.67/1.83	ICELS-NARROW DISTRIBUTION
OH-45b	4N	150	277V	1.875/3.75/3.75/ 3.75/1.875	ICELS-NARROW DISTRIBUTION

SCALE IN FEET
50 0 50 100

PAVEMENT MARKING GENERAL NOTES

1. USE THE MD MUTCD STANDARD FIGURE 3B-9e DIMENSIONS WHEN INSTALLING HATCHING IN GORE AREAS.
2. USE THE MD MUTCD STANDARD FIGURE 3B-10 DIMENSIONS WHEN INSTALLING RAISED PAVEMENT MARKERS.
3. CONTRACTOR SHALL NOT PLACE FINAL PAVEMENT MARKINGS ON INLETS OR SCUPPER GRATES.

LEGEND

- EXISTING GROUND MOUNTED SUPPORT AND SIGN
- PROPOSED BRIDGE MOUNTED SUPPORT AND SIGN
- PROPOSED GROUND MOUNTED SUPPORT AND SIGN
- PROPOSED FENCE MOUNTED SUPPORT AND SIGN
- EXISTING CANTILEVER STRUCTURE
- EXISTING OVERHEAD STRUCTURE
- PROPOSED CANTILEVER STRUCTURE
- PROPOSED OVERHEAD STRUCTURE
- EXISTING SIGN
- EXISTING SIGN AND SUPPORT TO BE REMOVED
- PROPOSED SIGN

RK&K
81 MOSHER STREET | BALTIMORE, MD 21217
PH: (410) 728-2900 FAX: (410) 728-2160
Engineers Construction Managers Planners Scientists
www.rkk.com

MARYLAND TRANSPORTATION AUTHORITY
Engineering Division

ADDENDUMS & REVISIONS			
NO.	DESCRIPTION	BY	DATE

I-95 FROM MORAVIA ROAD TO THE FORT McHENRY TUNNEL - PHASE 1 - SOUTHBOUND

I-95 (BALTIMORE CITY)

SIGNING AND PAVEMENT MARKING

DESIGNED BY MLH	DRAWN BY MLH	CHECKED BY BLB	
CONST. REVIEW BY	DATE DECEMBER 2009	SCALE AS SHOWN	

CONTRACT NO. FT 928-000-006
DRAWING NO. SN-2.5
SHEET NO. 168 OF 188

PAVEMENT MARKING LEGEND

Ⓐ FURNISH AND INSTALL 5 IN. WHITE PERMANENT PREFORMED PATTERNED REFLECTIVE PAVEMENT MARKINGS
Ⓑ FURNISH AND INSTALL 5 IN. WHITE SKIP PERMANENT PREFORMED PATTERNED REFLECTIVE PAVEMENT MARKING (10 FT. LINE 30 FT. GAP)
Ⓒ FURNISH AND INSTALL 5 IN. YELLOW PERMANENT PREFORMED PATTERNED REFLECTIVE PAVEMENT MARKINGS
Ⓓ FURNISH AND INSTALL 10 IN. WHITE PERMANENT PREFORMED PATTERNED REFLECTIVE PAVEMENT MARKINGS
Ⓔ FURNISH AND INSTALL 10 IN. WHITE SKIP PERMANENT PREFORMED PATTERNED REFLECTIVE PAVEMENT MARKINGS (3 FT. LINE 9 FT. GAP).
Ⓕ FURNISH AND INSTALL 16 IN. WHITE PERMANENT PREFORMED PATTERNED REFLECTIVE PAVEMENT MARKINGS (SEE PAVEMENT MARKING GENERAL NOTE 1 FOR DETAILS)
Ⓖ FURNISH AND INSTALL PLOWABLE RAISED PAVEMENT MARKERS (SEE PAVEMENT MARKING GENERAL NOTE 2 FOR DETAILS)
Ⓗ FURNISH AND INSTALL 5 IN. WHITE SKIP PERMANENT PREFORMED PATTERNED REFLECTIVE CONTRAST PAVEMENT MARKING (10 FT. LINE 30 FT. GAP)
Ⓙ FURNISH AND INSTALL 10 IN. WHITE SKIP PERMANENT PREFORMED PATTERNED REFLECTIVE CONTRAST PAVEMENT MARKINGS (3 FT. LINE 9 FT. GAP).
Ⓚ FURNISH AND INSTALL 5 IN. YELLOW PERMANENT PREFORMED PATTERNED REFLECTIVE CONTRAST PAVEMENT MARKINGS.
Ⓛ FURNISH AND INSTALL 5 IN. WHITE PERMANENT PREFORMED PATTERNED REFLECTIVE CONTRAST PAVEMENT MARKINGS.
Ⓜ FURNISH AND INSTALL 10 IN. WHITE PERMANENT PREFORMED PATTERNED REFLECTIVE CONTRAST PAVEMENT MARKINGS.

PAVEMENT MARKING GENERAL NOTES

1. USE THE MD MUTCD STANDARD FIGURE 3B-9e DIMENSIONS WHEN INSTALLING HATCHING IN GORE AREAS.
2. USE THE MD MUTCD STANDARD FIGURE 3B-10 DIMENSIONS WHEN INSTALLING RAISED PAVEMENT MARKERS.
3. CONTRACTOR SHALL NOT PLACE FINAL PAVEMENT MARKINGS ON INLETS OR SCUPPER GRATES.

SIGNING GENERAL NOTE

1. PROPOSED SIGN TO BE BANDED TO FENCE POST USING MDSHA STANDARD NO. MD 813.08.

NOTE:
CONTRACTOR SHALL COORDINATE PLACEMENT OF FINAL PAVEMENT MARKINGS WITH THE KH-1502-000-006 CONTRACTOR TO ENSURE CONTINUITY OF MARKINGS BETWEEN THE TWO PROJECTS.

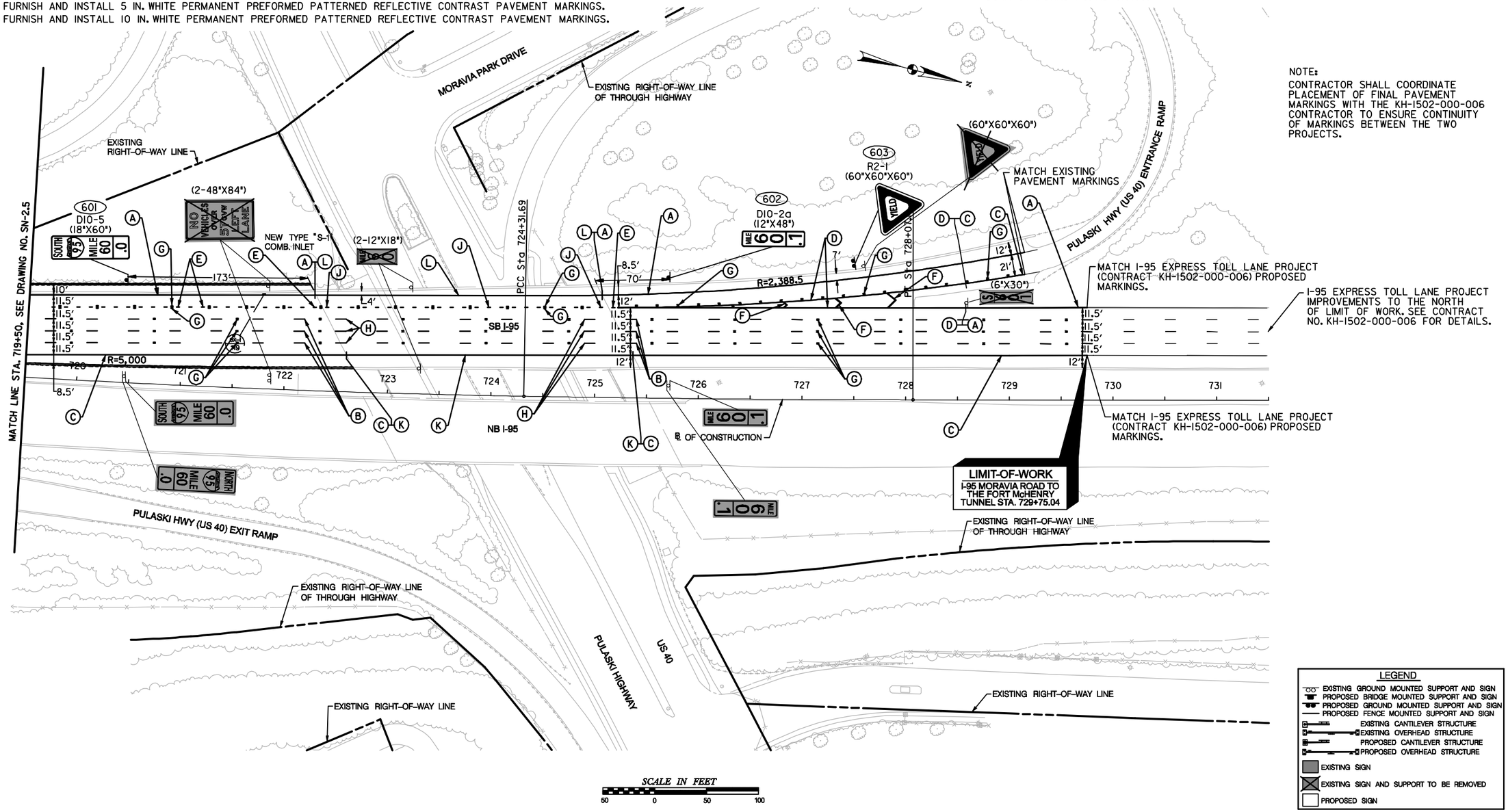

LEGEND

- EXISTING GROUND MOUNTED SUPPORT AND SIGN
- PROPOSED BRIDGE MOUNTED SUPPORT AND SIGN
- PROPOSED GROUND MOUNTED SUPPORT AND SIGN
- PROPOSED FENCE MOUNTED SUPPORT AND SIGN
- EXISTING CANTILEVER STRUCTURE
- EXISTING OVERHEAD STRUCTURE
- PROPOSED CANTILEVER STRUCTURE
- PROPOSED OVERHEAD STRUCTURE
- EXISTING SIGN
- EXISTING SIGN AND SUPPORT TO BE REMOVED
- PROPOSED SIGN

RK&K
81 MOSHER STREET | BALTIMORE, MD 21217
PH: (410) 728-2900 FAX: (410) 728-5160
Engineers Construction Managers Planners Scientists
www.rkk.com

MARYLAND TRANSPORTATION AUTHORITY
Engineering Division

ADDENDUMS & REVISIONS

NO.	DESCRIPTION	BY	DATE

I-95 FROM MORAVIA ROAD TO THE FORT McHENRY TUNNEL - PHASE 1 - SOUTHBOUND

I-95 (BALTIMORE CITY)

SIGNING AND PAVEMENT MARKING PLAN

DESIGNED BY MLH	DRAWN BY MLH	CHECKED BY BLB	
CONST. REVIEW BY	DATE DECEMBER 2009	SCALE AS SHOWN	

CONTRACT NO. FT 928-000-006
DRAWING NO. SN-2.6
SHEET NO. 169 OF 188

PANEL DESIGNATION	SHEET NO.	QUANTITY	LEGEND	SIZE			COLOR			BORDER		ARROW	SHIELD	REMARKS
				AREA (S.F.)	WIDTH	HEIGHT	LEGEND	BORDER	BCKGRND	WIDTH	RADIUS			
C-48	SN-2.1	1	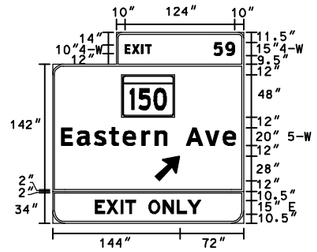	36	12′	3′	W	W	GR	2″	6″	–	–	EXTRUDED ALUMINUM
				216	18′	12′	W	W	GR	2″	12″	A-3 @ 45°	M1-5(1) 60″X48″	
				54	18′	3′	BLK	BLK	FY	2″	12″	–	–	
OH-52b	SN-2.3	1	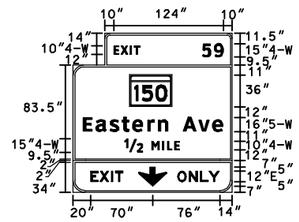	36	12′	3′	W	W	GR	2″	6″	–	–	EXTRUDED ALUMINUM
				135	15′	9′	W	W	GR	2″	12″	C-1	M1-5(1) 48″X36″	
				45	15′	3′	BLK	BLK	FY	2″	12″	–	–	
OH-45a	SN-2.5	1	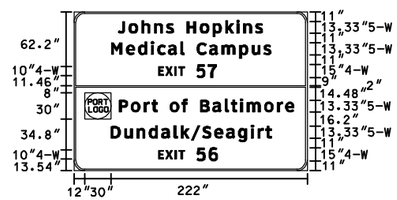	330	22′	15′	W	W	GR	2″	12″	–	–	EXTRUDED ALUMINUM AN ELECTRONIC COPY OF THE LOGO DETAIL WILL BE PROVIDED.
OH-45b	SN-2.5	1	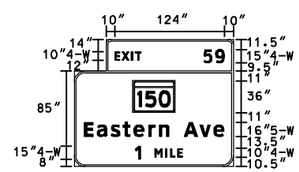	36	12′	3′	W	W	GR	2″	6″	–	–	EXTRUDED ALUMINUM
				135	15′	9′	W	W	GR	2″	12″	–	M1-5(1) 48″X36″	

NOTES: 1. COLORS: BLK=BLACK, BLU=BLUE, BRO=BROWN, G=GREEN, W=WHITE/SILVER, Y=YELLOW, R=RED, FYG=FLUORESCENT YELLOW/GREEN, FY=FLUORESCENT YELLOW, PUR=PURPLE (PANTONE 259 C)

RK&K
81 MOSHER STREET | BALTIMORE, MD 21217
PH: (410) 728-2900 FAX: (410) 728-2160
Engineers Construction Managers Planners Scientists
www.rkk.com

MARYLAND TRANSPORTATION AUTHORITY
Engineering Division

ADDENDUMS & REVISIONS

NO.	DESCRIPTION	BY	DATE

I-95 FROM MORAVIA ROAD TO THE FORT McHENRY TUNNEL - PHASE 1 - SOUTHBOUND
I-95 (BALTIMORE CITY)
GUIDE SIGN DETAILS AND DIMENSIONS

DESIGNED BY MLH	DRAWN BY MLH	CHECKED BY BLB	
CONST. REVIEW BY	DATE DECEMBER 2009	SCALE AS SHOWN	

CONTRACT NO. FT 928-000-006
DRAWING NO. SN-3.1
SHEET NO. 170 OF 188

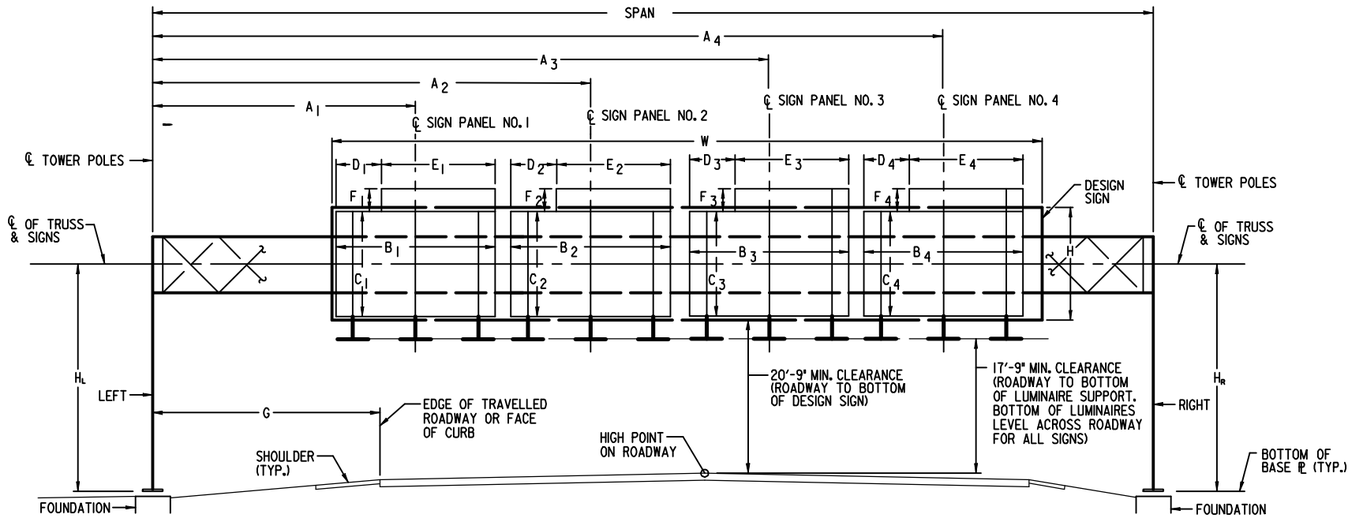

ELEVATION OF OVERHEAD SIGN STRUCTURE
DIRECTION OF TRAFFIC

GENERAL NOTES:

1. REFER TO CONTRACT PROPOSAL AND MD. STANDARD SPECIFICATIONS FOR CONSTRUCTION AND MATERIALS FOR MATERIAL, CONSTRUCTION SPECIFICATIONS AND DETAILS.
2. REFER TO SIGNING PLAN SN-2.5 FOR LIGHTING CHART.
3. ANY ALTERNATE DESIGN SHALL BE STRUCTURALLY EQUIVALENT AND SUBJECT TO APPROVAL BY THE ENGINEER.
4. ALL ALTERNATE DESIGNS MUST BE SIMILAR TO THE DESIGN SHOWN ON THE PLANS.
5. ALTERNATE DESIGNS MAY BE REJECTED BY THE ENGINEER FOR ANY REASON, INCLUDING REASONS NOT RELATED TO STRUCTURAL EQUIVALENCY.
6. ACTUAL STRUCTURE HEIGHT "H" SHALL NOT BE LESS THAN 20'-9" + 1/2 x DESIGN SIGN HEIGHT + ELEVATION DIFFERENCE BETWEEN HIGH POINT OF ROADWAY AND TOP OF FOUNDATION.
7. ALL SIGN SUPPORTS SHALL BE LOCATED BEHIND PHYSICAL TRAFFIC BARRIERS.
8. ALL ANCHOR BOLTS SHALL MEET THE REQUIREMENTS OF F1554, GRADE 55 SI.
9. STEEL TEMPLATES SHALL BE USED TO SET ANCHOR BOLTS PLUMB WHEN POURING THE FOUNDATION.
10. ALL ANCHOR BOLTS SHALL BE PLUMB AFTER FOUNDATION INSTALLATION.
11. ALL CONNECTION BOLTS SHALL MEET THE REQUIREMENTS OF ASTM A325 (BOLTS OVER 1 1/2 " DIA. ASTM A449), WASHERS F436 AND NUTS A194 GRADE 2 OR 2H. THE BOLTS SHALL HAVE A FLAT WASHER UNDER THE ELEMENT TO BE TURNED.
12. USE LOCK NUTS AND FLAT WASHERS FOR ALL "U" BOLTS (A307 OR EQUIVALENT).
13. BASE PLATE SHALL BE IN FULL CONTACT WITH ALL FLAT WASHERS.
14. GROUT SHALL NOT BE PLACED BETWEEN THE BASE PLATE AND CONCRETE TOP.
15. FOR ALL STRUCTURAL DETAILS, SINGLE SPAN LENGTHS UP TO 140 FEET, SEE STANDARDS NO. MD-803.04 THRU. MD-803.08-23.

OVERHEAD SIGN STRUCTURE

SIGN STRUCTURE NO.	STRUCTURE MARK	SPAN	SIGN PANEL LOCATIONS																								TOWER DIMENSION			DESIGN SIGN SIZE	FOUNDATION			C.Y. CONC.	LOCATION	REMARKS
			PANEL NO. 1						PANEL NO. 2						PANEL NO. 3						PANEL NO. 4										MARK	FOOTING TYPE				
			A_1	B_1	C_1	D_1	E_1	F_1	A_2	B_2	C_2	D_2	E_2	F_2	A_3	B_3	C_3	D_3	E_3	F_3	A_4	B_4	C_4	D_4	E_4	F_4	H_L	H_R	G	W x H		LEFT TOWER	RIGHT TOWER			
OH-45	OH-75-30B	73'-0"	26'-0"	22'-0"	15'-0"	-	-	-	46'-6"	15'-0"	9'-0"	3'-0"	12'-0"	3'-0"	-	-	-	-	-	-	-	-	-	-	-	-	28'-1"	28'-6"	5'-8"	56'-3" (W) x 16'-0" (H) *	OF-624	A	A	67.4	STA. 715+62 S.B. I-95	

* +12'(W) x 3'(H) EXIT PANEL

WHITMAN, REQUARDT & ASSOCIATES, LLP
801 South Caroline Street, Baltimore, Maryland 21231

MARYLAND TRANSPORTATION AUTHORITY
Engineering Division

ADDENDUMS & REVISIONS			
NO.	DESCRIPTION	BY	DATE

I-95 FROM MORAVIA ROAD TO THE FORT McHENRY TUNNEL - PHASE 1 - SOUTHBOUND
I-95 (BALTIMORE CITY)
OVERHEAD SIGN STRUCTURE

CONTRACT NO. FT 928-000-006
DRAWING NO. SN-8

DESIGNED BY J. MOCNY | DRAWN BY J. RASMUSSEN | CHECKED BY N.LEARY
CONST. REVIEW BY _____ | DATE DECEMBER 2009 | SCALE NONE
SHEET NO. 171 OF 188

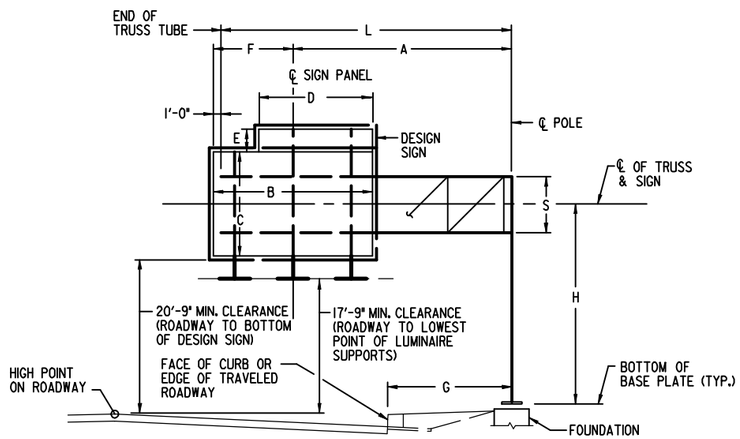

ELEVATION OF CANTILEVER SIGN SUPPORT – SINGLE PANEL
DIRECTION OF TRAFFIC

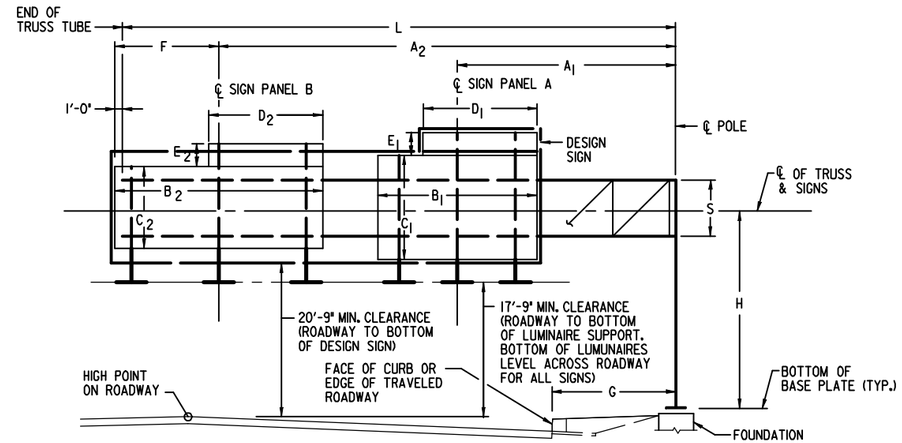

ELEVATION OF CANTILEVER SIGN SUPPORT – DOUBLE PANEL
DIRECTION OF TRAFFIC

GENERAL NOTES:

1. REFER TO CONTRACT PROPOSAL AND MD. STANDARD SPECIFICATIONS FOR CONSTRUCTION AND MATERIALS FOR MATERIAL, CONSTRUCTION SPECIFICATIONS AND DETAILS.
2. REFER TO SIGNING PLAN SN-2.1 FOR LIGHTING CHART.
3. ANY ALTERNATE DESIGN SHALL BE STRUCTURALLY EQUIVALENT AND SUBJECT TO APPROVAL BY THE ENGINEER.
4. ALL ALTERNATE DESIGNS MUST BE SIMILAR TO THE DESIGN SHOWN ON THE PLANS.
5. ALTERNATE DESIGNS MAY BE REJECTED BY THE ENGINEER FOR ANY REASON, INCLUDING REASONS NOT RELATED TO STRUCTURAL EQUIVALENCY.
6. ACTUAL STRUCTURE HEIGHT "H" SHALL NOT BE LESS THAN 20'-9" + 1/2 × DESIGN SIGN HEIGHT + ELEVATION DIFFERENCE BETWEEN HIGH POINT OF ROADWAY AND TOP OF FOUNDATION.
7. ALL SIGN STRUCTURE SUPPORTS SHALL BE LOCATED BEHIND PHYSICAL TRAFFIC BARRIERS.
8. ALL ANCHOR BOLTS SHALL MEET THE REQUIREMENTS OF F1554, GRADE 55 S1.
9. STEEL TEMPLATES SHALL BE USED TO SET ANCHOR BOLTS PLUMB WHEN POURING THE FOUNDATION.
10. ALL ANCHOR BOLTS SHALL BE PLUMB AFTER FOUNDATION INSTALLATION.
11. ALL CONNECTION BOLTS SHALL MEET THE REQUIREMENTS OF ASTM A325 (BOLTS OVER 1 1/2 " DIA. ASTM A449), WASHERS F436 AND NUTS A194 GRADE 2 OR 2H. THE BOLTS SHALL HAVE A FLAT WASHER UNDER THE ELEMENT TO BE TURNED.
12. USE LOCK NUTS AND FLAT WASHERS FOR ALL "U" BOLTS (A307 OR EQUIVALENT).
13. BASE PLATE SHALL BE IN FULL CONTACT WITH ALL FLAT WASHERS.
14. GROUT SHALL NOT BE PLACED BETWEEN THE BASE PLATE AND CONCRETE TOP.
15. FOR ALL STRUCTURAL DETAILS, SEE STANDARDS NO. MD-803.04 THRU. MD-803.08-23.

CANTILEVER SIGN SUPPORT – SINGLE PANEL

SIGN STRUCTURE NO.	STRUCTURE MARK	STRUCTURE DIMENSIONS			SIGN PANEL							DESIGN SIGN SIZE W x H	FOUNDATION			LOCATION
		H	S	L	A	B	C	D	E	F	G**		MARK	TYPE	C.Y. CONC.	
C-48	C-35-30-E	29'-3"	4'-0"	31'-6"	23'-6"	18'-0"	15'-0"	12'-0"	3'-0"	9'-0"	8'-0"	26'(W) x 16'(H) +*	CF-20	A	14.4	STA. 663+00 S.B. I-95

* 12'(W) x 3'(H) EXIT PANEL
** 'G' DIMENSION FROM EDGE OF TRAVEL LANE/FACE OF CURB TO CENTER LINE OF COLUMN

WHITMAN, REQUARDT & ASSOCIATES, LLP
801 South Caroline Street, Baltimore, Maryland 21231

MARYLAND TRANSPORTATION AUTHORITY
Engineering Division

ADDENDUMS & REVISIONS

NO.	DESCRIPTION	BY	DATE

I-95 FROM MORAVIA ROAD TO THE FORT McHENRY TUNNEL - PHASE 1 - SOUTHBOUND
I-95 (BALTIMORE CITY)
CANTILEVER SIGN STRUCTURE

CONTRACT NO. FT 928-000-006
DRAWING NO. SN-9

DESIGNED BY J. MOCNY | DRAWN BY J. RASMUSSEN | CHECKED BY N.LEARY
CONST. REVIEW BY | DATE DECEMBER 2009 | SCALE NONE

SHEET NO.	SIGN NO.	REMARKS	CODE NUMBERS * 1	2	3	4	5	6	7	8	9	10	11	12	13	14	15	16	17	18	19	20	21	22	23	24	25	26	27	28	29	30	31	32	33	34
SN-2.1	-	RAISED PAVEMENT MARKERS	126	110	-	-	-	-	-	-	-	-	-	-	-	-	-	-	-	-	-	-	-	-	-	-	-	-	-	-	-	-	-	-	-	-
	-	PAVEMENT MARKINGS	-	-	4688	1908	-	1348	-	1090	-	225	-	-	-	-	-	-	-	-	-	-	-	-	-	-	-	-	-	-	-	-	-	-	-	-
	-	REMOVAL OF SIGNS	-	-	-	-	-	-	-	-	-	-	-	-	-	-	-	-	154	-	-	-	-	-	-	-	-	-	-	-	-	-	-	-	-	-
	101	GM-1 E5-1(9) (45 degree arrow) (84"X84") ONE (1) W14X30 GALVANIZED STEEL BEAM	-	-	-	-	-	-	-	-	-	-	2.9	-	-	-	-	49	-	-	-	-	-	-	-	1	-	-	-	17	-	-	-	-	-	-
	102	OM-1(1) (18"X18") SQUARE PERFORATED STEEL POST WITH ANCHOR BASE	-	-	-	-	-	-	-	-	-	-	-	-	1	1	2.25	-	-	-	-	-	-	-	-	-	-	-	-	-	-	-	-	-	-	-
	103	D10-2a (12"X48") SQUARE PERFORATED STEEL POST WITH ANCHOR BASE	-	-	-	-	-	-	-	-	-	-	-	-	1	1	4	-	-	-	-	-	-	-	-	-	-	-	-	-	-	-	-	-	-	-
	104	OM-3(1)R (24"X48") SQUARE PERFORATED STEEL POST WITH ANCHOR BASE	-	-	-	-	-	-	-	-	-	-	-	-	1	1	8	-	-	-	-	-	-	-	-	-	-	-	-	-	-	-	-	-	-	-
	105	OM-3(1)L (24"X48") SQUARE PERFORATED STEEL POST WITH ANCHOR BASE	-	-	-	-	-	-	-	-	-	-	-	-	1	1	8	-	-	-	-	-	-	-	-	-	-	-	-	-	-	-	-	-	-	-
	106	D10-2a (12"X48") SQUARE PERFORATED STEEL POST WITH ANCHOR BASE	-	-	-	-	-	-	-	-	-	-	-	-	1	1	4	-	-	-	-	-	-	-	-	-	-	-	-	-	-	-	-	-	-	-
	107	C-48 (18'X15') & (12'X3'), W13-2 (48"X60") BLK/FY INSTALL ON NEW CANTILEVER SIGN STRUCTURE	-	-	-	-	-	-	-	-	-	-	14.4	-	-	-	20	306	-	-	-	-	-	1	-	-	624	114	13	-	1	-	-	5	-	-
	108	D10-5 (18"X60") SQUARE PERFORATED STEEL POST WITH ANCHOR BASE	-	-	-	-	-	-	-	-	-	-	-	-	1	1	7.5	-	-	-	-	-	-	-	-	-	-	-	-	-	-	-	-	-	-	-
	109	R4-5(4) (48"X96") TWO (2) 6"X6" WOOD SIGN SUPPORTS	-	-	-	-	-	-	-	-	-	-	-	-	-	-	32	-	-	-	-	39	-	-	-	-	-	-	-	-	-	-	-	-	-	-
	110	R4-5(4) (48"X96") TWO (2) 6"X6" WOOD SIGN SUPPORTS	-	-	-	-	-	-	-	-	-	-	-	-	-	-	32	-	-	-	-	37	-	-	-	-	-	-	-	-	-	-	-	-	-	-
	-	REMOVE EXISTING SIGNS AND CANTILEVER STRUCTURE	-	-	-	-	-	-	-	-	-	-	-	-	-	-	-	-	-	1	-	-	-	-	-	-	-	-	-	-	-	-	-	-	-	-
SN-2.2	-	RAISED PAVEMENT MARKERS	120	48	-	-	-	-	-	-	-	-	-	-	-	-	-	-	-	-	-	-	-	-	-	-	-	-	-	-	-	-	-	-	-	-
	-	PAVEMENT MARKINGS	-	-	3575	98	2203	10	313	85	1220	-	-	-	-	-	-	-	-	-	-	-	-	-	-	-	-	-	-	-	-	-	-	-	-	-
	-	REMOVAL OF SIGNS	-	-	-	-	-	-	-	-	-	-	-	-	-	-	-	-	6.5	-	-	-	-	-	-	-	-	-	-	-	-	-	-	-	-	-
	201	D10-2a (12"X48") BAND TO FENCE	-	-	-	-	-	-	-	-	-	-	-	-	-	-	4	-	-	-	-	-	-	1	-	-	-	-	-	-	-	-	-	-	-	-
	202	BM-1 W3-3 (30"X15"), M1-1 (36"X36"), R8-7(1) (24"X24") SPECIAL BRIDGE MOUNTED SUPPORT TYPE - IF	-	-	-	-	-	-	-	-	-	-	-	-	-	-	16.125	-	-	-	-	-	-	-	-	-	-	-	-	-	-	-	-	-	-	1
	203	BM-2 R2-1 (48"X60") SPECIAL BRIDGE MOUNTED SUPPORT TYPE - IJ	-	-	-	-	-	-	-	-	-	-	-	-	-	-	20	-	-	-	-	-	-	-	-	-	-	-	-	-	-	-	-	-	-	1
	204	BM-3 R2-1 (48"X60") SPECIAL BRIDGE MOUNTED SUPPORT TYPE - IK	-	-	-	-	-	-	-	-	-	-	-	-	-	-	20	-	-	-	-	-	-	-	-	-	-	-	-	-	-	-	-	-	-	1
	205	D10-2a (12"X48") BAND TO FENCE	-	-	-	-	-	-	-	-	-	-	-	-	-	-	4	-	-	-	-	-	-	1	-	-	-	-	-	-	-	-	-	-	-	-
	-	REMOVE EXISTING OVERHEAD SIGNS AND STRUCTURE	-	-	-	-	-	-	-	-	-	-	-	-	-	-	-	-	-	-	1	-	-	-	-	-	-	-	-	-	-	-	-	-	-	-
SN-2.3	-	RAISED PAVEMENT MARKERS	97	30	-	-	-	-	-	-	-	-	-	-	-	-	-	-	-	-	-	-	-	-	-	-	-	-	-	-	-	-	-	-	-	-
	-	PAVEMENT MARKINGS	-	-	4280	-	1900	-	1175	-	1200	114	-	-	-	-	-	-	-	-	-	-	-	-	-	-	-	-	-	-	-	-	-	-	-	-
	-	REMOVAL OF SIGNS	-	-	-	-	-	-	-	-	-	-	-	-	-	-	-	-	5	-	-	-	-	-	-	-	-	-	-	-	-	-	-	-	-	-
	301	D10-2a (12"X48") BAND TO FENCE	-	-	-	-	-	-	-	-	-	-	-	-	-	-	4	-	-	-	-	-	-	1	-	-	-	-	-	-	-	-	-	-	-	-
	302	OH-52a FT-04 (16'X15'), OH-52b (15'X12') & (12'X3') D9-2 (30"X30")																																		
		E5-1 (MOD) (60"X48") INSTALL ON NEW OVERHEAD SIGN STRUCTURE	-	-	-	-	-	-	-	-	-	-	-	-	-	-	26.25	456	-	-	-	-	-	2	-	-	1112	228	23	-	-	1	-	10	-	-
	303	D10-2a (12"X48") BAND TO FENCE	-	-	-	-	-	-	-	-	-	-	-	-	-	-	4	-	-	-	-	-	-	1	-	-	-	-	-	-	-	-	-	-	-	-
	304	D10-2a (12"X48") BAND TO FENCE	-	-	-	-	-	-	-	-	-	-	-	-	-	-	4	-	-	-	-	-	-	1	-	-	-	-	-	-	-	-	-	-	-	-
	-	REMOVE EXISTING OVERHEAD SIGNS AND STRUCTURE	-	-	-	-	-	-	-	-	-	-	-	-	-	-	-	-	-	-	1	-	-	-	-	-	-	-	-	-	-	-	-	-	-	-
SN-2.4	-	RAISED PAVEMENT MARKERS	48	32	-	-	-	-	-	-	-	-	-	-	-	-	-	-	-	-	-	-	-	-	-	-	-	-	-	-	-	-	-	-	-	-
	-	PAVEMENT MARKINGS	-	-	3250	805	1435	-	-	495	800	-	-	-	-	-	-	-	-	-	-	-	-	-	-	-	-	-	-	-	-	-	-	-	-	-
	-	REMOVAL OF SIGNS	-	-	-	-	-	-	-	-	-	-	-	-	-	-	-	-	5	-	-	-	-	-	-	-	-	-	-	-	-	-	-	-	1	-
	401	BM-4 W4-3(R) (48"X48") SPECIAL BRIDGE MOUNTED SUPPORT TYPE - IIE	-	-	-	-	-	-	-	-	-	-	-	-	-	-	16	-	-	-	-	-	-	-	-	-	-	-	-	-	-	-	-	-	-	1
	402	BM-5 W4-3(R) (48"X48") SPECIAL BRIDGE MOUNTED SUPPORT TYPE - IIE	-	-	-	-	-	-	-	-	-	-	-	-	-	-	16	-	-	-	-	-	-	-	-	-	-	-	-	-	-	-	-	-	-	1
	403	D10-2a (12"X48") BAND TO FENCE	-	-	-	-	-	-	-	-	-	-	-	-	-	-	4	-	-	-	-	-	-	1	-	-	-	-	-	-	-	-	-	-	-	-
	404	D10-2a (12"X48") SQUARE PERFORATED STEEL POST WITH ANCHOR BASE	-	-	-	-	-	-	-	-	-	-	-	-	1	1	4	-	-	-	-	-	-	-	-	-	-	-	-	-	-	-	-	-	-	-
	405	R2-1 (48"X60") TWO (2) 4"X6" WOOD SIGN SUPPORTS	-	-	-	-	-	-	-	-	-	-	-	29	-	-	20	-	-	-	-	-	-	-	-	-	-	-	-	-	-	-	-	-	-	-
	406	R2-1 (48"X60") TWO (2) 4"X6" WOOD SIGN SUPPORTS	-	-	-	-	-	-	-	-	-	-	-	30	-	-	20	-	-	-	-	-	-	-	-	-	-	-	-	-	-	-	-	-	-	-
SN-2.5	-	RAISED PAVEMENT MARKERS	45	30	-	-	-	-	-	-	-	-	-	-	-	-	-	-	-	-	-	-	-	-	-	-	-	-	-	-	-	-	-	-	-	-
	-	PAVEMENT MARKINGS	-	-	3000	1488	647	-	-	805	395	-	-	-	-	-	-	-	-	-	-	-	-	-	-	-	-	-	-	-	-	-	-	-	-	-
	-	REMOVAL OF SIGNS	-	-	-	-	-	-	-	-	-	-	-	-	-	-	-	-	19.625	-	-	-	-	-	-	-	-	-	-	-	-	-	-	-	-	-
	501	D10-2a (12"X48") SQUARE PERFORATED STEEL POST WITH ANCHOR BASE	-	-	-	-	-	-	-	-	-	-	-	-	1	1	4	-	-	-	-	-	-	-	-	-	-	-	-	-	-	-	-	-	-	-
	502	OM-3(1)L (24'X48") SQUARE PERFORATED STEEL POST WITH ANCHOR BASE	-	-	-	-	-	-	-	-	-	-	-	-	1	1	8	-	-	-	-	-	-	-	-	-	-	-	-	-	-	-	-	-	-	-
	503	W3-3 (30"X15"), M1-1 (48"X48"), R8-7(1) (24"X24") SQUARE PERFORATED STEEL POST WITH ANCHOR BASE	-	-	-	-	-	-	-	-	-	-	-	-	2	2	16.125	-	-	-	-	-	-	-	-	-	-	-	-	-	-	-	-	-	-	-
	504	D10-2a (12"X48") SQUARE PERFORATED STEEL POST WITH ANCHOR BASE	-	-	-	-	-	-	-	-	-	-	-	-	1	1	4	-	-	-	-	-	-	-	-	-	-	-	-	-	-	-	-	-	-	-
	505	OH-45a (22'X15'), OH-45b (15'X9') & (12'X3') INSTALL ON NEW OVERHEAD SIGN STRUCTURE	-	-	-	-	-	-	-	-	-	-	67.4	-	-	-	-	501	-	-	-	-	-	-	-	-	1092	222	23	-	-	-	1	10	-	-
	506	R4-5(4) (48"X96") TWO (2) 6"X6" WOOD SIGN SUPPORTS	-	-	-	-	-	-	-	-	-	-	-	-	-	-	32	-	-	-	-	-	50	-	-	-	-	-	-	-	-	-	-	-	-	-
	507	R4-5(4) (48"X96") TWO (2) 6"X6" WOOD SIGN SUPPORTS	-	-	-	-	-	-	-	-	-	-	-	-	-	-	32	-	-	-	-	37	-	-	-	-	-	-	-	-	-	-	-	-	-	-
	508	D-3(2) (60"X16") SQUARE PERFORATED STEEL POST WITH ANCHOR BASE	-	-	-	-	-	-	-	-	-	-	-	-	2	2	6.7	-	-	-	-	-	-	-	-	-	-	-	-	-	-	-	-	-	-	-
	-	REMOVE EXISTING OVERHEAD SIGNS AND STRUCTURE	-	-	-	-	-	-	-	-	-	-	-	-	-	-	-	-	-	-	1	-	-	-	-	-	-	-	-	-	-	-	-	-	-	-
		TOTALS THIS SHEET	436	250	18793	4299	6185	1358	1488	2475	3615	339	85	59	14	14	403	1312	190.5	1	3	113	50	9	-	1	2828	564	59	17	1	1	1	25	1	5

* CODE NUMBER DESCRIPTION & UNIT

CODE NUMBERS	DESCRIPTION	UNIT	CODE NUMBERS	DESCRIPTION	UNIT	CODE NUMBERS	DESCRIPTION	UNIT	CODE NUMBERS	DESCRIPTION	UNIT
1	SNOWPLOWABLE RAISED PAVEMENT MARKERS	EA	12	WOOD SIGN SUPPORT 4 INCH X 6 INCH	LF	23	NOT USED	SF	34	BRIDGE MOUNTED SIGN SUPPORT (SPECIAL)	EA
2	REMOVE SNOWPLOWABLE RAISED PAVEMENT MARKERS	EA	13	SQUARE PERFORATED TUBULAR STEEL SIGN POSTS	EA	24	INSTALL BREAKAWAY BASE SUPPORT SYSTEM FOR STEEL BEAM SIGN POST	EA			
3	REMOVE EXISTING PAVEMENT MARKINGS ANY WIDTH	LF	14	SQUARE TUBULAR STEEL ANCHOR BASES	EA	25	CABLE - 1 CONDUCTOR, NO. 10 AWG, TYPE THWN/THHN, 600V	LF			
4	5" WHITE PERM PATTERNED REFLECT PAVEMENT MARKINGS	LF	15	SHEET ALUMINUM SIGN	SF	26	1 INCH DIAMETER RIGID STEEL CONDUIT, SCHEDULE 40 FOR SIGN STRUCTURE	LF			
5	5" WHITE PERM PATTERNED REFLECT CONTRAST PAVEMENT MARKINGS	LF	16	EXTRUDED ALUMINUM SIGN	SF	27	1 INCH DIAMETER FLEXIBLE STEEL CONDUIT	LF			
6	10" WHITE PERM PATTERNED REFLECT PAVEMENT MARKINGS	LF	17	REMOVE EXISTING GROUND MOUNTED SIGNS AND SUPPORTS	SF	28	GALVANIZED STEEL BEAMS (W14X30)	LF			
7	10" WHITE PERM PATTERNED REFLECT CONTRAST PAVEMENT MARKINGS	LF	18	REMOVE EXISTING CANTILEVER STRUCTURE AND SIGNS AND SUPPORTS	EA	29	INSTALL CANTILEVER SIGN AND STRUCTURE C-48	EA			
8	5" YELLOW PERM PATTERNED REFLECT PAVEMENT MARKINGS	LF	19	REMOVE EXISTING OVERHEAD SIGN STRUCTURE AND SIGNS AND SUPPORTS	EA	30	INSTALL OVEREHEAD SIGN STRUCTURE OH-52	EA			
9	5" YELLOW PERM PATTERNED REFLECT CONTRAST PAVEMENT MARKINGS	LF	20	WOOD SIGN SUPPORT 6 INCH X 6 INCH	LF	31	INSTALL OVERHEAD SIGNS AND STRUCTURE OH-45	EA			
10	16" WHITE PERM PATTERNED REFLECT PAVEMENT MARKINGS	LF	21	WOOD SIGN SUPPORT 6 INCH X 8 INCH	LF	32	ICELS 150 WATT NARROW DISTRIBUTION LAMP AND LUMINAIRE	EA			
11	CONCRETE FOR SIGN FOUNDATION	CY	22	BAND SIGN TO SIGN SUPPORT	EA	33	REMOVE BRIDGE MOUNTED SIGN SUPPORT	EA			

RK&K
81 MOSHER STREET | BALTIMORE, MD 21217
PH: (410) 728-2900 FAX: (410) 728-3160
Engineers Construction Managers Planners Scientists
www.rkk.com

MARYLAND TRANSPORTATION AUTHORITY
Engineering Division

ADDENDUMS & REVISIONS

NO.	DESCRIPTION	BY	DATE

I-95 FROM MORAVIA ROAD TO THE FORT McHENRY TUNNEL - PHASE 1 - SOUTHBOUND

I-95 (BALTIMORE CITY)

INDEX OF QUANTITIES

CONTRACT NO. FT 928-000-006

DRAWING NO. SN-11.1

DESIGNED BY MLH | DRAWN BY MLH | CHECKED BY BLB

CONST. REVIEW BY | DATE DECEMBER 2009 | SCALE NONE

M:\projects\2005\05041_mdta\Task 13 - Moravia to FMT Design\CADD\Phase 1 - SB\Plans\Traffic\pSN-P1101_plsb_I95.dgn

Friday, December 04, 2009 AT 05:55 AM

SHEET NO.	SIGN NO.	REMARKS	CODE NUMBERS * 1	2	3	4	5	6	7	8	9	10	11	12	13	14	15	16	17	18	19	20	21	22	23	24	25	26	27	28	29	30	31	32	33	34
SN-2.6	-	RAISED PAVEMENT MARKERS	88	44	-	-	-	-	-	-	-	-	-	-	-	-	-	-	-	-	-	-	-	-	-	-	-	-	-	-	-	-	-	-	-	-
	-	PAVEMENT MARKINGS	-	-	3625	1244	482	735	71	745	275	50	-	-	-	-	-	-	-	-	-	-	-	-	-	-	-	-	-	-	-	-	-	-	-	-
	-	REMOVAL OF SIGNS	-	-	-	-	-	-	-	-	-	-	-	-	-	-	-	-	71.08	-	-	-	-	-	-	-	-	-	-	-	-	-	-	-	-	-
	601	D10-5 (18"X60") SQUARE PERFORATED STEEL POST WITH ANCHOR BASE	-	-	-	-	-	-	-	-	-	-	-	-	1	1	7.5	-	-	-	-	-	-	-	-	-	-	-	-	-	-	-	-	-	-	-
	602	D10-2a (12"X48") SQUARE PERFORATED STEEL POST WITH ANCHOR BASE	-	-	-	-	-	-	-	-	-	-	-	-	1	1	4	-	-	-	-	-	-	-	-	-	-	-	-	-	-	-	-	-	-	-
	603	R2-1 (60"X60"X60") SQUARE PERFORATED STEEL POST WITH ANCHOR BASE	-	-	-	-	-	-	-	-	-	-	-	-	2	2	10.83	-	-	-	-	-	-	-	-	-	-	-	-	-	-	-	-	-	-	-
		TOTAL THIS SHEET	88	44	3625	1244	482	735	71	745	275	50	-	-	4	4	22.33	-	72	-	-	-	-	-	-	-	-	-	-	-	-	-	-	-	-	-
		TOTAL SHEET SN-11.1	436	250	18793	4299	6185	1358	1488	2475	3615	339	85	59	14	14	403	1312	190.5	1	3	113	50	9	-	1	2828	564	59	17	1	1	1	25	1	5
		TOTAL SN-11.1 AND SN-11.2	524	294	22418	5543	6667	2093	1559	3220	3890	389	85	59	18	18	426	1312	263	1	3	113	50	9	-	1	2828	564	59	17	1	1	1	25	1	5

* CODE NUMBER DESCRIPTION & UNIT

CODE NUMBERS	DESCRIPTION	UNIT	CODE NUMBERS	DESCRIPTION	UNIT	CODE NUMBERS	DESCRIPTION	UNIT	CODE NUMBERS	DESCRIPTION	UNIT
1	SNOWPLOWABLE RAISED PAVEMENT MARKERS	EA	12	WOOD SIGN SUPPORT 4 INCH X 6 INCH	LF	23	NOT USED	SF	34	BRIDGE MOUNTED SIGN SUPPORT (SPECIAL)	EA
2	REMOVE SNOWPLOWABLE RAISED PAVEMENT MARKERS	EA	13	SQUARE PERFORATED TUBULAR STEEL SIGN POSTS	EA	24	INSTALL BREAKAWAY BASE SUPPORT SYSTEM FOR STEEL BEAM SIGN POST	EA			
3	REMOVE EXISTING PAVEMENT MARKINGS ANY WIDTH	LF	14	SQUARE TUBULAR STEEL ANCHOR BASES	EA	25	CABLE - 1 CONDUCTOR, NO. 10 AWG, TYPE THWN/THHN, 600V	LF			
4	5" WHITE PERM PATTERNED REFLECT PAVEMENT MARKINGS	LF	15	SHEET ALUMINUM SIGN	SF	26	1 INCH DIAMETER RIGID STEEL CONDUIT, SCHEDULE 40 FOR SIGN STRUCTURE	LF			
5	5" WHITE PERM PATTERNED REFLECT CONTRAST PAVEMENT MARKINGS	LF	16	EXTRUDED ALUMINUM SIGN	SF	27	1 INCH DIAMETER FLEXIBLE STEEL CONDUIT	LF			
6	10" WHITE PERM PATTERNED REFLECT PAVEMENT MARKINGS	LF	17	REMOVE EXISTING GROUND MOUNTED SIGNS AND SUPPORTS	SF	28	GALVANIZED STEEL BEAMS (W14X30)	LF			
7	10" WHITE PERM PATTERNED REFLECT CONTRAST PAVEMENT MARKINGS	LF	18	REMOVE EXISTING CANTILEVER STRUCTURE AND SIGN AND SUPPORT	EA	29	NOT USED	EA			
8	5" YELLOW PERM PATTERNED REFLECT PAVEMENT MARKINGS	LF	19	REMOVE EXISTING OVERHEAD SIGN STRUCTURE AND SIGNS AND SUPPORTS	EA	30	REMOVE EXISTING OVERHEAD SIGNS AND STRUCTURE	EA			
9	5" YELLOW PERM PATTERNED REFLECT CONTRAST PAVEMENT MARKINGS	LF	20	WOOD SIGN SUPPORT 6 INCH X 6 INCH	LF	31	REMOVE EXISTING CANTILEVER SIGNS AND STRUCTURE	EA			
10	16" WHITE PERM PATTERNED REFLECT PAVEMENT MARKINGS	LF	21	WOOD SIGN SUPPORT 6 INCH X 8 INCH	LF	32	ICELS 150 WATT NARROW DISTRIBUTION LAMP AND LUMINAIRE	EA			
11	CONCRETE FOR SIGN FOUNDATION	CY	22	BAND SIGN TO SIGN SUPPORT	EA	33	REMOVE BRIDGE MOUNTED SIGN SUPPORT	EA			

RK&K
81 MOSHER STREET | BALTIMORE, MD 21217
PH: (410) 728-2900 FAX: (410) 728-3160
Engineers Construction Managers Planners Scientists
www.rkk.com

MARYLAND TRANSPORTATION AUTHORITY
Engineering Division

ADDENDUMS & REVISIONS			
NO.	DESCRIPTION	BY	DATE

I-95 FROM MORAVIA ROAD TO THE FORT McHENRY TUNNEL - PHASE 1 - SOUTHBOUND

I-95 (BALTIMORE CITY)

INDEX OF QUANTITIES

CONTRACT NO. FT 928-000-006

DRAWING NO. SN-11.2

DESIGNED BY MLH | DRAWN BY MLH | CHECKED BY BLB

CONST. REVIEW BY | DATE DECEMBER 2009 | SCALE NONE

M:\projects\2005\05041_mdta\Task 13 - Moravia to FMT Design\CADD\Phase 1 - SB\Plans\Traffic\pSN-P1102_plsb_I95.dgn

Friday, December 04, 2009 AT 05:56 AM

LIGHTING LEGEND

- HM-# — HIGH MAST WITH 4-400 WATT LUMINAIRES INDICATES LIGHT POLE NUMBER
- HM-# — HIGH MAST WITH 6-400 WATT LUMINAIRES INDICATES LIGHT POLE NUMBER
- XX-XXX — EXISTING CANTILEVER STRUCTURE CONTRACT NUMBER
- XX-XXX — PROPOSED CANTILEVER STRUCTURE CONTRACT NUMBER
- XX-XXX — EXISTING OVERHEAD STRUCTURE CONTRACT NUMBER
- XX-XXX — PROPOSED OVERHEAD STRUCTURE CONTRACT NUMBER
- GROUND ROD
- Ⓔ — EXISTING ELECTRICAL MANHOLE TO BE MAINTAINED
- E — PROPOSED ELECTRICAL MANHOLE
- J — PROPOSED ELECTRICAL JUNCTION BOX (20"X10"X8") OR (10"X10"X8")
- V — PROPOSED COMMUNICATION VAULT (48"X48"X48")
- CM — PROPOSED COMMUNICATION MANHOLE
- JC — PROPOSED COMMUNICATION JUNCTION BOX (20"X10"X18")
  NOTE: ONLY SHOWN FOR FUTURE CCTV CAMERA LOCATION. JUNCTION BOXES SHALL BE INSTALLED AT 200 FT. INTERVALS ALONG BARRIER WALL.
- C — EXISTING LIGHTING CONTROL CABINET
- EXISTING JUNCTION BOX
- PROPOSED CABLE IN BARRIER WALL
- PROPOSED TRENCHED ELECTRICAL CONDUIT
- PROPOSED BORED OR SUSPENDED ELECTRICAL CONDUIT
- PROPOSED DUCT CABLE
- #XG — TYPE & SIZE OF CABLE(S) IN TRENCH; TOTAL NUMBER OF CABLES IN TRENCH
- MH-1 / 0 4 — ELECTRICAL MANHOLE/HANDHOLE/JUNCTION BOX; NUMBER OF TYPE 4 CONNECTOR KITS; NUMBER OF TYPE 1 CONNECTOR KITS
- — E — EXISTING CONDUIT OR CABLE TO REMAIN (UNLESS OTHERWISE NOTED)
- — FO — EXISTING FIBER OPTIC CABLE TO REMAIN (UNLESS OTHERWISE NOTED)
- 4G — #4 AWG STRANDED BARE COPPER GROUND WIRE
- 6G — #6 AWG STRANDED BARE COPPER GROUND WIRE
- A — 1/C #2 AWG ELECTRICAL CABLE
- B — 1/C #4 AWG ELECTRICAL CABLE
- C — 1/C #6 AWG ELECTRICAL CABLE
- D — 4/C #4 AWG DUCT CABLE
- E — 1/C #10 AWG ELECTRICAL CABLE
- F — 4/C #6 AWG DUCT CABLE
- G — 2/C #4 AWG DUCT CABLE

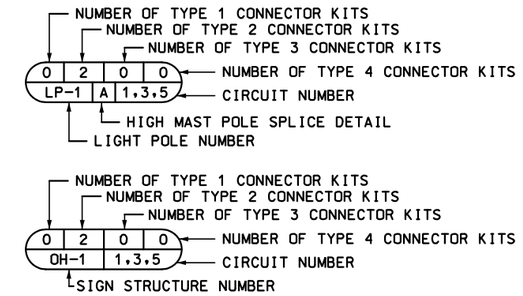

GENERAL NOTES: (APPLY TO DWGS. E-1 THROUGH E-7 ONLY)

1. NO LUMINAIRE SHALL BE WITHOUT POWER DURING NIGHT TIME HOURS WITHOUT WRITTEN PERMISSION FROM THE ENGINEER. A PORTABLE GENERATOR SHALL BE USED TO POWER FACILITIES THAT CANNOT BE RE-ENERGIZED TO CABINET CIRCUITS PRIOR TO NIGHT TIME HOURS.
2. DUCT CABLE ROUTING IS SHOWN SCHEMATICALLY. DUCT CABLE SHALL SHARE A COMMON TRENCH AND SHALL BE INSTALLED A MINIMUM OF 5 FEET BEHIND THE BACK OF TRAFFIC BARRIER UNLESS OTHERWISE DIRECTED BY THE ENGINEER.
3. REFER TO THE MARYLAND STATE HIGHWAY ADMINISTRATION BOOK OF STANDARDS FOR LIGHTING AND ELECTRICAL DETAILS.
4. EXISTING ELECTRICAL AND FIBER OPTIC CABLE LOCATIONS ARE SHOWN FOR REFERENCE ONLY. VERIFY EXACT LOCATIONS IN THE FIELD. COORDINATE INSTALLATION OF PROPOSED CABLE WITH EXISTING LOCATIONS. FOR LOCATIONS OF UTILITIES, CALL MISS UTILITY 1-800-257-7777 48 HOURS AND MR. JEFF ROBSON 410-537-1274 72 HOURS IN ADVANCE OF PERFORMING WORK.
5. THE CONTRACTOR IS RESPONSIBLE FOR PROVIDING TEMPORARY ELECTRICAL CONNECTORS FOR EXISTING LUMINAIRES. HIGH MAST POLE SPLICE DETAIL A & B DESCRIBE MEANS BY WHICH THE TEMPORARY ELECTRICAL CONNECTIONS WILL BE MADE. FOR TEMPORARY ELECTRICAL CIRCUITS RUN ON THE BRIDGE GIRDERS, THE CONTRACTOR SHALL MATCH THE NUMBER OF CONDUCTORS AND CONDUCTOR SIZE USED IN THE EXISTING ELECTRICAL SYSTEM RUN IN THE EXISTING CONCRETE BARRIER WALL.
6. THE TEMPORARY ELECTRICAL LIGHTING SYSTEM INSTALLED ON BRIDGE GIRDERS SHALL TIE INTO THE EXISTING IN-GROUND ELECTRICAL DUCT CABLE SYSTEM PRIOR TO RUNNING ALONG THE BRIDGE. THIS CONNECTION SHALL BE MADE BY INTERCEPTING THE EXISTING DUCT CABLE WITH A MANHOLE/HANDHOLE. PAYMENT FOR THIS INTERCEPTION SHALL BE INCLUDED IN THE LUMP SUM "TEMPORARY ELECTRICAL LIGHTING SYSTEM" ITEM.
7. THE LUMP SUM "TEMPORARY ELECTRICAL LIGHTING SYSTEM" ITEM SHALL INCLUDED ALL CONDUITS, CABLES, MANHOLE, HANDHOLES, CONNECTOR KITS, CAPS, CONDULETS, CONDUIT BEAM CLAMPS, GROUND RODS, WATERPROOF SPLICE KITS, CABLE REROUTING, CABLE CONNECTION, REMOVAL OF TEMPORARY ELECTRICAL LIGHTING SYSTEM, EXCAVATION, AND FOR ALL MATERIAL, LABOR, EQUIPMENT, TOOLS, AND INCIDENTALS NECESSARY TO COMPLETE THE WORK. ALL TEMPORARY ELECTRICAL LIGHTING SYSTEM WORK SHALL BE IN COMPLIANCE WITH ALL NEC, SHA AND MDTA ELECTRICAL AND LIGHTING REQUIREMENTS.
8. TEMPORARY ELECTRICAL LIGHTING SYSTEM COMPONENTS INSTALLED ON BRIDGE GIRDERS SHALL BE PROPERLY GROUND AS SPECIFIED IN THE NATIONAL ELECTRIC CODE (NEC).
9. JUNCTION BOXES INSTALLED IN CONCRETE BARRIER WALL SHALL BE INCIDENTAL TO THE CONCRETE BARRIER WALL. REFER TO ROADWAY PLANS.
10. UNDERGROUND UTILITIES SHOWN ON THESE PLANS ARE SCHEMATIC ONLY AND MAY NOT BE COMPLETE. THE CONTRACTOR SHALL BE RESPONSIBLE FOR NOTIFYING "MISS UTILITY" AND MDTA PRIOR TO CONSTRUCTION SO THAT ALL UTILITIES MAY BE LOCATED IN THE FIELD. IF THE CONTRACTOR PERCEIVES THAT A CONFLICT BETWEEN THE UTILITIES AND THE PROPOSED EQUIPMENT WILL OCCUR, THE CONTRACTOR SHALL NOTIFY THE ENGINEER IMMEDIATELY SO THAT THE CONFLICT MAY BE RESOLVED.
11. THE OPERATING VOLTAGE FOR ALL EXISTING LUMINAIRES IS 277 VAC.
12. MDTA WILL LOCATE AND MARK ALL MDTA UTILITIES WITHIN THE PROJECT LIMITS. THE CONTRACTOR SHALL BE RESPONSIBLE FOR MAINTAINING THE MARKINGS AFTER INITIAL IDENTIFICATION.
13. ELECTRICAL JUNCTION BOXES SHALL BE INSTALLED AS SHOWN ON PLANS. THERE SHALL BE NO MORE THAN 200' BETWEEN CONSECUTIVE ELECTRICAL JUNCTION BOXES. COMMUNICATION JUNCTION BOXES SHALL BE INSTALLED AS SHOWN ON PLAN AND EVERY 200'. THERE SHALL BE NO MORE THAN 200' BETWEEN CONSECUTIVE COMMUNICATION JUNCTION BOXES. CONDUITS FOR ELECTRICAL CABLES SHALL NOT SHARE JUNCTION BOXES WITH CONDUITS FOR COMMUNICATION CABLES.
14. ALL SPLICES IN BARRIER WALL OR STRUCTURES SHALL BE WATERTIGHT. ALL SPLICES IN MANHOLES SHALL BE SUBMERSIBLE.
15. HDPE DUCT CABLE SHALL BE USED FOR ALL DUCT CABLES BETWEEN SIGN STRUCTURES AND NEAREST MANHOLE.
16. CONNECTOR KITS SHALL BE RATED AT 50 AMPS.
17. GROUND WIRE SHALL BE CONNECTED TO GROUNDING LUG IN ALL JUNCTION BOXES IN BARRIER WALL.

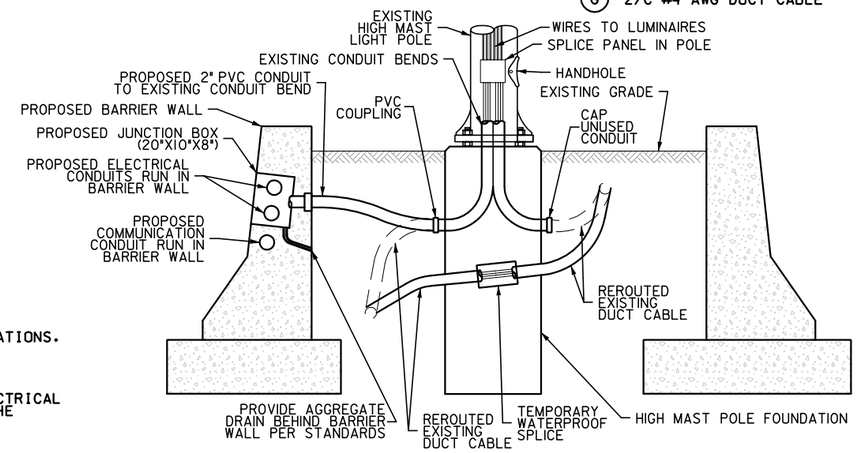

SECTION A-A
NOT TO SCALE

NOTE: EXISTING DUCT CABLE SHALL BE ABANDONED ONCE INSTALLATION OF ULTIMATE SYSTEM IS COMPLETED.

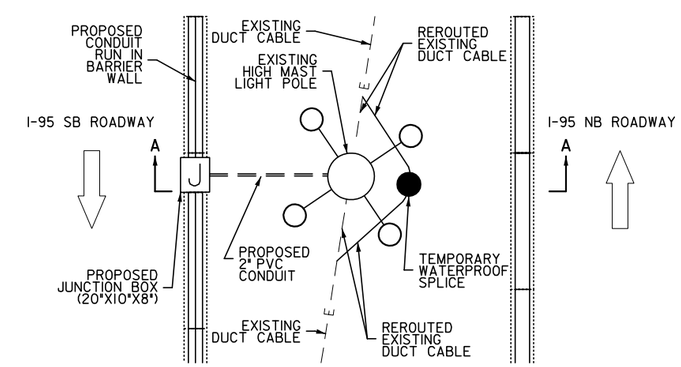

HIGH MAST POLE SPLICE DETAIL A
NOT TO SCALE

NOTE: CONTRACTOR SHALL VERIFY THE BENDING REQUIREMENTS NECESSARY FOR EACH LOCATION PRIOR TO ORDERING MATERIALS.

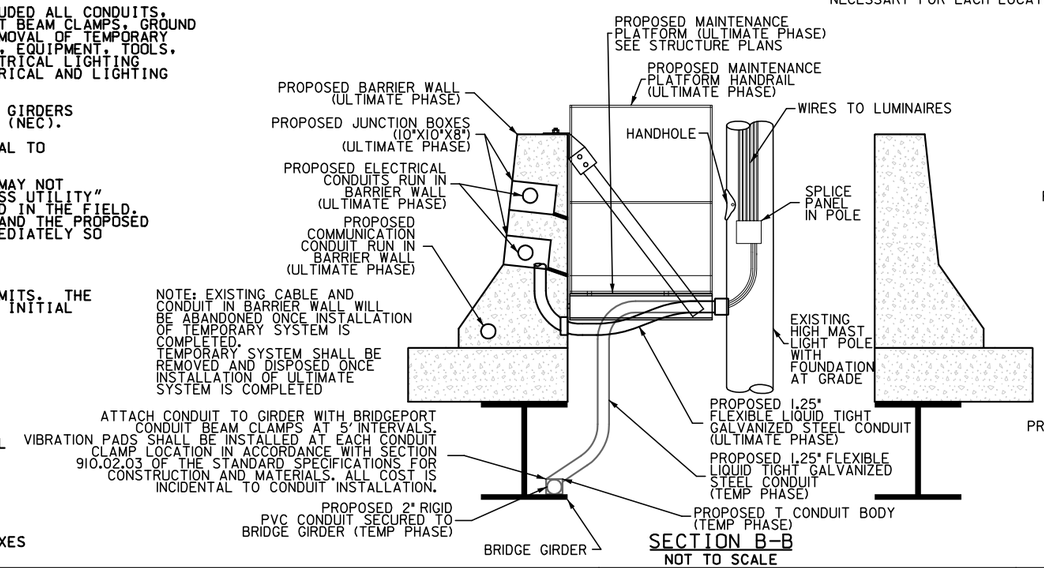

SECTION B-B
NOT TO SCALE

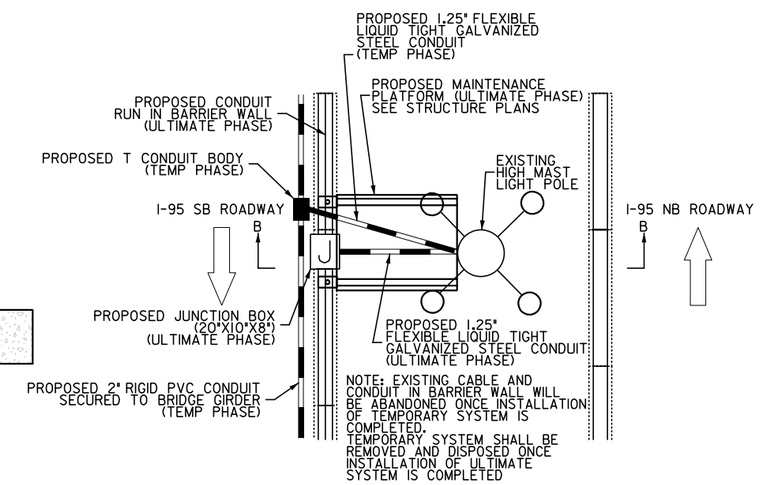

HIGH MAST POLE SPLICE DETAIL B
NOT TO SCALE

RK&K
81 MOSHER STREET | BALTIMORE, MD 21217
PH: (410) 728-2900 FAX: (410) 728-3160
Engineers Construction Managers Planners Scientists
www.rkk.com

MARYLAND TRANSPORTATION AUTHORITY
Engineering Division

ADDENDUMS & REVISIONS

NO.	DESCRIPTION	BY	DATE

I-95 FROM MORAVIA ROAD TO THE FORT McHENRY TUNNEL - PHASE 1 - SOUTHBOUND
I-95 (BALTIMORE CITY)
GENERAL NOTES AND LEGEND

DESIGNED BY BJG	DRAWN BY BJG	CHECKED BY DAE	
CONST. REVIEW BY	DATE DECEMBER 2009	SCALE AS SHOWN	

CONTRACT NO. FT 928-000-006
DRAWING NO. E-1
SHEET NO. 175 OF 188

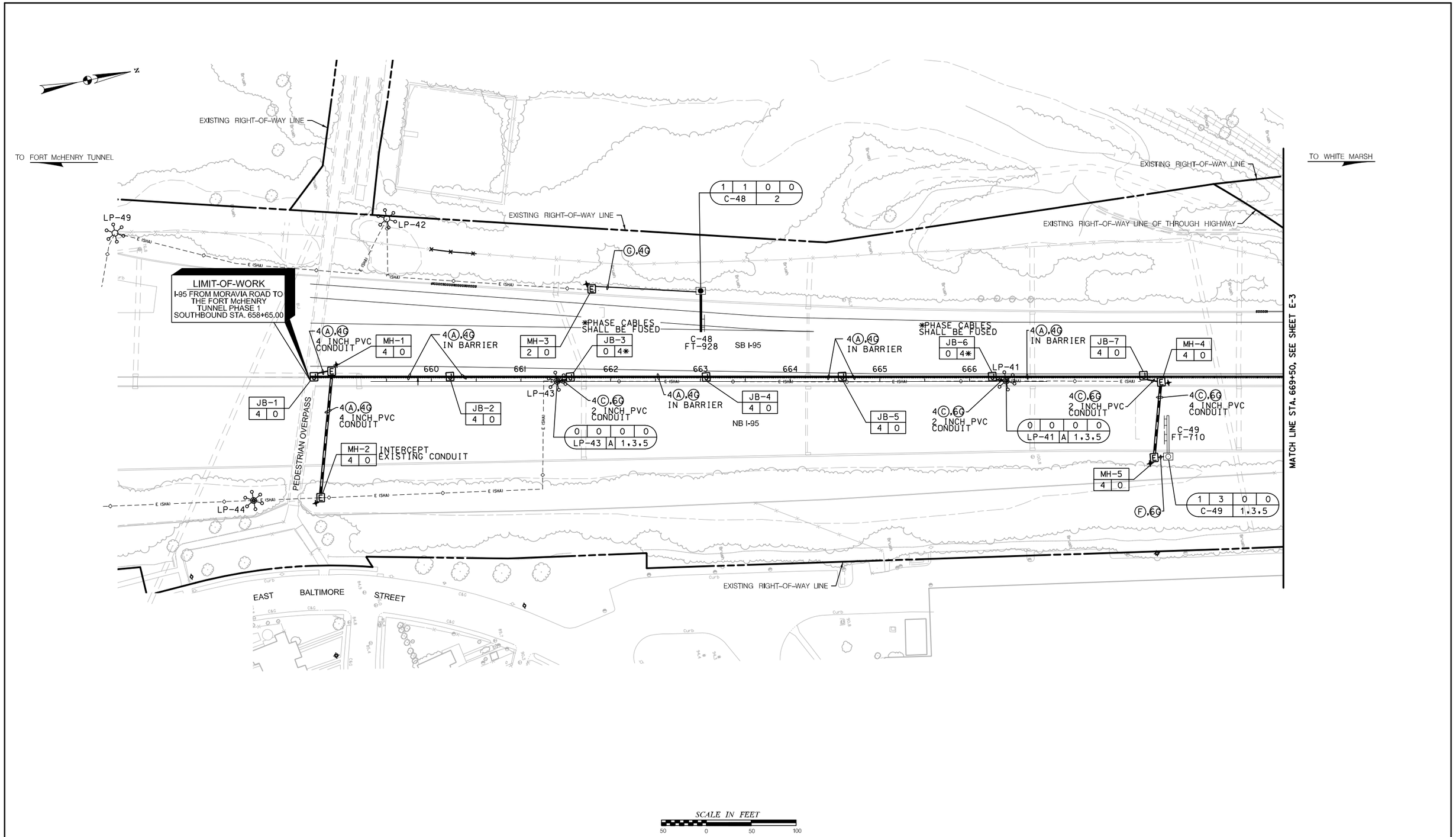

RK&K
81 MOSHER STREET | BALTIMORE, MD 21217
PH: (410) 728-2900 FAX: (410) 728-3160
Engineers Construction Managers Planners Scientists
www.rkk.com

MARYLAND TRANSPORTATION AUTHORITY
Engineering Division

ADDENDUMS & REVISIONS			
NO.	DESCRIPTION	BY	DATE

I-95 FROM MORAVIA ROAD TO THE FORT McHENRY TUNNEL - PHASE 1 - SOUTHBOUND

I-95 (BALTIMORE CITY)

ELECTRICAL PLAN

DESIGNED BY BJG	DRAWN BY BJG	CHECKED BY DAE
CONST. REVIEW BY	DATE DECEMBER 2009	SCALE AS SHOWN

CONTRACT NO. FT 928-000-006

DRAWING NO. E-2

SHEET NO. 176 OF 188

M:\projects\2005\05041_mdta\Task 13 - Moravia to FMT Design\CADD\Phase 1 - SB\Plans\Traffic\pUT-P002_plsb_I95.dgn

Thursday, December 03, 2009 AT 08:13 AM

TO FORT McHENRY TUNNEL

TO WHITE MARSH

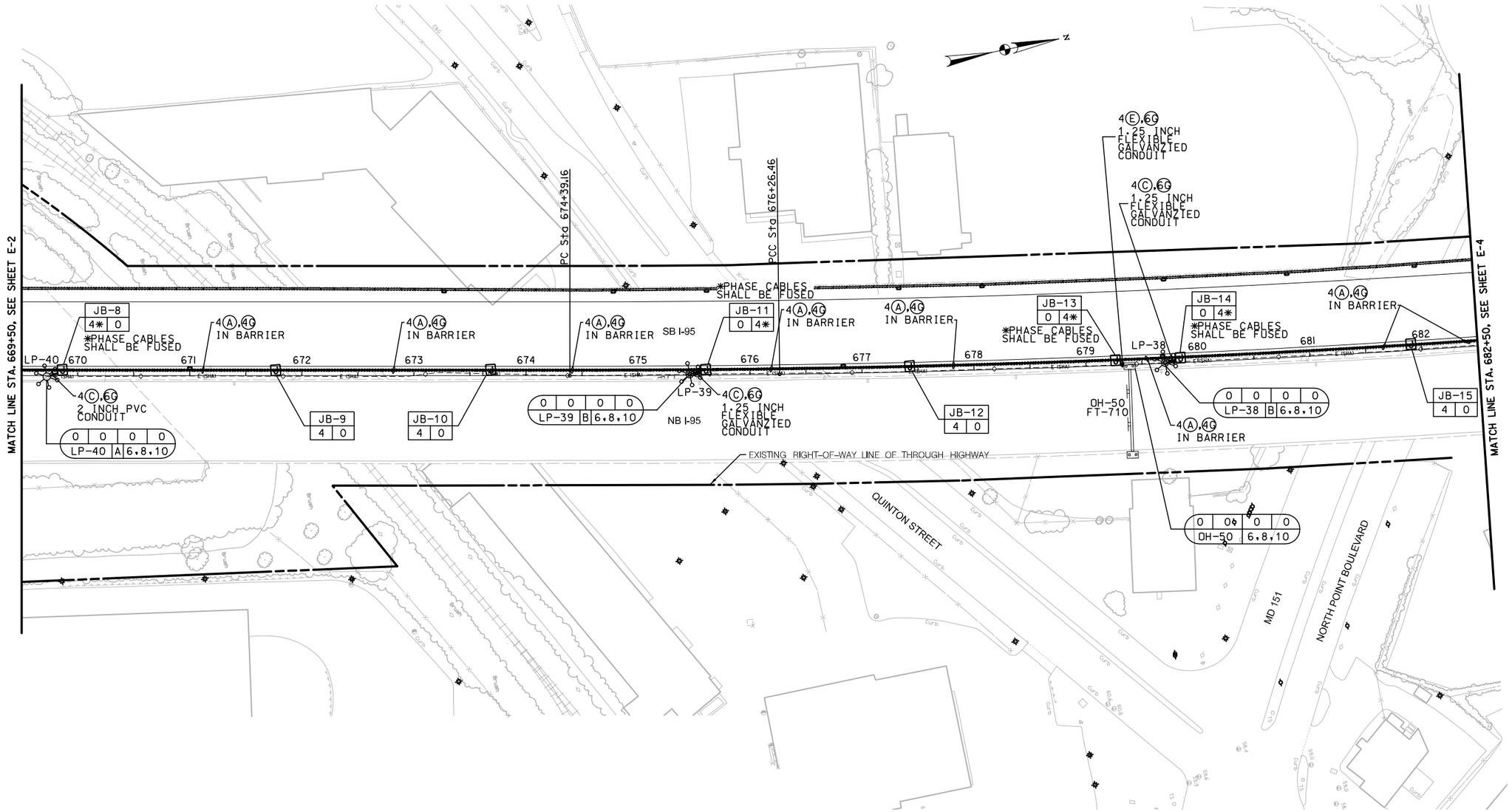

SCALE IN FEET

50 0 50 100

RK&K

81 MOSHER STREET | BALTIMORE, MD 21217

PH: (410) 728-2900 FAX: (410) 728-3160

Engineers Construction Managers Planners Scientists

www.rkk.com

MARYLAND TRANSPORTATION AUTHORITY

Engineering Division

ADDENDUMS & REVISIONS			
NO.	DESCRIPTION	BY	DATE

I-95 FROM MORAVIA ROAD TO THE FORT McHENRY TUNNEL - PHASE 1 - SOUTHBOUND

I-95 (BALTIMORE CITY)

ELECTRICAL PLAN

DESIGNED BY BJG	DRAWN BY BJG	CHECKED BY DAE
CONST. REVIEW BY	DATE DECEMBER 2009	SCALE AS SHOWN

CONTRACT NO. FT 928-000-006

DRAWING NO. E-3

SHEET NO. 177 OF 188

M:\projects\2005\05041_mdta\Task 13 - Moravia to FMT Design\CADD\Phase 1 - SB\Plans\Traffic\pUT-P003_plsb_I95.dgn

Thursday, December 03, 2009 AT 08:14 AM

TO FORT McHENRY TUNNEL

TO WHITE MARSH

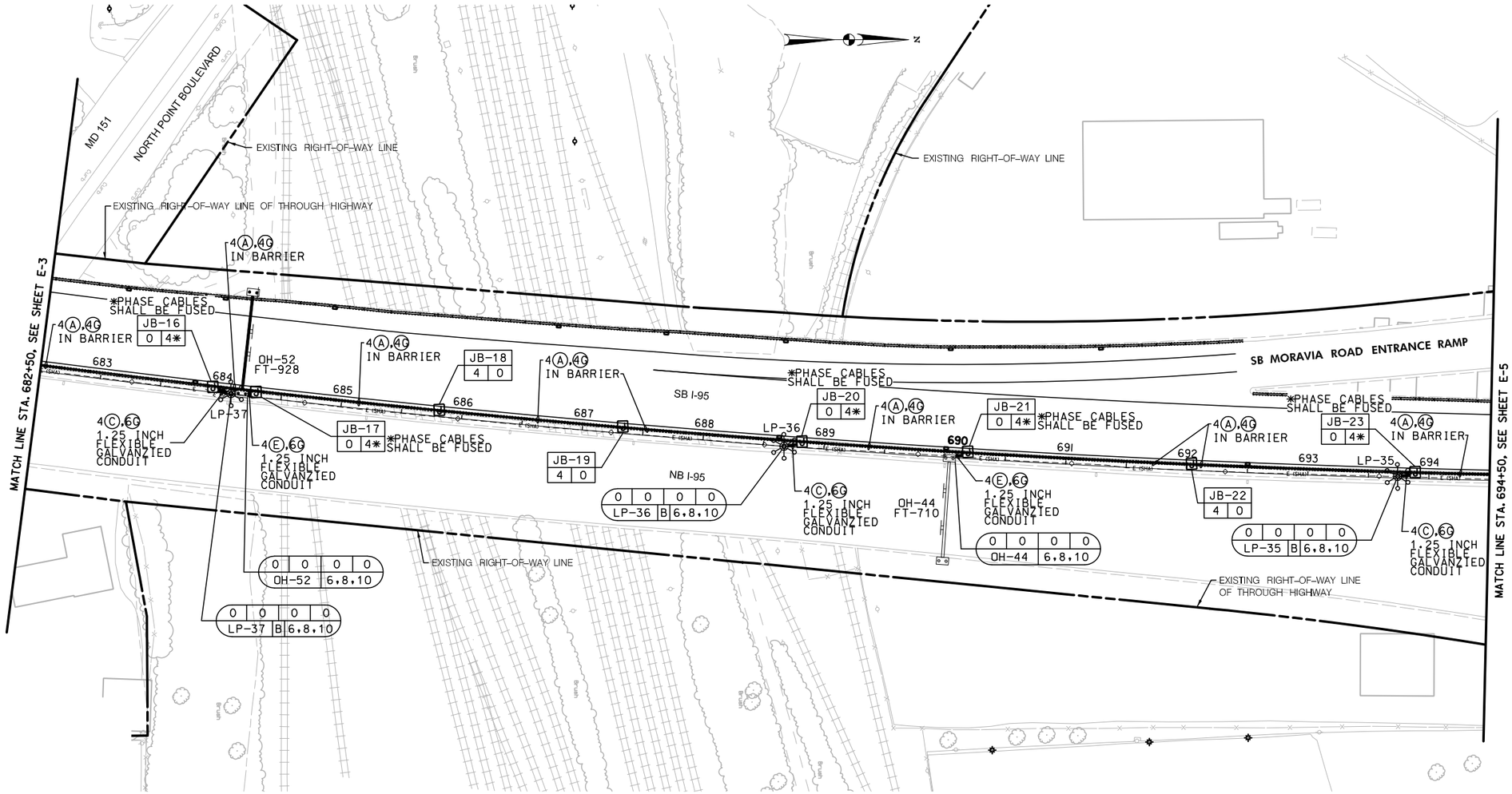

RK&K

81 MOSHER STREET | BALTIMORE, MD 21217

PH: (410) 728-2900 FAX: (410) 728-3160

Engineers Construction Managers Planners Scientists

www.rkk.com

MARYLAND TRANSPORTATION AUTHORITY

Engineering Division

ADDENDUMS & REVISIONS

NO.	DESCRIPTION	BY	DATE

I-95 FROM MORAVIA ROAD TO THE FORT McHENRY TUNNEL - PHASE 1 - SOUTHBOUND

I-95 (BALTIMORE CITY)

ELECTRICAL PLAN

DESIGNED BY BJG | DRAWN BY BJG | CHECKED BY DAE

CONST. REVIEW BY _____ | DATE DECEMBER 2009 | SCALE AS SHOWN

CONTRACT NO. FT 928-000-006

DRAWING NO. E-4

SHEET NO. 178 OF 188

M:\projects\2005\05041_mdta\Task 13 - Moravia to FMT Design\CADD\Phase 1 - SB\Plans\Traffic\pUT-P004_plsb_I95.dgn

Thursday, December 03, 2009 AT 08:14 AM

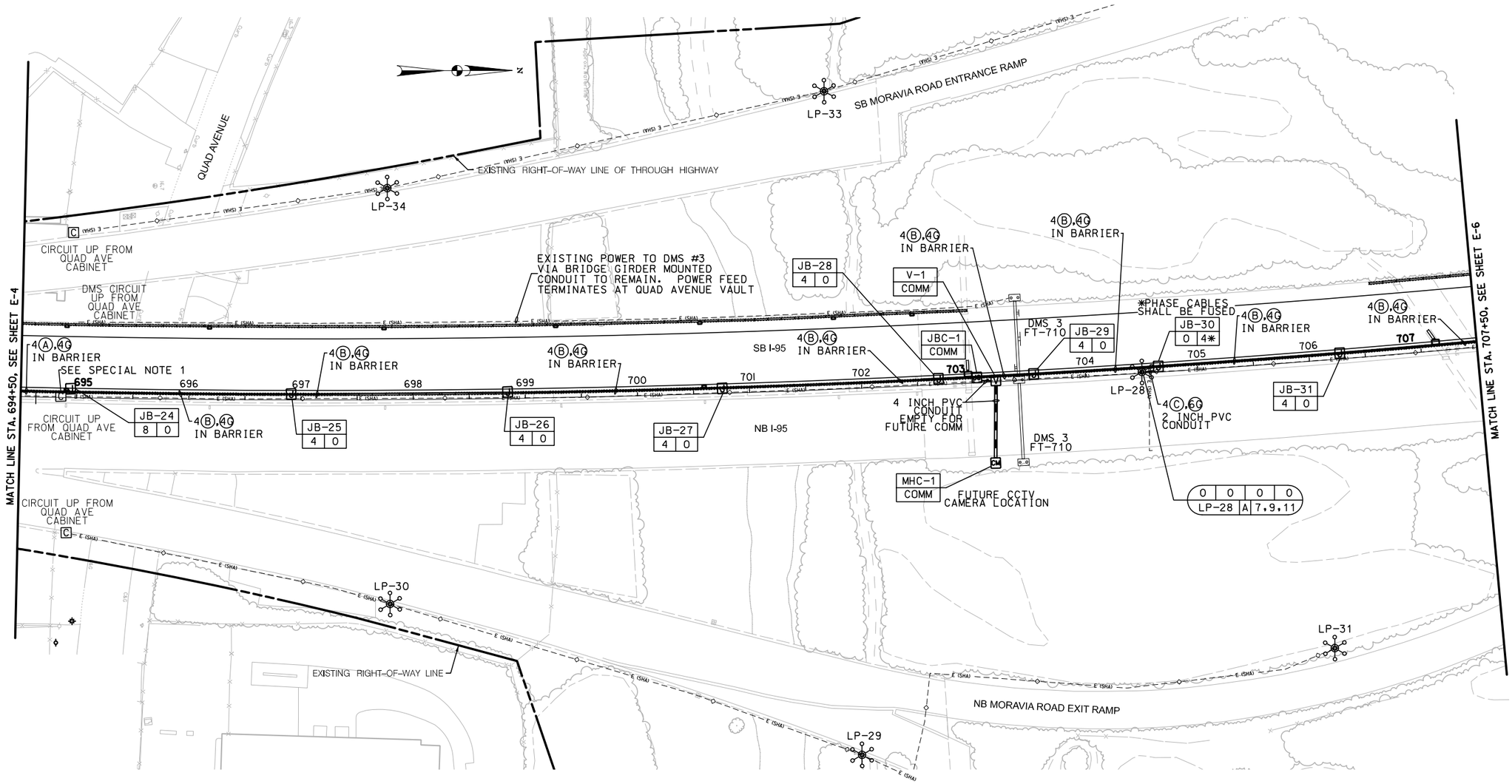

SPECIAL NOTE

1. CONTRACTOR SHALL INTERCEPT AND REROUTE EXISTING CONDUITS TO PROPOSED JUNCTION BOX. DURING TEMPORARY PHASE, CONTRACTOR SHALL INTERCEPT CONDUITS UP FROM QUAD AVE CABINET TO POWER TEMPORARY LIGHTING SYSTEM. INTERCEPT AND REROUTE WORK FOR TEMPORARY AND ULTIMATE SYSTEMS SHALL BE INCIDENTAL TO "TEMPORARY ELECTRICAL LIGHTING SYSTEM" ITEM. IF ADDITIONAL CONDUITS AND FITTINGS MUST BE FURNISHED & INSTALLED TO PROVIDE A CONNECTION TO THE PROPOSED JUNCTION BOX, THE CONDUITS & FITTINGS SHALL ALSO BE INCIDENTAL.

SCALE IN FEET
50 0 50 100

RK&K
81 MOSHER STREET | BALTIMORE, MD 21217
PH: (410) 728-2900 FAX: (410) 728-3160
Engineers Construction Managers Planners Scientists
www.rkk.com

MARYLAND TRANSPORTATION AUTHORITY
Engineering Division

ADDENDUMS & REVISIONS			
NO.	DESCRIPTION	BY	DATE

I-95 FROM MORAVIA ROAD TO THE FORT McHENRY TUNNEL - PHASE 1 - SOUTHBOUND

I-95 (BALTIMORE CITY)

ELECTRICAL PLAN

DESIGNED BY BJG	DRAWN BY BJG	CHECKED BY DAE
CONST. REVIEW BY	DATE DECEMBER 2009	SCALE AS SHOWN

CONTRACT NO. FT 928-000-006
DRAWING NO. E-5
SHEET NO. 179 OF 188

TO FORT McHENRY TUNNEL

TO WHITE MARSH

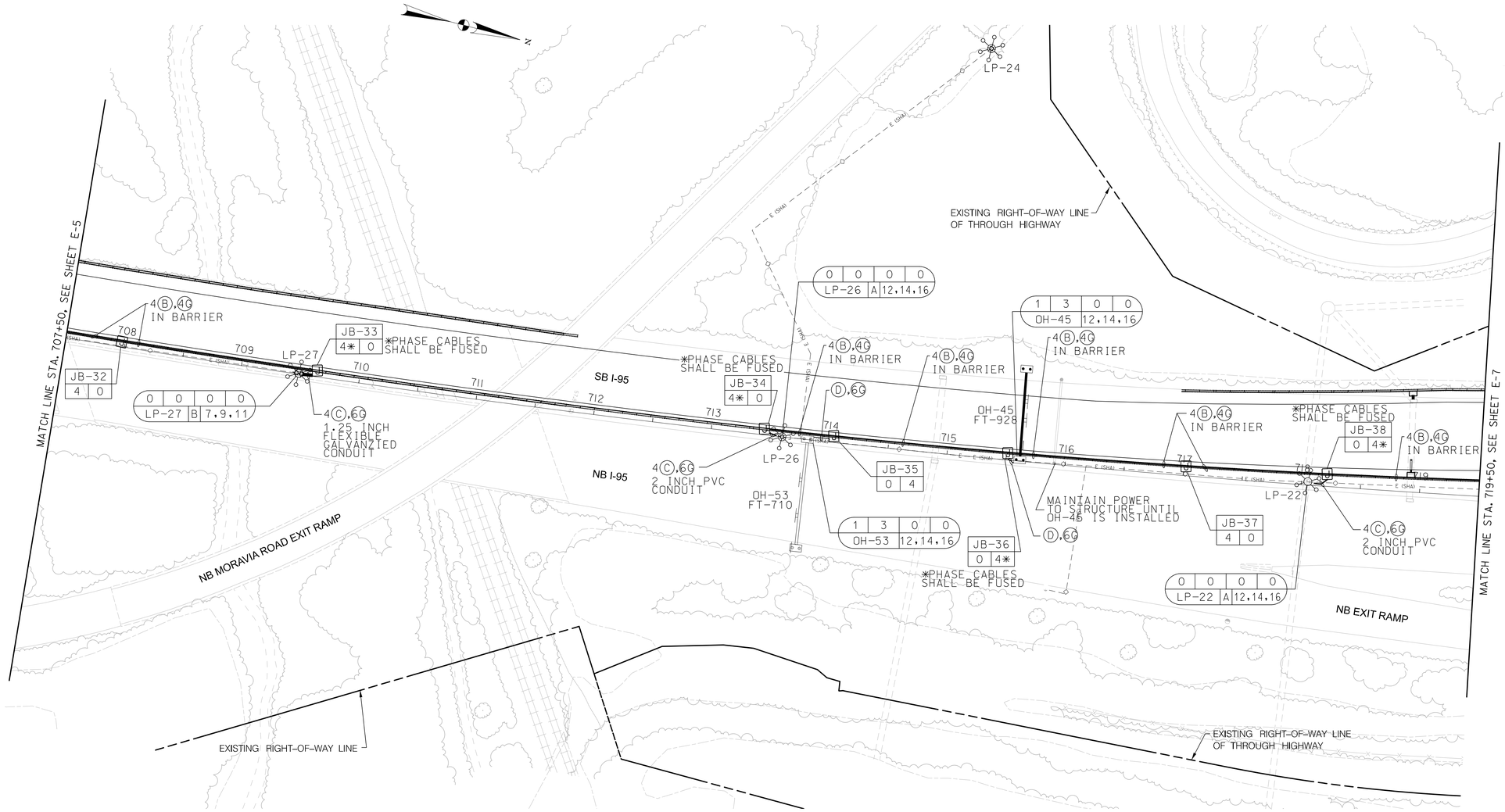

SCALE IN FEET

50 0 50 100

RK&K

81 MOSHER STREET | BALTIMORE, MD 21217

PH: (410) 728-2900 FAX: (410) 728-3160

Engineers Construction Managers Planners Scientists

www.rkk.com

MARYLAND TRANSPORTATION AUTHORITY

Engineering Division

ADDENDUMS & REVISIONS

NO.	DESCRIPTION	BY	DATE

I-95 FROM MORAVIA ROAD TO THE FORT McHENRY TUNNEL - PHASE 1 - SOUTHBOUND

I-95 (BALTIMORE CITY)

ELECTRICAL PLAN

DESIGNED BY BJG	DRAWN BY BJG	CHECKED BY DAE
CONST. REVIEW BY	DATE DECEMBER 2009	SCALE AS SHOWN

CONTRACT NO. FT 928-000-006

DRAWING NO. **E-6**

SHEET NO. 180 OF 188

M:\projects\2005\05041_mdta\Task 13 - Moravia to FMT Design\CADD\Phase 1 - SB\Plans\Traffic\pUT-P006_plsb_I95.dgn

Thursday, December 03, 2009 AT 08:16 AM

TO FORT McHENRY TUNNEL

TO WHITE MARSH

SPECIAL NOTE

1. CONDUIT INSTALLED UNDER ROADWAY SURFACE SHALL HAVE A MINIMUM COVER OF 30 INCHES AND SHALL NOT BE LOCATED WITHIN HOT MIX ASPHALT PAVEMENT SECTION AS SHOWN IN TYPICAL SECTIONS SHOWN ON DE-1.

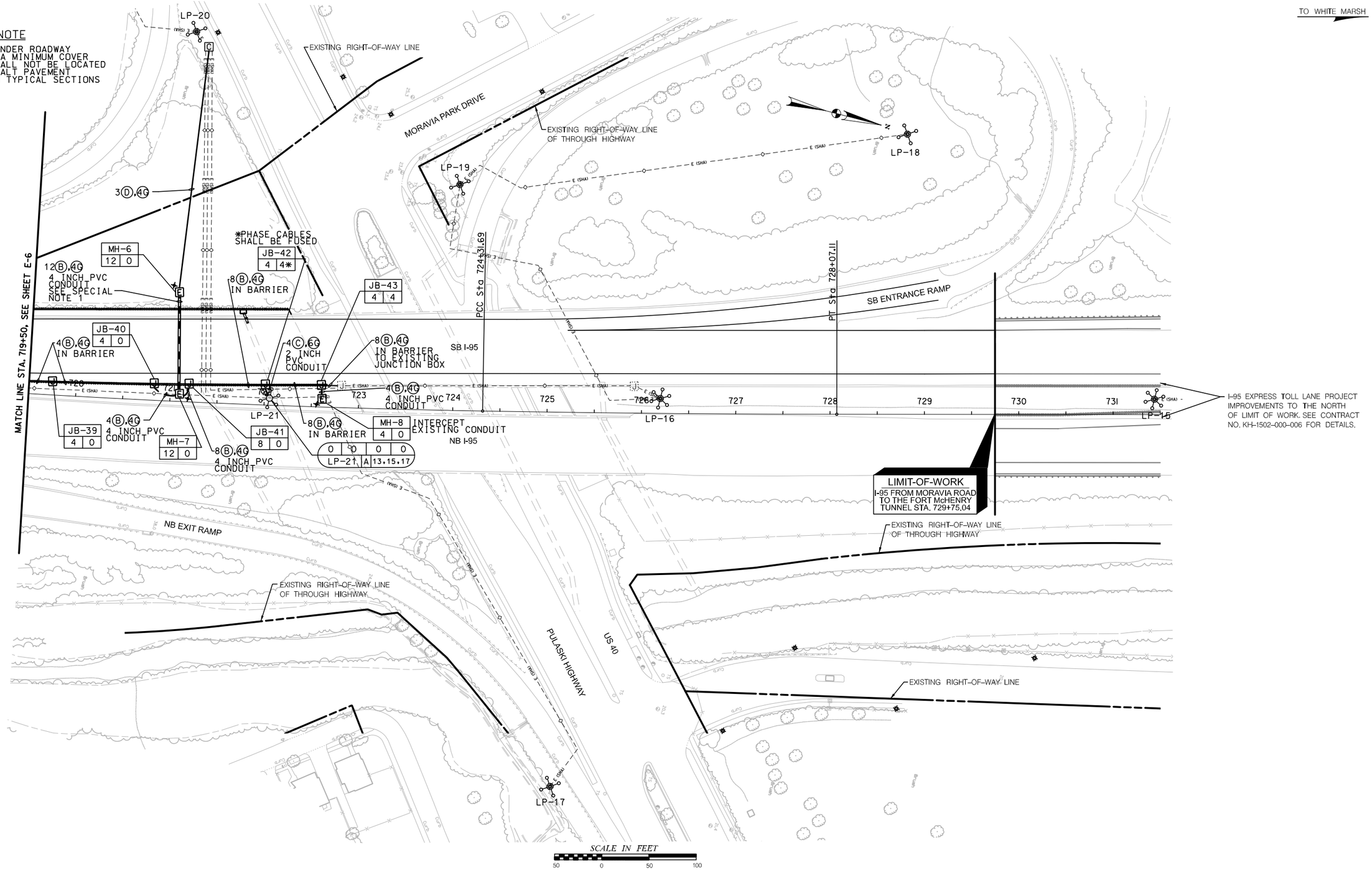

RK&K

81 MOSHER STREET | BALTIMORE, MD 21217

PH: (410) 728-2900 FAX: (410) 728-3160

Engineers Construction Managers Planners Scientists

www.rkk.com

MARYLAND TRANSPORTATION AUTHORITY

Engineering Division

ADDENDUMS & REVISIONS			
NO.	DESCRIPTION	BY	DATE

I-95 FROM MORAVIA ROAD TO THE FORT McHENRY TUNNEL - PHASE 1 - SOUTHBOUND

I-95 (BALTIMORE CITY)

ELECTRICAL PLAN

DESIGNED BY BJG	DRAWN BY BJG	CHECKED BY DAE	
CONST. REVIEW BY	DATE DECEMBER 2009	SCALE AS SHOWN	

CONTRACT NO. FT 928-000-006

DRAWING NO. E-7

SHEET NO. 181 OF 188

M:\projects\2005\0504I_mdta\Task 13 - Moravia to FMT Design\CADD\Phase 1 - SB\Plans\Traffic\pUT-P007_plsb_I95.dgn

Thursday, December 03, 2009 AT 08:15 AM

TO FORT McHENRY TUNNEL

TO WHITE MARSH

ORANGE CONSTRUCTION FENCE SHOULD BE PLACED ALONG THE LOD IN LOCATIONS ADJACENT TO EXISTING FOREST STANDS.

TOTAL TREES TO BE REMOVED = 34

LIMIT OF DISTURBANCE

EXISTING RIGHT-OF-WAY LINE OF THROUGH HIGHWAY

EXISTING RIGHT-OF-WAY LINE

HEDGEROW A

MAINTENANCE ACCESS ROAD

SCE

SB ENTRANCE RAMP FROM EASTERN AVENUE

SB EXIT RAMP TO EASTERN AVENUE

BIORETENTION FACILITY (BMP NO. :FT0004

18" RCP

6" PVC UNDERDRAIN

21" RCP IN FROM NORTH 5.8' DOWN. 24" RCP OUT TO SOUTH

E 1,444,200 N 590,950

E 1,444,200 N 591,650

N 591,650 E 1,444,500

EX. 36"

EX. 21"

EX. 18"

SB I-95

NB I-95

647 648 649 650 651 652 653 654 655

℄ OF CONSTRUCTION

N 11° 17' 20.40" E

NB ENTRANCE RAMP FROM EASTERN AVENUE

SCALE IN FEET

30 0 30 60

LEGEND

- EXISTING TREELINE
- PROPOSED TREELINE
- EXISTING TREE TO BE SAVED
- EXISTING TREE TO BE REMOVED

NOTES:

1. SEE "GENERAL LANDSCAPE NOTES" SHEET LA-3 OF 4 FOR PLANTING DETAILS.

RK&K

81 MOSHER STREET | BALTIMORE, MD 21217

PH: (410) 728-2900 FAX: (410) 728-3160

Engineers Construction Managers Planners Scientists

www.rkk.com

MARYLAND TRANSPORTATION AUTHORITY

Engineering Division

ADDENDUMS & REVISIONS

NO.	DESCRIPTION	BY	DATE

I-95 FROM MORAVIA ROAD TO THE FORT McHENRY TUNNEL - PHASE 1 - SOUTHBOUND

I-95 (BALTIMORE CITY)

BIORETENTION AREA - TREE REMOVAL PLAN

CONTRACT NO. FT 928-000-006

DRAWING NO. **LA-1 of 4**

DESIGNED BY J.M.R. | DRAWN BY R.W.T. | CHECKED BY K.B.K.

CONST. REVIEW BY | DATE DECEMBER 2009 | SCALE AS SHOWN

SHEET NO. 182 OF 188

M:\projects\2005\05041_mdta\Task 13 - Moravia to FMT Design\CADD\Phase 1 - SB\Plans\pla-P001_plsb_I95.dgn

Thursday, December 03, 2009 AT 11:38 AM

TO FORT McHENRY TUNNEL

TO WHITE MARSH

TREE PLANTING SCHEDULE

SPECIES	KEY	QUANTITY	SIZE	TYPE
ILEX OPACA (AMERICAN HOLLY)	AH	7	5' HT.	B&B
NYSSA SYLVATICA (BLACK GUM)	BG	7	2" CAL.	B&B
CERCIS CANADENSIS (EASTERN RED BUD)	ER	7	1.5" CAL.	B&B
TILIA AMERICANA (REDMOND LINDEN)	RL	7	2" CAL.	B&B
QUERCUS PHELLOS (WILLOW OAK)	WO	6	2" CAL.	B&B

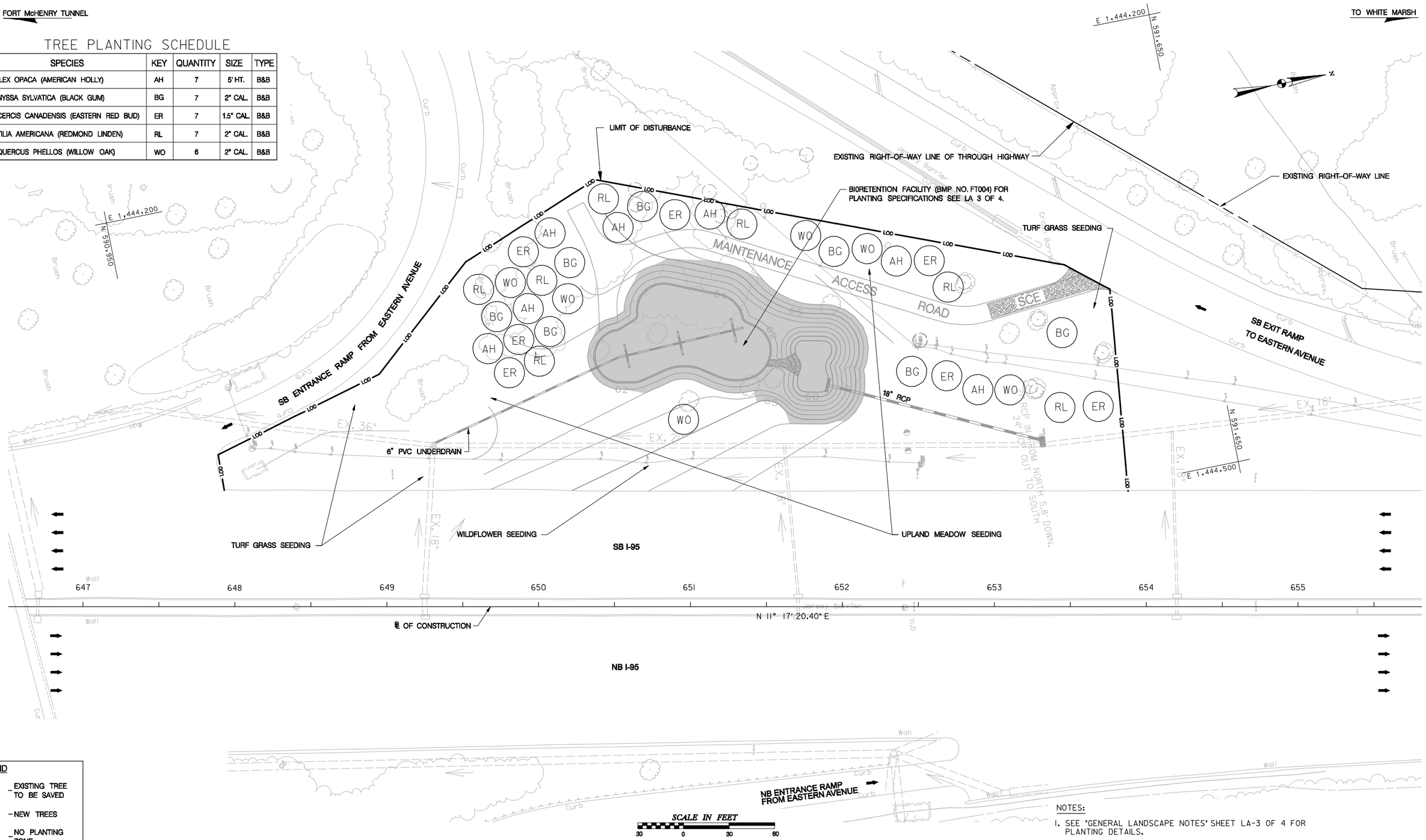

LEGEND

- EXISTING TREE TO BE SAVED
- NEW TREES
- NO PLANTING ZONE

SCALE IN FEET

30 0 30 60

NOTES:

1. SEE "GENERAL LANDSCAPE NOTES" SHEET LA-3 OF 4 FOR PLANTING DETAILS.

RK&K

81 MOSHER STREET | BALTIMORE, MD 21217

PH: (410) 728-2900 FAX: (410) 728-3160

Engineers Construction Managers Planners Scientists

www.rkk.com

MARYLAND TRANSPORTATION AUTHORITY

Engineering Division

ADDENDUMS & REVISIONS

NO.	DESCRIPTION	BY	DATE

I-95 FROM MORAVIA ROAD TO THE FORT McHENRY TUNNEL - PHASE 1 - SOUTHBOUND

I-95 (BALTIMORE CITY)

BIORETENTION AREA - PROPOSED LANDSCAPING PLAN

DESIGNED BY J.M.R.	DRAWN BY R.W.T.	CHECKED BY K.B.K.
CONST. REVIEW BY	DATE DECEMBER 2009	SCALE AS SHOWN

CONTRACT NO. FT 928-000-006

DRAWING NO. **LA-2 of 4**

SHEET NO. 183 OF 188

M:\projects\2005\05041_mdta\Task 13 - Moravia to FMT Design\CADD\Phase 1 - SB\Plans\pla-P002_plsb_195.dgn

Thursday, December 03, 2009 AT 11:39 AM

GENERAL LANDSCAPE NOTES

1. FOR GENERAL CONTRACT NOTES, CONTRACT RESTRICTIONS AND OTHER CONTRACT REQUIREMENTS AND COORDINATION WORK SEE GENERAL CONTRACT NOTES ON SHEET GN-01.
2. ALL PLANTS AND INSTALLATIONS SHALL BE IN ACCORDANCE WITH MARYLAND SHA STANDARD SPECIFICATIONS AND DETAILS.
3. ALL AREAS DESIGNATED FOR PLANTING SHALL BE CLEARED OF ANY PRE-EXISTING VEGETATION. SHRUBS, PERENNIALS AND ORNAMENTAL GRASSES SHALL BE PLANTED IN PERPARED BEDS AS PER SPECIFICATIONS.
4. NO TREES OR SHRUBS SHALL BE LOCATED IN CLEAR ZONES: TREES AND SHRUBS SHALL MAINTAIN THE FOLLOWING SETBACKS:
   - 10' FROM CENTERLINE of DRAINAGE SWALES
   - 7' FROM W BEAM AND FACE OF CURB
   - 10' FROM NOISE BARRIER WALLS
   - 5' FROM THE CENTERLINE OF ALL UNDERGROUND UTILITIES
   - 20' FROM THE CENTERLINE OF ALL OVERHEAD UTILITIES
5. LAYOUT OF PLANT MATERIAL MAY NEED TO BE ADJUSTED TO AVOID AS-BUILT OBSTACLES INCLUDING, BUT NOT LIMITED TO CONCRETE SLABS.
6. "MISS UTILITY" MUST BE CONTRACTED A MINIMUM OF 72 HOURS PRIOR TO PROCEEDING WITH ANY EXCAVATION FOR PLANT MATERIAL INSTALLATION. LAYOUT OF PLANT MATERIAL MAY NEED TO BE ADJUSTED BASED ON AS-BUILT UTILITY LOCATIONS.
7. NO PLANTS SHALL BE LOCATED DIRECTLY IN FRONT OF ANY ROADWAY SIGN SIGHT LINES.
8. REFER TO STANDARD SPECIFICATIONS FOR SUBSOIL REQUIREMENTS IN AREAS WHERE PLANTING IS PROPOSED AND WHERE PAVEMENT IS BEING REMOVED.
9. THE CONTRACTOR SHALL VERIFY THE LOCATION OF UTILITIES TO ENSURE NO CONFLICTS WITH PROPOSED TREE PLANTINGS.
10. ALL TREES ARE TO BE PLANTED AND ESTABLISHED AS PER SHA STANDARD SPECIFICATION SECTION 710. CENTER OF TREE TRUNKS SHALL BE PLACED A MINIMUM OF 15 FEET FROM THE EDGE OF 4:1 OF 3:1 GRADING FOR BIORETENTION FACILITY AND 10 FEET FROM PROPOSED PIPES AND EXISTING UTILITIES.
11. PLACE TOPSOIL ON DISTURBED AREAS OUTSIDE OF BIORETENTION FACILITY WITH 4:1 OR 3:1 SLOPES ACCORDING TO SHA STANDARDS SPECIFICATION SECTION 701.
12. SEE SHEET LA-2 AND LA-4 FOR UPLAND MEADOW SEEDING AREAS OUTSIDE OF BIORETENTION FACILITY. ESTABLISH UPLAND MEADOW SEEDING IN DISTURBED AREAS WITHIN LOD BUT GREATER THAN 30 FEET FROM SB I-95 AND EASTERN AVENUE INTERCHANGE RAMPS ACCORDING TO SHA STANDARD SPECIFICATION SECTION 707.
13. SEE LA-2 FOR TURFGRASS SEEDING AREAS ALONG SB I-95 AND EASTERN AVENUE INTERCHANGE RAMPS. ESTABLISH TURFGRASS SEEDING IN DISTURBED AREAS WITHIN LOD AND WITHIN 30 FEET OF SB I-95 AND EASTERN AVENUE INTERCHANGE RAMPS ACCORDING TO SHA STANDARDS SPECIFICATION 705.
14. ESTABLISH WILDFLOWER SEEDING IN DISTURBED AREAS BETWEEN BIORETENTION FACILITY AND SB I-95. PLACE ACCORDING TO SHA STANDARD SPECIFICATION SECTION 707.
15. REFER TO SHA STANDARD SPECIFICATION SECTION 712 FOR LANDSCAPE OVERSIGHT BY A LICENSED TREE EXPERT (LTE) FOR ALL TREES THAT MAY REQUIRE PRUNING. REFER TO SHA STANDARD SPECIFICATION SECTION 101 FOR CLEARING AND GRUBBING AND PROTECTION OF ALL TREES TO REMAIN.

BIORETENTION FACILITY PLANTING NOTES

1. PLANTING IN BIORETENTION FACILITY SHALL BE IN ACCORDANCE WITH THE FOLLOWING GUIDLINES:

   NO SHRUBS OR TREE PLANTING WITHIN 25' OF PERFORATED PIPE OR PRINCIPLE SPILLWAY STRUCTURES

   NO SHRUB OR TREE PLANTING WITHIN 15' OF TOE OF SLOPE OF DAM OR ON FILL EMBANKMENTS

PLANTING LIST						
QUANTITY	SYMBOL	SCIENTIFIC NAME	COMMON NAME	SIZE	CONDITION	SPACING
SHRUBS						
73	CA	CORNUS AMMOMUM	SIKKY DOGWOOD	24 IN. HT.	CONTAINER	4' OC
79	IV	ILEX VERTICILLATA	COMMON WINTERBERRY	24 IN. HT.	CONTAINER	4' OC
152	=TOTAL					
HERBACEOUS PLANTS						
517	JE	JUNCUS EFFUSUS	COMMON RUSH	#1 QUART	CONTAINER	18" OC
329	SC	SCIRPUS CYPERINUS	WOOLGRASS	#1 QUART	CONTAINER	18" OC
353	EM	EUPATORIUM MACULATUM	SPOTTED JOE PYE WEED	#1 QUART	CONTAINER	18" OC
316	PV	PANICUM VIRGATUM	SWITCHGRASS	#1 QUART	CONTAINER	24" OC
1515	=TOTAL					
SEED						
UPLAND MEDADOW		524 S.Y.				

PLANT LEGEND

- UPLAND MEADOW SEED MIX
- SHRUBS
- HERBACEOUS

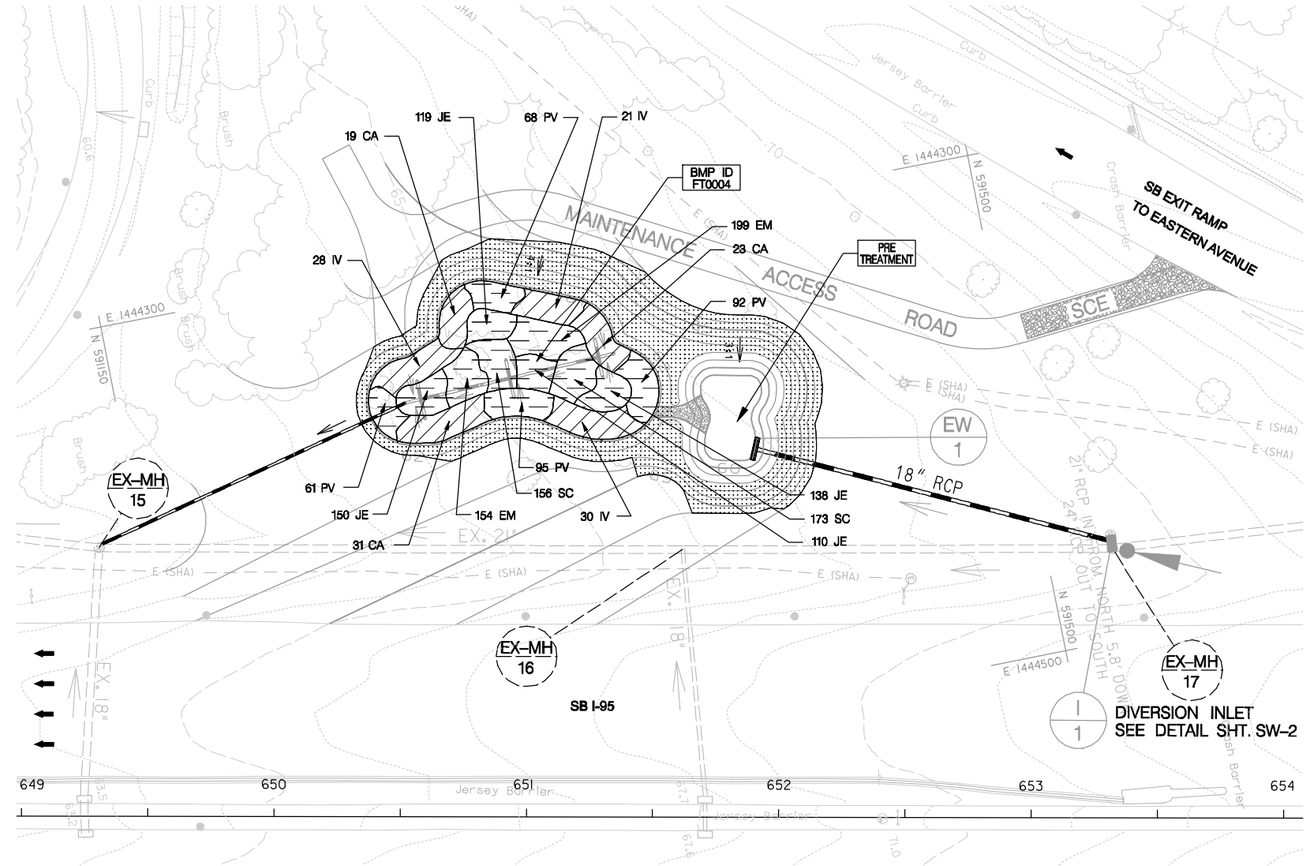

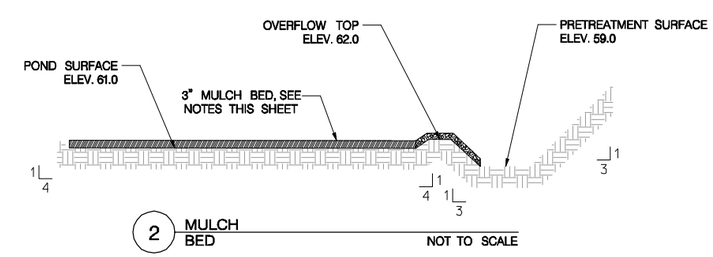

SCALE IN FEET
30 0 30 60

RK&K
81 MOSHER STREET | BALTIMORE, MD 21217
PH: (410) 728-2900 FAX: (410) 728-3160
Engineers Construction Managers Planners Scientists
www.rkk.com

MARYLAND TRANSPORTATION AUTHORITY
Engineering Division

ADDENDUMS & REVISIONS			
NO.	DESCRIPTION	BY	DATE

I-95 FROM MORAVIA ROAD TO THE FORT McHENRY TUNNEL - PHASE 1 - SOUTHBOUND
I-95 (BALTIMORE CITY)
BIORETENTION LANDSCAPING FOR BMP NO. FT0004

DESIGNED BY DRB	DRAWN BY VMS	CHECKED BY DRB
CONST. REVIEW BY -	DATE DECEMBER 2009	SCALE AS SHOWN

CONTRACT NO. FT 928-000-006
DRAWING NO. LA-3 of 4
SHEET NO. 184 OF 188

M:\projects\2005\05041_mdta\Task 13 - Moravia to FMT Design\CADD\Phase I - SB\Plans\pLD-SBI03_I95.dgn
Thursday, December 03, 2009 AT 12:01 PM

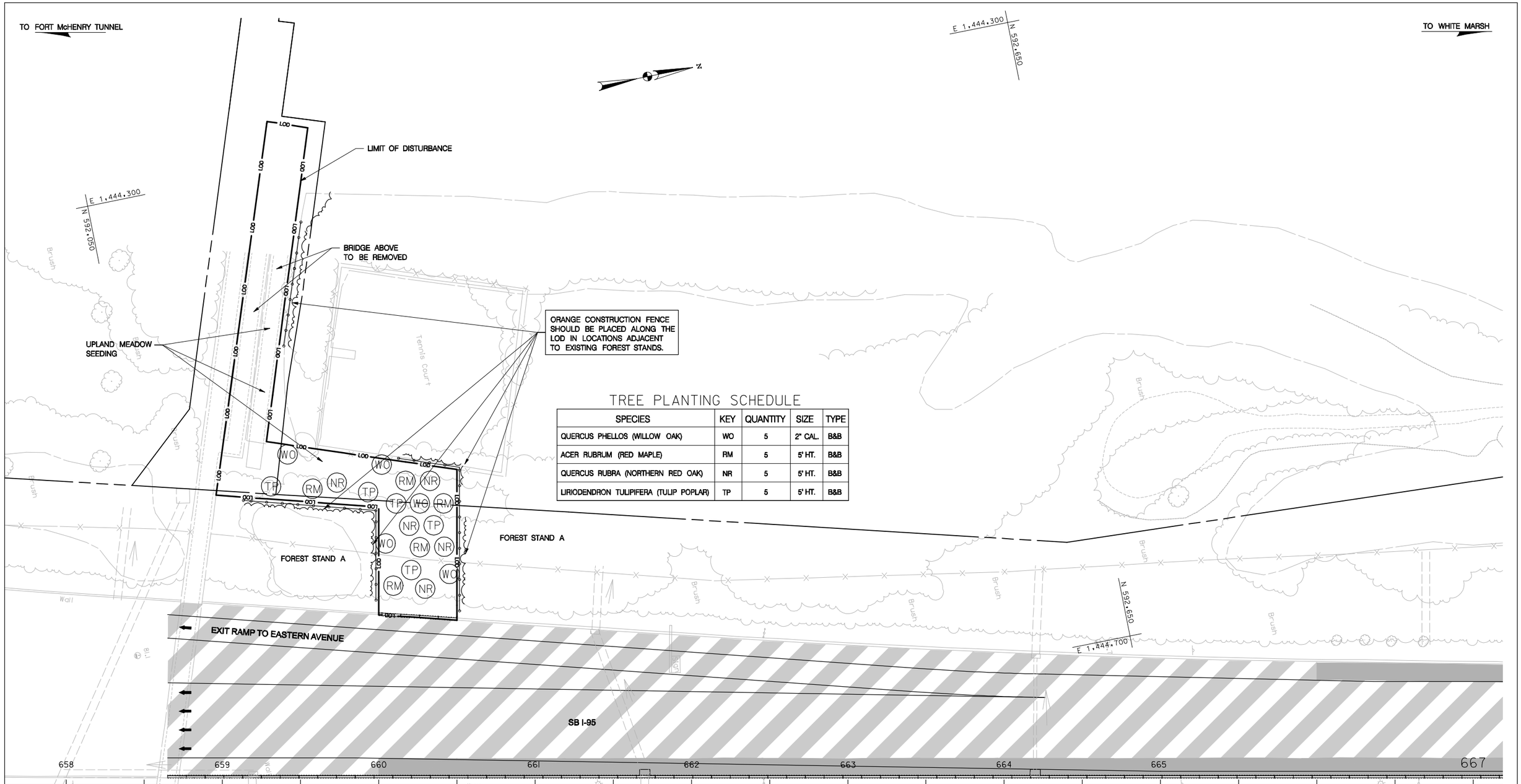

TREE PLANTING SCHEDULE

SPECIES	KEY	QUANTITY	SIZE	TYPE
QUERCUS PHELLOS (WILLOW OAK)	WO	5	2" CAL.	B&B
ACER RUBRUM (RED MAPLE)	RM	5	5' HT.	B&B
QUERCUS RUBRA (NORTHERN RED OAK)	NR	5	5' HT.	B&B
LIRIODENDRON TULIPIFERA (TULIP POPLAR)	TP	5	5' HT.	B&B

LEGEND

- EXISTING TREELINE
- PROPOSED TREELINE
- NEW TREES

SCALE IN FEET

30 0 30 60

NOTES:

1. SEE "GENERAL LANDSCAPE NOTES" SHEET LA-3 OF 4 FOR PLANTING DETAILS.

RK&K
81 MOSHER STREET | BALTIMORE, MD 21217
PH: (410) 728-2900 FAX: (410) 728-3160
Engineers Construction Managers Planners Scientists
www.rkk.com

MARYLAND TRANSPORTATION AUTHORITY
Engineering Division

ADDENDUMS & REVISIONS

NO.	DESCRIPTION	BY	DATE

I-95 FROM MORAVIA ROAD TO THE FORT McHENRY TUNNEL - PHASE 1 - SOUTHBOUND

I-95 (BALTIMORE CITY)

PEDESTRIAN RAMP REMOVAL AREA - PROPOSED LANDSCAPING PLAN

DESIGNED BY J.M.R. | DRAWN BY R.W.T. | CHECKED BY K.B.K.
CONST. REVIEW BY | DATE DECEMBER 2009 | SCALE AS SHOWN

CONTRACT NO. FT 928-000-006
DRAWING NO. LA-4 of 4
SHEET NO. 185 OF 188

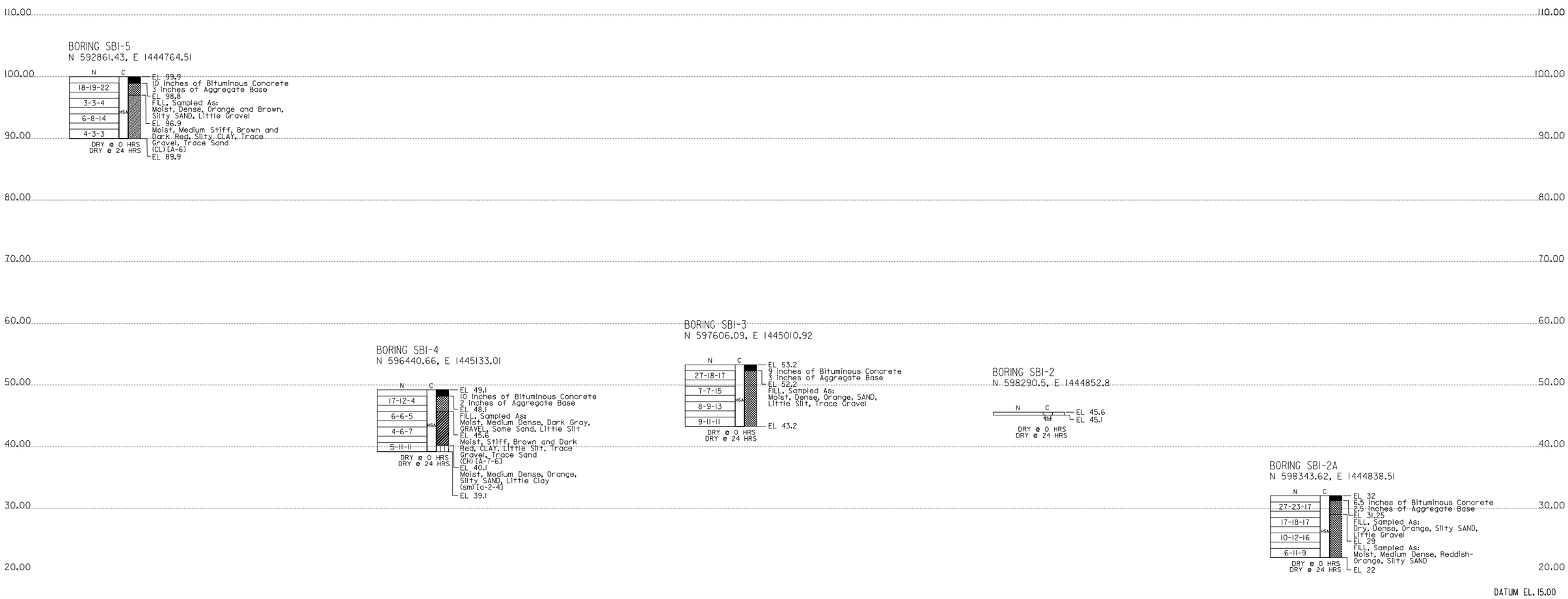

NOTES:

1. THE SOIL BORINGS WERE PERFORMED IN AUGUST 2008, BY E2CR.
2. THE SOIL SYMBOLS REFLECT ONLY THE MAJOR SOIL CONSTITUENT, FOR MORE COMPLETE SOIL CHARACTERISTICS REFER TO THE SOIL DESCRIPTIVE TEXT.
3. THE FIELD BORING LOGS RECORD SAMPLE SPOON RECOVERY. THE LOGS ARE AVAILABLE UPON REQUEST.
4. N = BLOWS ON A 2 INCH OD SAMPLING SPOON BY 140 LB. DRIVE-WEIGHT FALLING 30 INCHES INDICATING SUCCESSIVE 6 INCH INCREMENTS OF PENETRATION INLIEU OF BLOWS PER FOOT.
5. BORINGS AND SAMPLINGS CONFORM TO AASHTO DESIGNATIONS T-206, T-225 AND T-306.
6. THE SOIL HAS BEEN CLASSIFIED VISUALLY ACCORDING TO ASTM D 2488 AND AASHTO M 145 BY RK&K GEOLOGIST OR ENGINEER.
7. FOR A SUMMARY OF LABORATORY TEST DATA REFER TO GEOTECHNICAL ENGINEERING REPORT.
8. FOR BORING LOCATIONS SEE DRAWING NO. PS-1 THROUGH PS-7.

USCS SOIL KEY

GW	SW	ML	OL
GP	SP	MH	OH
GM	SM	CL	FILL
GC	SC	CH	Decomposed Rock

EXAMPLE SPT PROBE

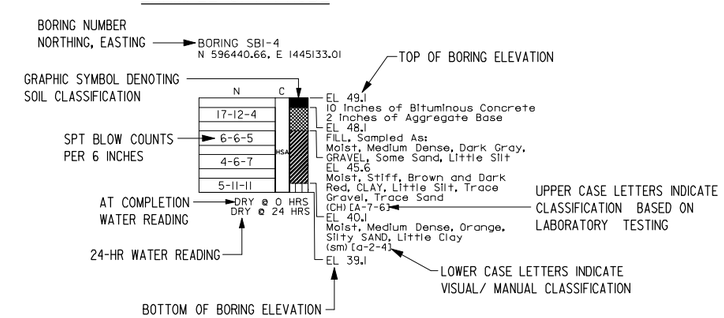

RK&K
81 MOSHER STREET | BALTIMORE, MD 21217
PH: (410) 728-2900 FAX: (410) 728-3160
Engineers Construction Managers Planners Scientists
www.rkk.com

MARYLAND TRANSPORTATION AUTHORITY
Engineering Division

ADDENDUMS & REVISIONS			
NO.	DESCRIPTION	BY	DATE

I-95 FROM MORAVIA ROAD TO THE FORT McHENRY TUNNEL - PHASE 1 - SOUTHBOUND

I-95 (BALTIMORE CITY)

BORING & DRIVE TESTS

DESIGNED BY G.K.G.	DRAWN BY K.D.T.	CHECKED BY E.M.K.
CONST. REVIEW BY	DATE DECEMBER 2009	SCALE 1/8"= 1'-0"

CONTRACT NO. FT 928-000-006

DRAWING NO. **SO-1 of 2**

SHEET NO. 186 OF 188

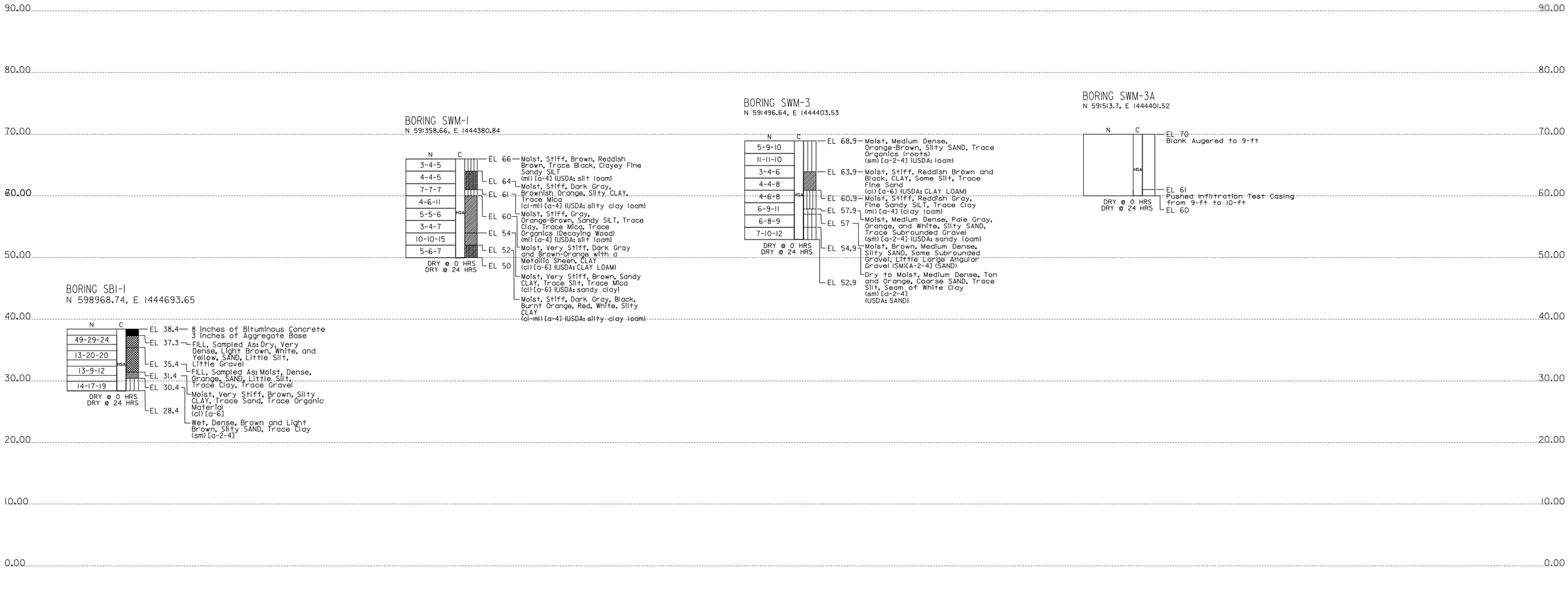

NOTES:

1. FOR BORING NOTES AND INFORMATION SEE DWG. NO. SO-1 OF 2.
2. FOR BORING LOCATIONS SHEET DWG. NO. PS-1 THROUGH PS-7.

RK&K
81 MOSHER STREET | BALTIMORE, MD 21217
PH: (410) 728-2900 FAX: (410) 728-3160
Engineers Construction Managers Planners Scientists
www.rkk.com

MARYLAND TRANSPORTATION AUTHORITY
Engineering Division

ADDENDUMS & REVISIONS			
NO.	DESCRIPTION	BY	DATE

I-95 FROM MORAVIA ROAD TO THE FORT McHENRY TUNNEL - PHASE 1 - SOUTHBOUND

I-95 (BALTIMORE CITY)

BORING & DRIVE TESTS

DESIGNED BY G.K.G.	DRAWN BY K.D.T.	CHECKED BY E.M.K.
CONST. REVIEW BY	DATE DECEMBER 2009	SCALE 1/8" = 1'-0"

CONTRACT NO. FT 928-000-006

DRAWING NO. **SO-2 of 2**

SHEET NO. 187 OF 188

GRADING TABLE

LOCATION		EXCAVATION												EMBANKMENT FILL	COMMENTS
STATIONS		CLASS 1 AND 2									CLASS 1A	EROSION & SEDIMENT		FROM X-SECTIONS	
		CUT FROM XSECTS	TOPSOIL CUT	TOPSOIL FILL	ROOTMAT CUT	ROOTMAT FILL	TOTAL	SUITABLE FOR EMBANK.	SHRINK/SWELL FACTOR (85%)	AVAIL. FOR EMBANK.		ORIGINAL EXCAVATION	CLEAN-OUT EXCAVATION		
FROM ①	TO ②	③ C.Y.	④ C.Y.	⑤ C.Y.	⑥ C.Y.	⑦ C.Y.	⑧ C.Y.	⑨ C.Y.	⑩ C.Y.	⑪ C.Y.	C.Y.	⑫ C.Y.	⑬ C.Y.	⑭ C.Y.	
I-95		6,325	0	0	0	0	6,325	6,325	85%	5,376	1,750	0	0	100	
BIORETENTION FACILITY		2,500	0	0	0	0	2,500	2,500	85%	2,125	0	0	0	0	
TOTALS		8,825	0	0	0	0	8,825	8,825		7,501	1,750	0	0	100	

SUMMARY OF EARTHWORK

CLASS '1 AND 2' EXCAVATION

CUT FROM CROSS-SECTIONS ③ — — — — — — — — — — — — 8,825 C.Y.

TOTAL CLASS '1' AND '2' EXCAVATION ⑪ AVAILABLE FOR EMBANKMENT — — — — — — — 7,501 C.Y.

EXCAVATION AVAILABLE FOR EMBANKMENT

TOTAL CLASS '1' AND '2' EXCAVATION ⑪ AVAILABLE FOR EMBANKMENT — — — — 7,501 C.Y.

TOTAL EXCAVATION AVAILABLE FOR EMBANKMENT — — — — — — — — — — +0 C.Y.

EMBANKMENT REQUIRED

FILL FROM CROSS-SECTIONS ⑭ — — — — — — — — — — — — 100 C.Y.

TOTAL EMBANKMENT REQUIRED — — — — — — — — — — 100 C.Y.

MINUS TOTAL EXCAVATION (AVAILABLE FOR EMBANKMENT) — — — - 7,501 C.Y.

BORROW REQUIRED — — — — — — — — — — — — — — 0 C.Y.

BORROW (15%) DENSIFICATION — — — — — — — — — — — — 0 C.Y.

TOTAL BORROW REQUIRED — — — — — — — — — — — 0 C.Y.

PROPOSAL QUANTITIES

CLASS 1 EXCAVATION — — — — — — — — — — — — — — — — 4,725 C.Y.

CLASS 2 EXCAVATION — — — — — — — — — — — — — — — — 4,100 C.Y.

COMMON BORROW — — — — — — — — — — — — — — — — — — 0 C.Y.

EROSION AND SEDIMENT CONTROL ORIGINAL EXCAVATION — — — — 0 C.Y.

EROSION AND SEDIMENT CONTROL CLEANOUT EXCAVATION — — — — 0 C.Y.

CLASS 1A EXCAVATION — — — — — — — — — — — — — — — 1,750 C.Y.

MODIFIED BORROW — — — — — — — — — — — — — — — — — 0 C.Y.

SCALE IN FEET

50 0 50 100

RK&K
81 MOSHER STREET | BALTIMORE, MD 21217
PH: (410) 728-2900 FAX: (410) 728-3160
Engineers Construction Managers Planners Scientists
www.rkk.com

MARYLAND TRANSPORTATION AUTHORITY
Engineering Division

ADDENDUMS & REVISIONS			
NO.	DESCRIPTION	BY	DATE

I-95 FROM MORAVIA ROAD TO THE FORT McHENRY TUNNEL - PHASE 1 - SOUTHBOUND

I-95 (BALTIMORE CITY)

GRADING TABLE / SUMMARY OF EARTHWORK

DESIGNED BY A.J.G. | DRAWN BY R.W.T. | CHECKED BY J.M.R.

CONST. REVIEW BY | DATE DECEMBER 2009 | SCALE AS SHOWN

CONTRACT NO. FT 928-000-006

DRAWING NO. **GT-01**

SHEET NO. 188 OF 188