MARYLAND TRANSPORTATION AUTHORITY

Maryland Transportation Authority

KB 2250-000-002

FRANCIS SCOTT KEY BRIDGE (FSK) (I-695)

LIGHT POLE AND LUMINAIRE REPLACEMENT

ANNE ARUNDEL COUNTY, BALTIMORE CITY AND BALTIMORE COUNTY

CONTRACT NO.: KB 2250-000-002

INDEX OF SHEETS

DRAWING NO.	DESCRIPTION
E-1	BRIDGE PLAN AND ELEVATION SHEET 1
E-2	BRIDGE PLAN AND ELEVATION SHEET 2
E-3	BRIDGE PLAN AND ELEVATION SHEET 3
E-4	LIGHTING WIRING DIAGRAM
S-1	STRUCTURAL DETAILS AT STEEL PARAPET
S-2	STRUCTURAL CONCRETE PARAPET

REFERENCE DRAWINGS:

FOR THE CONVENIENCE, ASSISTANCE AND INFORMATION OF PROSPECTIVE BIDDERS, A SET OF PLANS FOR THE EXISTING PERTINENT STRUCTURES ARE INCLUDED WITH THIS CONTRACT. THESE REFERENCE DRAWINGS DO NOT REPRESENT WORK TO BE PERFORMED UNDER THIS CONTRACT. THE AUTHORITY ASSUMES NO RESPONSIBILITY FOR THE ACCURACY OF THESE DRAWINGS.

HORIZONTAL AND VERTICAL CONTROLS:

"PLANS ARE ORIENTED TO CONFORM TO THE MARYLAND GRID SYSTEM (NAD 83/91) ALL ELEVATIONS ARE BASED ON NATIONAL GEODETIC SURVEYS (N.S.G.) MEAN SEA LEVEL DATUM NAVD 1988".

REFERENCE DRAWINGS

CONTRACT NO.	DWG. NO.	DESCRIPTION
OT-12	A-18 TO A-19, A-20	PARAPET, ROADWAY, & EXP. DAM DETAILS
OT-14	1-37A, NL-1	LIGHTING PLANS & DETAILS
OT 12 & 13	1 & 2 OF 2	LIGHTING MOUNTING BRACKET & PULL BOX DETAILS & SCHEDULES

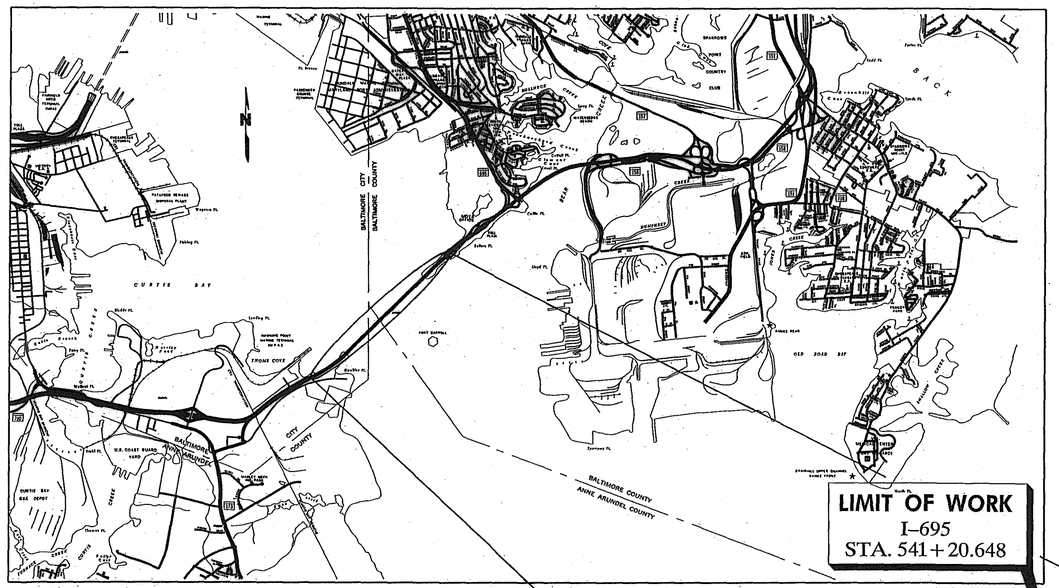

LOCATION MAP

NOT TO SCALE

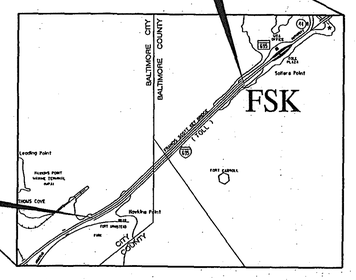

SPECIFICATIONS

The Specifications for all work on this project shall be State Highway Adminstration's Standard Specifications entitled: "Standard Specifications For Construction And Materials," dated July 2008 and all additions and/or revisions thereto, and other Specifications in the Special Provisions.

STANDARDS

Standards for this contract will be those of the State Highway Administration. It will be the responsibility of the Contractor that the Standards in his possession are the latest S.H.A. Standards as of the date of advertisement.

EROSION AND SEDIMENT CONTROL

Erosion and Sediment control measures shall be applied to all erodible materials exposed by any activity on the project. Erosion and sediment control measures shall be coordinated with the construction at permanent drainage facilities such as pipes, culverts, headwalls, ditch paving, flumes, etc. which shall be constructed prior to or as soon as practicable after the grading operation is begun. The Contractor shall also comply with all provisions of Section 308 of the Specifications.

EROSION AND SEDIMENT CONTROL CERTIFICATION

"We hereby certify that any clearing, grading, construction and/or development will be done pursuant to this plan and that any responsible personnel involved in the construction project will have a certificate of attendance at a Maryland Department of the Environment approved training program for the control of sediment and erosion before beginning this project."

UTILITIES

MdTA notification to Mr. Kip McEnzie (MdTA utilities coordinator) at 410-537-7637 shall be given 72 hours in advance of working in the area of the Specific Utility.

EXISTING STRUCTURES:

All dimensions affected by the geometrics, and/or locations of the existing structure shall be checked in the field by the contractor, before any construction is done, and before any material is ordered or fabricated. It shall be the responsibility of the contractor to supply the engineer with all field dimensions required to check detail drawings. The ± marks shown with dimensions do not indicate any degree of precision. These marks (±) indicate existing dimensions that may vary and do require field verification by the contractor.

DCI

DANIEL CONSULTANTS, INC.

CONSULTING ENGINEERS AND PLANNERS

8950 Rt. 108 E., Suite 229 Columbia, MD. 21045

Phone: 410-995-0090 Fax: 410-992-7038

STATE OF MARYLAND LAWRENCE R. GREENE 27026 PROFESSIONAL ENGINEER

PROFESSIONAL CERTIFICATION: I HEREBY CERTIFY THAT THESE DOCUMENTS WERE PREPARED OR APPROVED BY ME, AND THAT I AM A DULY LICENSED PROFESSIONAL ENGINEER UNDER THE LAWS OF THE STATE OF MARYLAND.

LICENSE NO. 27026 EXPIRATION DATE: 01-28-2012

MARYLAND TRANSPORTATION AUTHORITY

RECOMMENDED FOR APPROVAL DIRECTOR, ENGINEERING DIVISION	5/4/10 DATE
APPROVED CHIEF ENGINEER	5/24/10 DATE
APPROVED EXECUTIVE SECRETARY	5/24/10 DATE

H:\PROJECTS\Structs\04-01-17 FSK Bridge Lighting\DGN 1-15-10 Rev Larry\TITLE SHEET 6-08.dgn
Tuesday, May 04, 2010 AT 10:09 AM

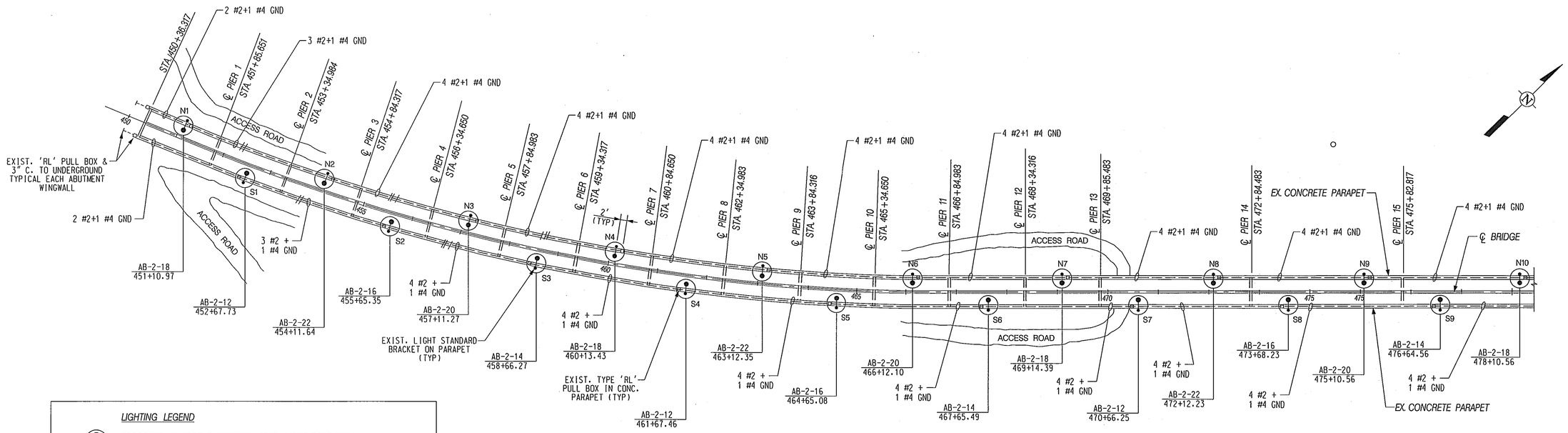

PLAN – FSK BRIDGE

SCALE: 1" = 100'

100 0 100 200

SCALE: 1" = 100'

LIGHTING LEGEND

- PROPOSED 40-FOOT GALVANIZED STEEL LIGHT POLE WITH 2-FOOT BRACKET ARM AND A 120 LEDS LUMINAIRE
- EXISTING JUNCTION BOX TO BE REUSED
- EXISTING ELECTRICAL MANHOLE TO BE UTILIZED
- EXISTING LIGHTING CONTROL AND DISTRIBUTION CABINET TO BE UTILIZED
- EXISTING 4-INCH PVC CONDUIT SCHEDULE 80 – BORED TO BE UTILIZED
- EXISTING 3" CONDUIT WITHIN PARAPET WALL TO BE UTILIZED
- EXISTING 2" CONDUIT IN MAIN SPAN TO BE UTILIZED
- N1/S1 POLE NUMBER ON NORTH OR SOUTH SIDE OF BRIDGE
- ANCHOR BOLT LIGHT POLE BASE
- 2 FOOT BRACKET ARM
- AB-2-16 CIRCUIT NUMBER
- 473+68.23 ROADWAY STATION NUMBER OF LIGHT POLE
- FRONT OF PROPOSED LIGHT POLE
- REAR OF PROPOSED LIGHT POLE
- EXISTING CONCRETE PARAPET

NOTES:

1. 2 – #10 AWG WIRES + 1 #10 GND SHALL BE INSTALLED FROM EXISTING JUNCTION BOXES TO EACH LUMINAIRE WITHIN NEW 1 1/4" RIGID METALLIC CONDUIT EXTENSION FROM JUNCTION BOX TO LIGHT POLE BASE.
2. MILLERBERND #16-XSDM6WS-2-383-CC-MH LIGHT POLE (OR APPROVED EQUAL) TO BE USED.
3. ROADWAY LIGHTING WIRING SHALL CONFORM TO MARYLAND STATE HIGHWAY ADMINISTRATION STANDARD NO. 807.01 FOR A ROADWAY LIGHTING CONTROL CABINET 277/480 VOLT SYSTEM 277 VOLT LUMINAIRE OPERATION.
4. NEW CONNECTOR KITS SHALL BE PROVIDED AT ALL NEW LIGHT POLES IN ACCORDANCE WITH MARYLAND STATE HIGHWAY ADMINISTRATION STANDARD NO. 810.04 FOR ROADWAY LIGHTING 277/480 VOLT SYSTEM 277 VOLT POLE CONNECTIONS.
5. ALL ELECTRICAL ITEMS PROVIDED WITH THIS PROJECT SHALL BE TESTED IN ACCORDANCE WITH MSHA SECTION 820 OF THE STANDARD SPECIFICATIONS FOR CONSTRUCTION AND MATERIALS.
6. ALL ELECTRICAL CABLES, WIRES, AND CONNECTORS SHALL BE IN ACCORDANCE WITH MSHA SECTION 810 OF THE STANDARD SPECIFICATIONS FOR CONSTRUCTION AND MATERIALS.
7. THE REMOVAL OF THE EXISTING LIGHT POLES SHALL BE IN ACCORDANCE WITH MSHA SECTION 823 OF THE STANDARD SPECIFICATIONS FOR CONSTRUCTION AND MATERIALS. THE REMOVAL OF THE LIGHT POLES INCLUDES THE REMOVAL OF BRACKETS.
8. EXISTING WIRING AND LIGHT POLES WILL NEED TO BE REPLACED IN SECTIONS WITH NEW WIRING AND LIGHT POLES SO THAT LIGHTING IS MAINTAINED DURING EVENING HOURS.
9. THE REQUIRED MAINTENANCE OF TRAFFIC TO INSTALL THE WIRING AND LIGHT POLES ON THE FSK BRIDGE SHALL BE IN ACCORDANCE WITH MSHA SECTION 104 OF THE STANDARD SPECIFICATIONS FOR CONSTRUCTION AND MATERIALS. SPECIFICALLY, STANDARD NO. MD 104.05-07.
10. THE REPLACEMENT OF LIGHTING STRUCTURES SHALL CONFORM TO SHA STANDARD 950.07
11. THE ELECTRIC CABLE AND WIRE CONNECTOR SHALL CONFORM TO SHA STANDARD 950.14
12. THE REMOVAL OF EXISTING WIRING SHALL BE CONSIDERED AN INCIDENTAL COST TO THE INSTALLATION OF NEW WIRING ON ALL PLAN SHEETS.
13. SPARE PART PACKAGE IN ESTIMATE INCLUDES LIGHT POLE, LED LUMINAIRE, AND SUFFICIENT #10 AWG CABLING TO INSTALL/REPLACE UP TO 7 ADDITIONAL LIGHT POLES.

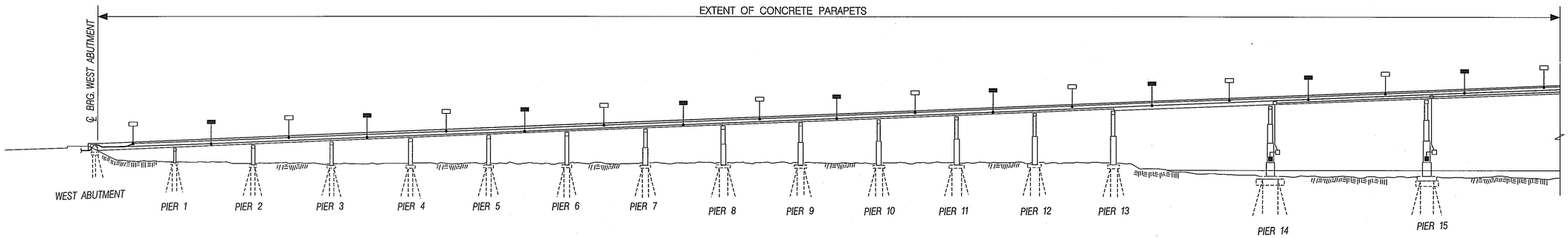

ELEVATION – FSK BRIDGE

SCALE: 1" = 100'

100 0 100 200

SCALE: 1" = 100'

DGI
DANIEL CONSULTANTS, INC.
CONSULTING ENGINEERS AND PLANNERS
8950 Rt. 108 E., Suite 229 Columbia, MD. 21045
Phone: 410-995-0090 Fax: 410-992-7038

Maryland Transportation Authority
Engineering Division

ADDENDUMS & REVISIONS			
NO.	DESCRIPTION	BY	DATE

LIGHT POLE AND LUMINAIRE REPLACEMENT
FRANCIS SCOTT KEY BRIDGE (FSK) (I-695)
BRIDGE PLAN AND ELEVATION SHEET 1

DESIGNED BY LHG	DRAWN BY TTV	CHECKED BY MD	
CONST. REVIEW BY	DATE JANUARY 2010	SCALE AS SHOWN	

CONTRACT NO. KB 2250-000-002
DRAWING NO. E-1
SHEET NO. 1 OF 6

H:\PROJECTS\Struct\04-101-17 FSK Bridge Lighting\DGN 1-15-10 Rev Lam\E-1.dgn
Monday, January 18, 2010 AT 03:38 PM

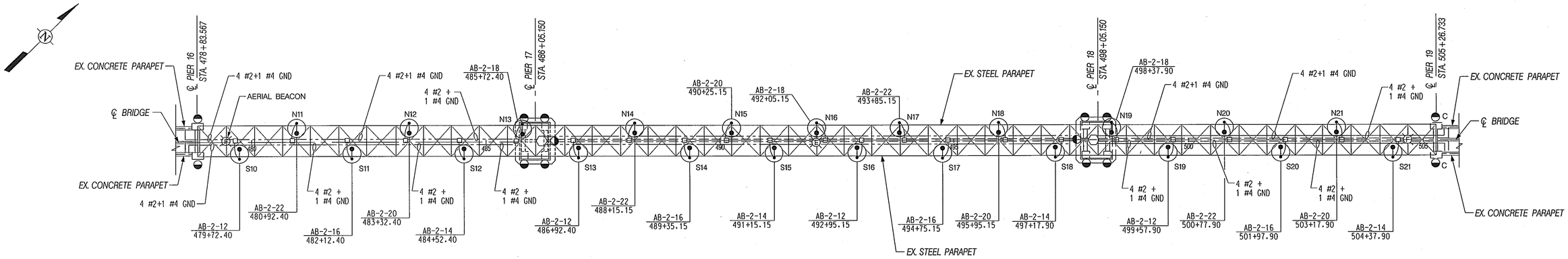

PLAN – FSK BRIDGE

SCALE: 1"=100'

100 0 100 200

SCALE: 1"=100'

LIGHTING LEGEND

- PROPOSED 40-FOOT GALVANIZED STEEL LIGHT POLE WITH 2-FOOT BRACKET ARM AND A 120 LEDS LUMINAIRE
- EXISTING JUNCTION BOX TO BE REUSED
- EXISTING ELECTRICAL MANHOLE TO BE UTILIZED
- EXISTING LIGHTING CONTROL AND DISTRIBUTION CABINET TO BE UTILIZED
- EXISTING 4-INCH PVC CONDUIT SCHEDULE 80 – BORED TO BE UTILIZED
- EXISTING 3" CONDUIT WITHIN PARAPET WALL TO BE UTILIZED
- EXISTING 2" CONDUIT IN MAIN SPAN TO BE UTILIZED
- N1/S1 — POLE NUMBER ON NORTH OR SOUTH SIDE OF BRIDGE
- ANCHOR BOLT LIGHT POLE BASE
- 2 FOOT BRACKET ARM
- AB-2-16 — CIRCUIT NUMBER
- 473+68.23 — ROADWAY STATION NUMBER OF LIGHT POLE
- FRONT OF PROPOSED LIGHT POLE
- REAR OF PROPOSED LIGHT POLE
- EXISTING CONCRETE PARAPET

NOTES:

1. SOME FOG SIGNALS OR NAVIGATIONAL LIGHTS ARE SHOWN FOR INFORMATIONAL PURPOSES. FOG SIGNALS AND NAVIGATIONAL LIGHTS AND ASSOCIATED WIRING ARE NOT BEING REPLACED.
2. EXISTING 1" RIGID CONDUIT WILL BE USED FROM ROADWAY LIGHTING PULL BOX BENEATH ROADWAY SURFACE TO LIGHT POLE BASE. 2 #10 AWG WIRES + 1 #10 AND WILL BE NEWLY INSTALLED WITHIN EXISTING CONDUIT FROM ROADWAY LIGHTING PULL BOX TO NEW LED LUMINAIRE.
3. NEW WIRING FROM LIGHTING CONTROL CABINET AT EAST ABUTMENT WILL TERMINATE AT LIGHTING CONTACTOR BOX AT PIER 18. NEW WIRING SHOULD BE CLEARLY MARKED WITH APPROPRIATE CIRCUIT NUMBER.
4. EXISTING WIRING AT MAIN SPAN BETWEEN PIER 17 AND 18 SHALL BE MAINTAINED.
5. NEW WIRING FROM WEST ABUTMENT WILL TERMINATE AT PIER 17. NEW WIRING SHALL BE SPLICED WITH EXISTING WIRING AT PIER 17 JUNCTION BOX.

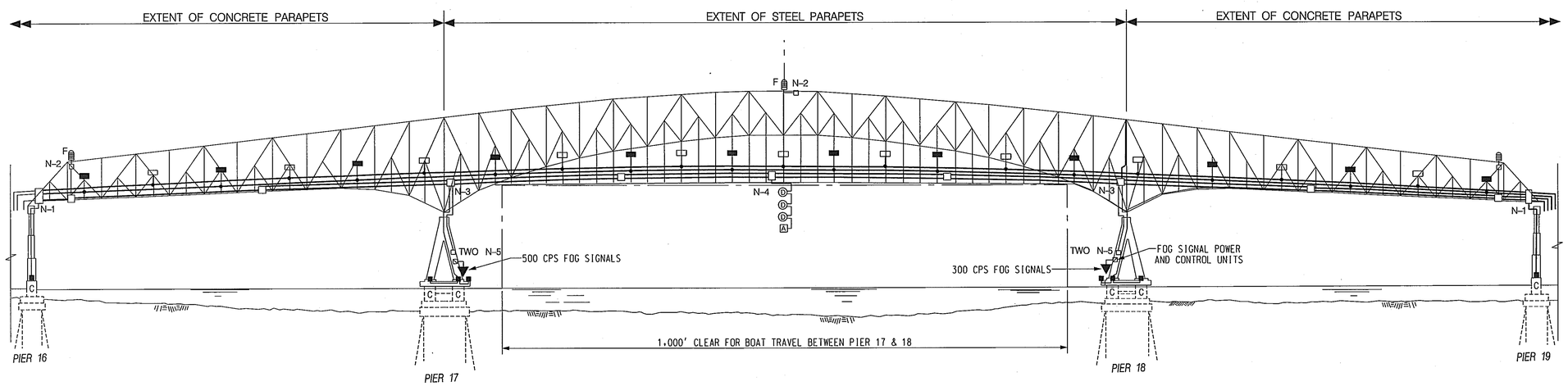

ELEVATION – FSK BRIDGE

SCALE: 1"=100'

100 0 100 200

SCALE: 1"=100'

DCI
DANIEL CONSULTANTS, INC.
CONSULTING ENGINEERS AND PLANNERS
8950 Rt. 108 E., Suite 229 Columbia, MD. 21045
Phone: 410-995-0090 Fax: 410-992-7038

Maryland Transportation Authority
Engineering Division

ADDENDUMS & REVISIONS			
NO.	DESCRIPTION	BY	DATE

LIGHT POLE AND LUMINAIRE REPLACEMENT

FRANCIS SCOTT KEY BRIDGE (FSK) (I-695)

BRIDGE PLAN AND ELEVATION SHEET 2

DESIGNED BY	DRAWN BY TTV	CHECKED BY MD	
CONST. REVIEW BY	DATE JANUARY 2010	SCALE AS SHOWN	

CONTRACT NO. KB 2250-000-002

DRAWING NO. E-2

SHEET NO. 2 OF 6

H:\PROJECTS\Structl\04-101-17 FSK Bridge Lighting\DGN 1-15-10 Rev Larry\E-2.dgn
Monday, January 18, 2010 AT 10:57 AM

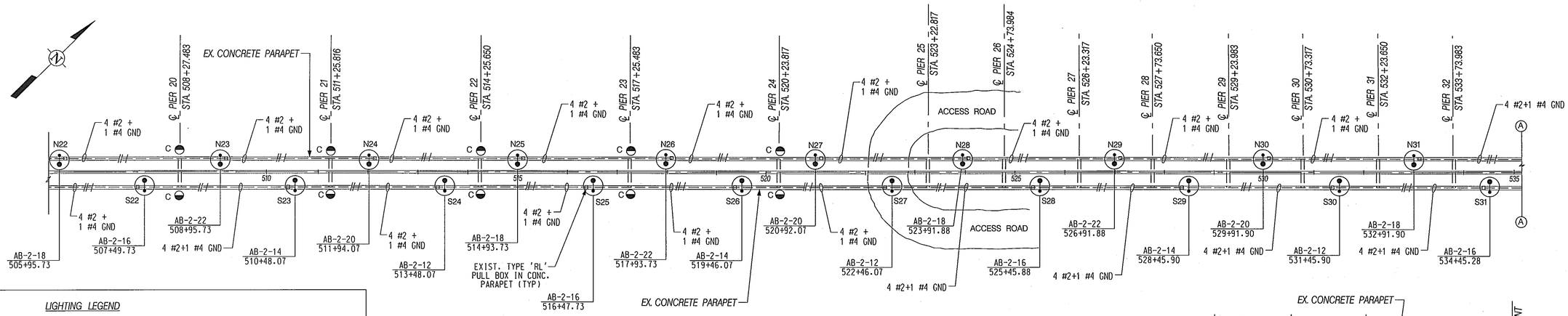

PLAN – FSK BRIDGE

SCALE: 1"=100'

100 0 100 200

SCALE: 1"=100'

LIGHTING LEGEND

- PROPOSED 40-FOOT GALVANIZED STEEL LIGHT POLE WITH 2-FOOT BRACKET ARM AND A 120 LEDS LUMINAIRE
- EXISTING JUNCTION BOX TO BE REUSED
- EXISTING ELECTRICAL MANHOLE TO BE UTILIZED
- EXISTING LIGHTING CONTROL AND DISTRIBUTION CABINET TO BE UTILIZED
- EXISTING 4-INCH PVC CONDUIT SCHEDULE 80 – BORED TO BE UTILIZED
- EXISTING 3" CONDUIT WITHIN PARAPET WALL TO BE UTILIZED
- EXISTING 2" CONDUIT IN MAIN SPAN TO BE UTILIZED
- N1/S1 POLE NUMBER ON NORTH OR SOUTH SIDE OF BRIDGE
- ANCHOR BOLT LIGHT POLE BASE
- 2 FOOT BRACKET ARM
- AB-2-16 CIRCUIT NUMBER
- 473+68.23 ROADWAY STATION NUMBER OF LIGHT POLE
- FRONT OF PROPOSED LIGHT POLE
- REAR OF PROPOSED LIGHT POLE
- EXISTING CONCRETE PARAPET

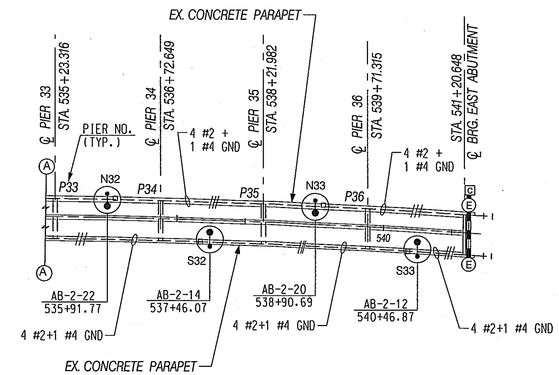

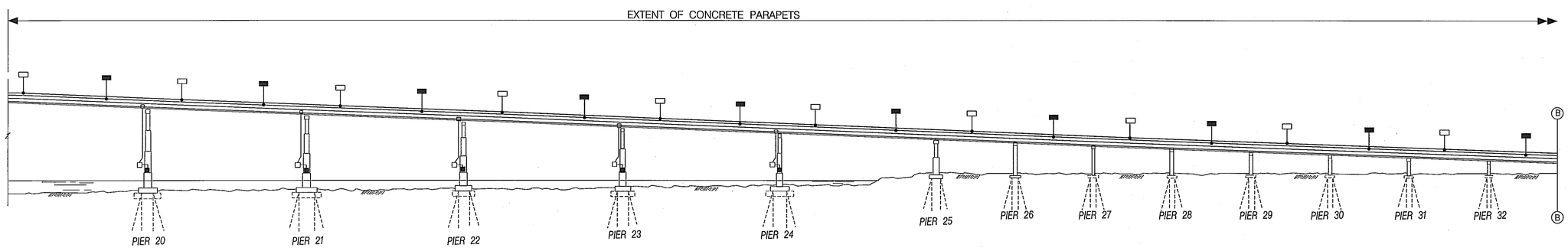

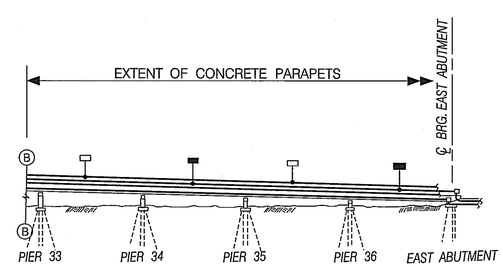

ELEVATION – FSK BRIDGE

SCALE: 1"=100'

100 0 100 200

SCALE: 1"=100'

NOTES:

1. 2 - #10 AWG WIRES + 1 #10 GND SHALL BE INSTALLED FROM EXISTING JUNCTION BOXES TO EACH LUMINAIRE WITHIN NEW 1 1/4" RIGID METALLIC CONDUIT EXTENSION FROM JUNCTION BOX TO LIGHT POLE BASE.
2. NEW WIRING AT EAST BRIDGE ABUTMENT SHALL BE PULLED THROUGH EXISTING ELECTRICAL MANHOLES INTO EXISTING LIGHTING CABINET JUST NORTH OF ROADWAY. EXISTING CIRCUITS 18, 20 & 22 WILL BE UTILIZED FOR LIGHTING ON NORTH SIDE OF BRIDGE AND EXISTING CIRCUITS 12, 14 & 16 WILL BE UTILIZED FOR LIGHTING ON SOUTH SIDE OF BRIDGE.

DCI
DANIEL CONSULTANTS, INC.
CONSULTING ENGINEERS AND PLANNERS
8950 Rt. 108 E., Suite 229 Columbia, MD. 21045
Phone: 410-995-0090 Fax: 410-992-7038

Maryland Transportation Authority
Engineering Division

ADDENDUMS & REVISIONS

NO.	DESCRIPTION	BY	DATE

LIGHT POLE AND LUMINAIRE REPLACEMENT

FRANCIS SCOTT KEY BRIDGE (FSK) (I-695)

BRIDGE PLAN AND ELEVATION SHEET 3

DESIGNED BY	DRAWN BY TTV	CHECKED BY MD
CONST. REVIEW BY	DATE JANUARY 2010	SCALE AS SHOWN

CONTRACT NO. KB 2250-000-002

DRAWING NO. E-3

SHEET NO. 3 OF 6

H:\PROJECTS\Stuart\04-101-17 FSK Bridge Lighting\DGN 1-15-10 Rev Larry\E-3.dgn
Monday, January 18, 2010 AT 10:00 AM

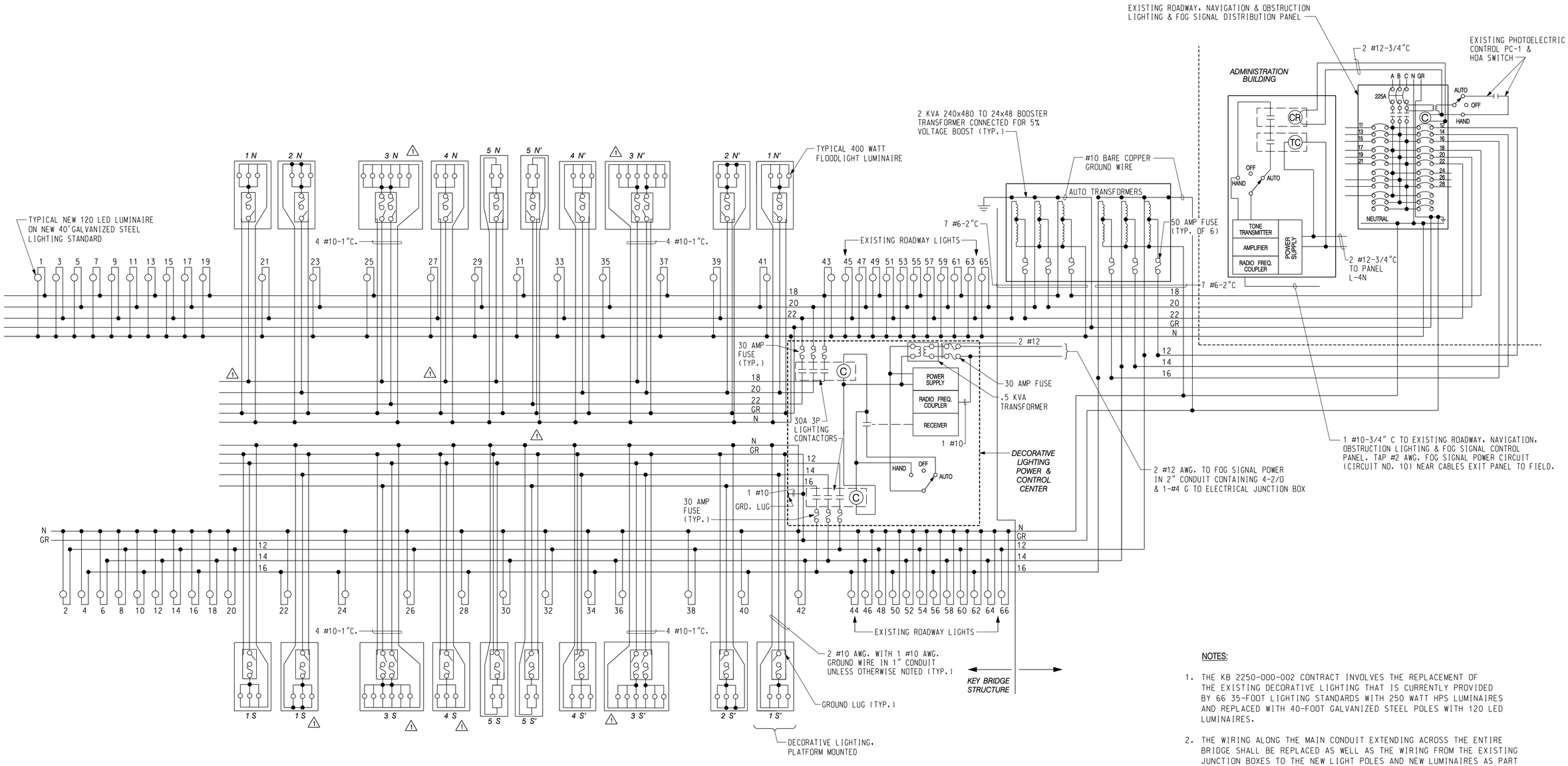

LIGHTING WIRING DIAGRAM

NOTES:

1. THE KB 2250-000-002 CONTRACT INVOLVES THE REPLACEMENT OF THE EXISTING DECORATIVE LIGHTING THAT IS CURRENTLY PROVIDED BY 66 35-FOOT LIGHTING STANDARDS WITH 250 WATT HPS LUMINAIRES AND REPLACED WITH 40-FOOT GALVANIZED STEEL POLES WITH 120 LED LUMINAIRES.

2. THE WIRING ALONG THE MAIN CONDUIT EXTENDING ACROSS THE ENTIRE BRIDGE SHALL BE REPLACED AS WELL AS THE WIRING FROM THE EXISTING JUNCTION BOXES TO THE NEW LIGHT POLES AND NEW LUMINAIRES AS PART OF THE KB 2250-000-002 CONTRACT.

3. WIRING, LIGHT POLES, AND LUMINAIRES OTHER THAN INDICATED IN NOTES #1 AND #2 ARE SHOWN FOR INFORMATIONAL PURPOSES AND WILL NOT BE REPLACED AS PART OF THE KB 2250-00-002 CONTRACT.

DCI
DANIEL CONSULTANTS, INC.
CONSULTING ENGINEERS AND PLANNERS
8950 Rt. 108 E., Suite 229 Columbia, MD. 21045
Phone: 410-995-0090 Fax: 410-992-7038

Maryland Transportation Authority
Engineering Division

ADDENDUMS & REVISIONS

NO.	DESCRIPTION	BY	DATE
1	GREINER ADDENDUM		6/1/90

LIGHT POLE AND LUMINAIRE REPLACEMENT
FRANCIS SCOTT KEY BRIDGE (FSK) (I-695)
LIGHTING WIRING DIAGRAM

CONTRACT NO. KB 2250-000-002
DRAWING NO. E-4

DESIGNED BY ____ DRAWN BY TTV CHECKED BY MD
CONST. REVIEW BY ____ DATE JANUARY 2010 SCALE AS SHOWN
SHEET NO. 4 OF 6

H:\PROJECTS\Struct\04-101-17 FSK Bridge Lighting\DGN 1-15-10 Rev Larry\E-4.dgn
Monday, January 18, 2010 AT 09:39 AM
H:\Proj\Struct\ 04-101-17 FSK bridge lighting /dgn 6-2009 Larry>> E-4.dgn

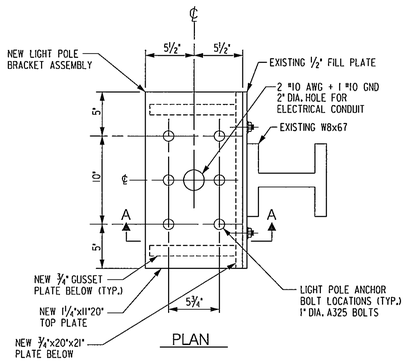

PLAN

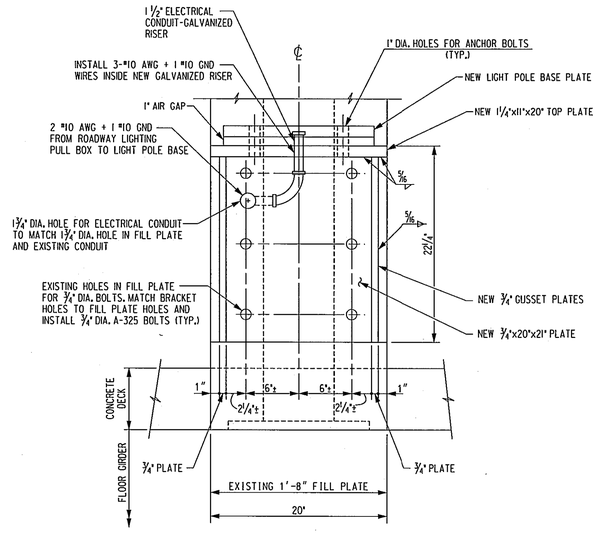

ELEVATION

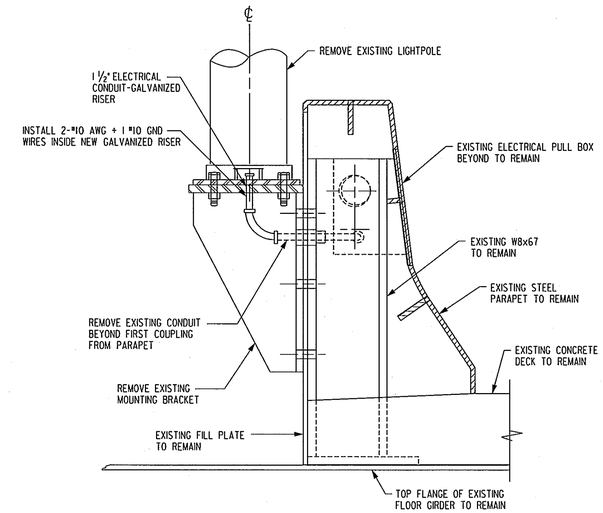

STEEL PARAPET MOUNTING BRACKET: EXISTING CONDITION

SCALE: 1½"=1'-0"

NOTE:

CONTRACTOR SHALL REMOVE AND DISPOSE OF EXISTING POLES AND BRACKETS.

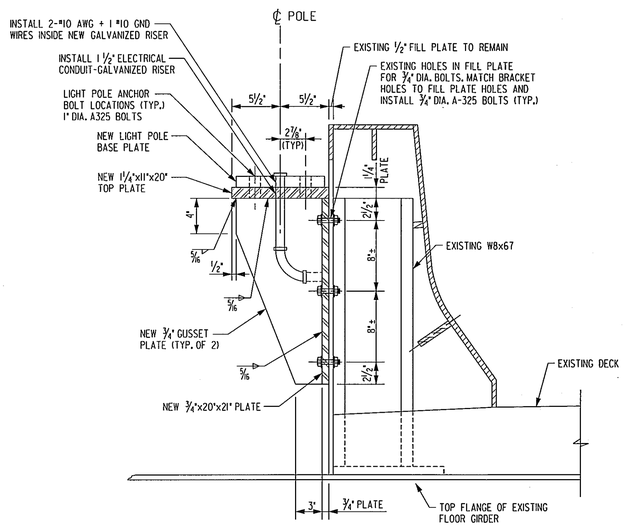

SECTION A–A

NOTES:

1. MOUNTING BRACKET SHALL BE ASTM A-709 GR. 36
2. 2-#10 AWG + 1 #10 GND TO BE INSTALLED FROM PARAPET WALL THROUGH GALVANIZED CONDUIT, THROUGH LIGHT POLE BASE AND EXTENDED TO LUMINAIRE.
3. CLEAN, PAINT AND PRIME EXISTING STEEL FILLER PLATE PRIOR TO ATTACHING NEW MOUNTING BRACKET. PAINT COLOR TO MATCH EXISTING.
4. INSTALL MOUNTING BRACKETS PLUMB.

MOUNTING BRACKET FOR STEEL PARAPET

SCALE: 1½"=1'-0"

DCI
DANIEL CONSULTANTS, INC.
CONSULTING ENGINEERS AND PLANNERS
8950 Rt. 108 E., Suite 229 Columbia, MD. 21045
Phone: 410-995-0090 Fax: 410-992-7038

Maryland Transportation Authority
Engineering Division

ADDENDUMS & REVISIONS			
NO.	DESCRIPTION	BY	DATE

LIGHT POLE AND LUMINAIRE REPLACEMENT
FRANCIS SCOTT KEY BRIDGE (FSK) (I-695)
STRUCTURAL DETAILS AT STEEL PARAPET

DESIGNED BY WW	DRAWN BY TTV	CHECKED BY MD	
CONST. REVIEW BY	DATE JANUARY 2010	SCALE AS SHOWN	

CONTRACT NO. KB 2250-000-002
DRAWING NO. S-1
SHEET NO. 5 OF 6

H:\PROJECTS\Stuart\04-101-17 FSK Bridge Lighting\DGN 1-15-10 Rev Larry\S-1 FSK DETAIL-1.dgn
Monday, January 18, 2010 AT 01:26 PM

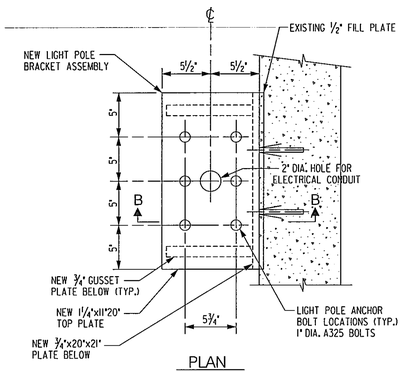

PLAN

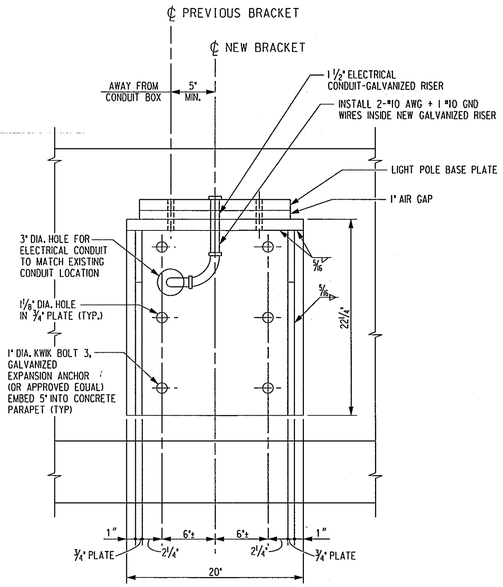

ELEVATION

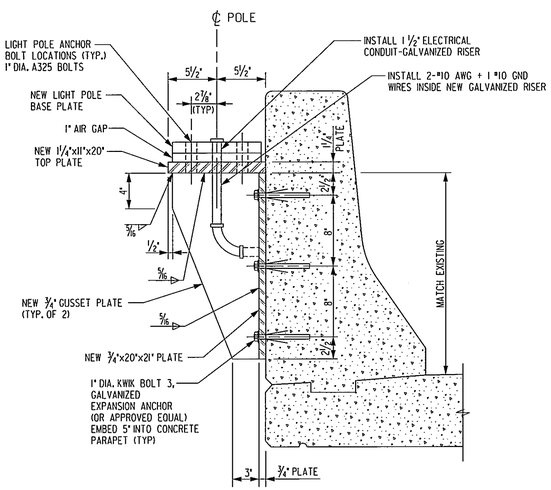

SECTION B–B

NOTES:

1. MOUNTING BRACKET SHALL BE ASTM A-709 GR. 36
2. 2-#10 AWG + 1 #10 GND TO BE INSTALLED FROM PARAPET WALL THROUGH GALVANIZED CONDUIT, THROUGH LIGHT POLE BASE AND EXTENDED TO LUMINAIRE.
3. PULLOUT TEST 4 INSTALLED EXPANSION BOLTS IN ACCORDANCE WITH MANUFACTURER'S RECOMMENDATIONS. RESTORE ANY DAMAGED CONCRETE AS REQUIRED.
4. INSTALL MOUNTING BRACKETS PLUMB.

MOUNTING BRACKET FOR CONCRETE PARAPET

SCALE: 1½"=1'-0"

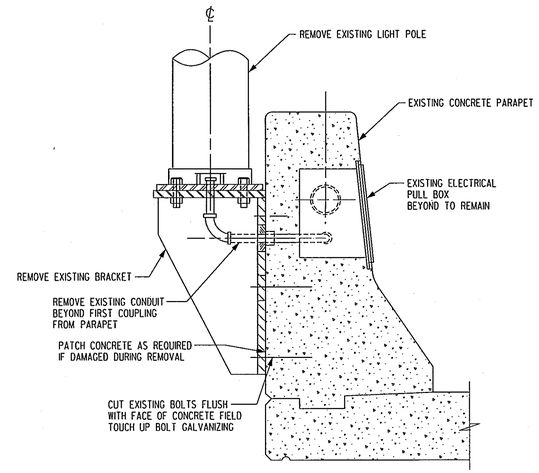

CONCRETE PARAPET MOUNTING BRACKET: EXISTING CONDITION

SCALE: 1½"=1'-0"

NOTE:

CONTRACTOR SHALL REMOVE AND DISPOSE OF EXISTING POLES AND BRACKETS.

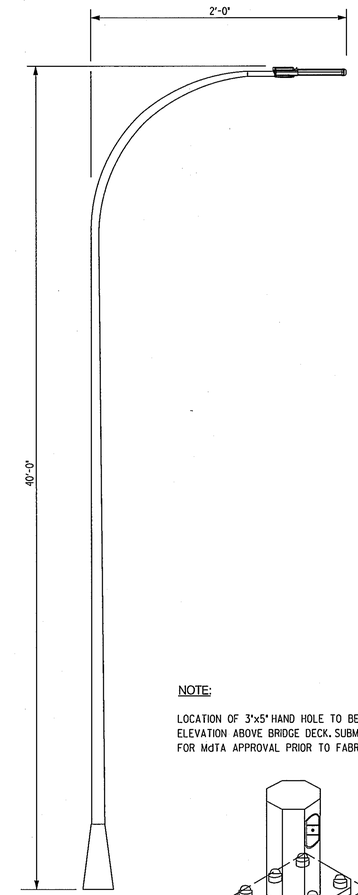

NOTE:

LOCATION OF 3"x5" HAND HOLE TO BE AT A CONSTANT ELEVATION ABOVE BRIDGE DECK. SUBMIT SHOP DRAWING FOR MdTA APPROVAL PRIOR TO FABRICATION.

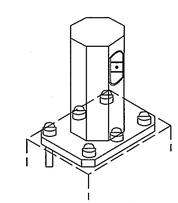

"A" BASE

GALVANIZED STEEL LIGHTING STANDARD

NOT TO SCALE

DCI
DANIEL CONSULTANTS, INC.
CONSULTING ENGINEERS AND PLANNERS
8950 Rt. 108 E., Suite 229 Columbia, MD. 21045
Phone: 410-995-0090 Fax: 410-992-7038

Maryland Transportation Authority
Engineering Division

ADDENDUMS & REVISIONS

NO.	DESCRIPTION	BY	DATE

LIGHT POLE AND LUMINAIRE REPLACEMENT
FRANCIS SCOTT KEY BRIDGE (FSK) (I-695)
STRUCTURAL CONCRETE PARAPET

DESIGNED BY WW	DRAWN BY TTV	CHECKED BY MD	
CONST. REVIEW BY	DATE JANUARY 2010	SCALE AS SHOWN	

CONTRACT NO. KB 2250-000-002
DRAWING NO. S-2
SHEET NO. 6 OF 6

H:\PROJECTS\Struct\04-104-17 FSK Bridge Lighting\DGN 1-15-10 Rev Larry\S-2 FSK DETAIL-2.dgn
Monday, January 18, 2010 AT 01:50 PM