MARYLAND TRANSPORTATION AUTHORITY

BB 2176-000-006R

WILLIAM PRESTON LANE, JR. MEMORIAL BRIDGE

CLEANING AND PAINTING AT WESTBOUND BAY BRIDGE

ANNE ARUNDEL AND QUEEN ANNE'S COUNTIES

CONTRACT NO. BB 2176-000-006R

FOR THE CONVENIENCE AND INFORMATION OF BIDDERS, PRINTS OF PLANS OF THE PERTINENT EXISTING STRUCTURE ARE INCLUDED WITH THIS CONTRACT. NO RESPONSIBILITY FOR THEIR ACCURACY OR COMPLETENESS IS ASSUMED BY THE MARYLAND TRANSPORTATION AUTHORITY. DIMENSIONS, DETAILS, ETC. SHOWN MAY NOT BE AS BUILT.

INCLUDED FOR YOUR USE ARE SHEET NOS. 3-7 AND 9-51 OF 149 OF CONTRACT PB 12-1.

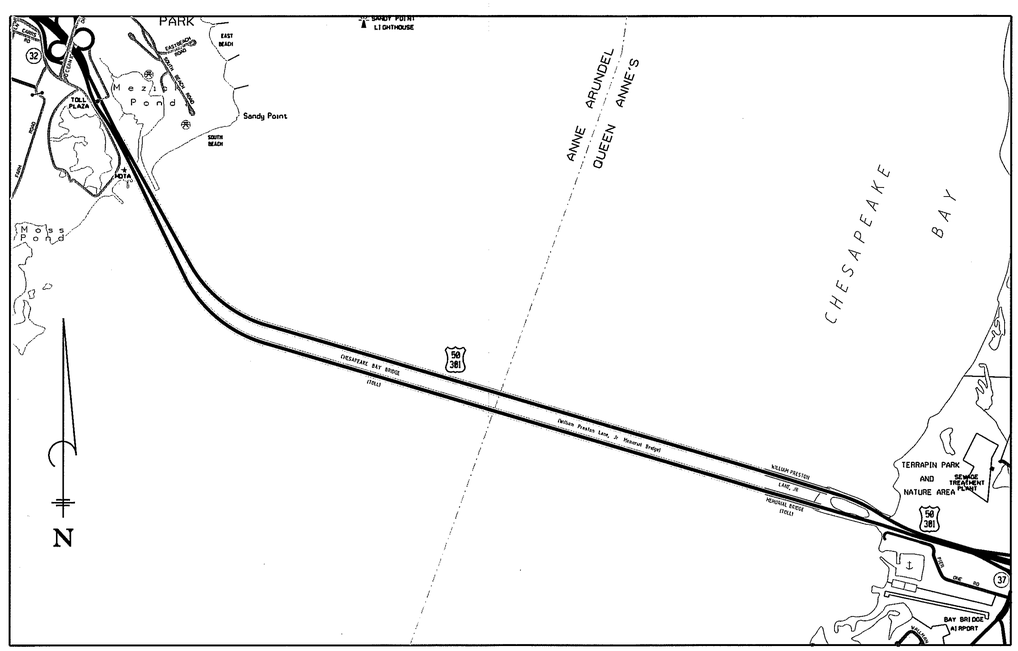

LOCATION MAP

SCALE: 1"=2000'

SPECIFICATIONS

The Specifications for all work on this project shall be State Highway Administration's Standard Specifications entitled "Standard Specifications for Construction And Materials," dated July 2008, and all additions and/or revisions thereto; and other Specifications in the Special Provisions.

STANDARDS

Standards for this contract will be those of the State Highway Administration. It will be the responsibility of the Contractor that the Standards in his possession are the latest S.H.A. Standards as of the date of advertisement.

EROSION AND SEDIMENT CONTROL

Erosion and Sediment control measures shall be applied to all erodible materials exposed by any activity on the project. Erosion and sediment control measures shall be coordinated with the construction at permanent drainage facilities such as pipes, culverts, headwalls, ditch paving, flumes, etc. which shall be constructed prior to or as soon as practicable after the grading operation is begun. The Contractor shall also comply with all provisions of Section 308 of the Specifications.

EROSION AND SEDIMENT CONTROL CERTIFICATION

"We hereby certify that any clearing, grading, construction and/or development will be done pursuant to this plan and that any responsible personnel involved in the construction project will have a certificate of attendance at a Maryland Department of the Environment approved training program for the control of sediment and erosion before beginning this project."

MARYLAND TRANSPORTATION AUTHORITY		
	RECOMMENDED FOR APPROVAL Douglas Hutchison DIRECTOR, ENGINEERING DIVISION	3-16-10 DATE
	APPROVED Geoffrey V. Kodbey CHIEF ENGINEER, OFFICE OF ENGINEERING AND CONSTRUCTION	03/16/10 DATE
	APPROVED Ronald L. Freeland EXECUTIVE SECRETARY	3/23/10 DATE

	MADE BY	CHECKED BY
DESIGN	A.J.S.	J.W.H. & S.J.S.
DRAWING	A.J.S.	J.W.H. & S.J.S.
TRACING	A.J.S.	J.W.H. & S.J.S.
QUANTITIES		
IN CHARGE	C.B.M. & S.J.S.	

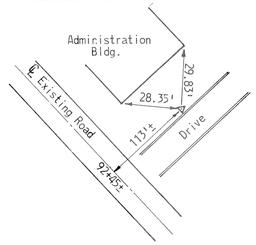

MONUMENT "WILLIAM"
Steel survey marker with cap set in grass at west edge of curb.

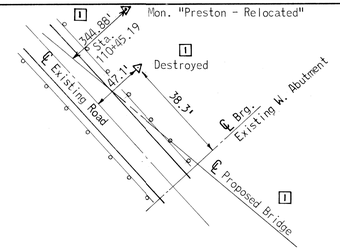

MONUMENT "PRESTON"
Concrete Monument with steel survey marker with cap set in center.

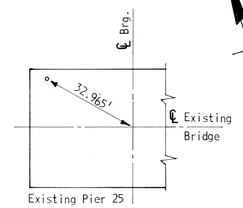

MONUMENT "25 - A"
A drilled hole filled with lead with a survey tack in the center.

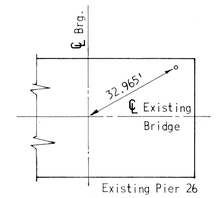

MONUMENT "26 - A"
A drilled hole filled with lead with a survey tack in the center.

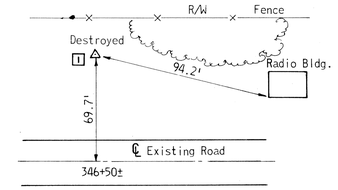

MONUMENT "LANE"
Concrete Monument with steel survey pin with cap set in center.

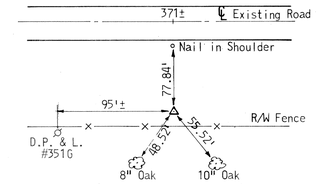

MONUMENT "JUNIOR"
Steel survey marker with cap set flush with ground.

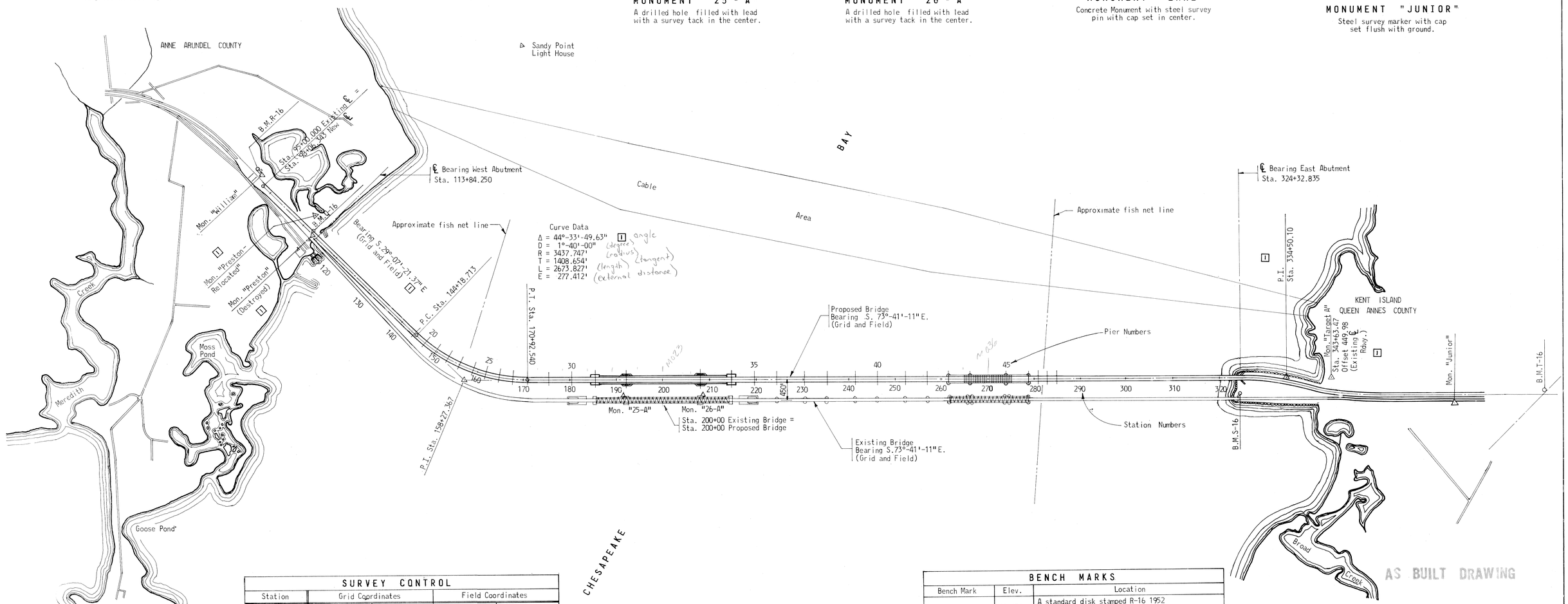

AS BUILT DRAWING

SURVEY CONTROL					
Station	Grid Coordinates		Field Coordinates		
	N.	E.	N.	E.	
Mon. "William"	430138.659	968542.074	430138.946	968541.940	
98+06.343	429860.630	968552.930	429860.902	968552.792	
~~Mon. "Preston"~~	~~428491.900~~	~~969268.827~~	~~428492.107~~	~~969268.728~~	Destroyed [1]
P.I. 158+27.367	424601.031	971483.091	424601.054	971483.104	[1]
Mon. "25-A"	423212.784	974720.532	423212.737	974720.696	
Mon. "26-A"	422752.757	976292.314	422752.688	976292.554	
~~Mon. "Lane"~~	~~418908.011~~	~~989579.920~~	~~418907.757~~	~~989580.801~~	Destroyed [1]
Mon. "Junior"	418066.252	991885.507	418065.957	991886.499	
Mon."Preston Rel"			428620.753	969536.958	[1]
Mon. "Target A"			419354.040	989410.614	[1]
P.I. 334+50.100			419610.619	988534.026	[1]

1000 0 1000 2000 3000
Scale in Feet

BENCH MARKS		
Bench Mark	Elev.	Location
R-16	12.459	A standard disk stamped R-16 1952 110' Lt. Exist. ℄ Sta. 91+10
Q-16	16.892	A standard disk stamped Q-16 1952 On N. End West Abut.
S-16	21.299	A standard disk stamped S-16 1952 On N. End East Abut.
T-16 Reset 1958	14.203	A standard disk stamped T-16 Reset 1958 In conc. headwall, 100' N. of ℄ Sta. 389+45 Rt. 50 & 5' W. of NBL Rt. 8

NOTE A: PB 12-1, PB 13-1, PB 14-1, PB 15-1 & PB 16-1

STATE OF MARYLAND
STATE ROADS COMMISSION
BALTIMORE, MD.
WM. PRESTON LANE, JR. MEMORIAL BRIDGE
SANDY POINT-KENT ISLAND

GENERAL PROJECT PLAN

SCALE: 1" = 1000' DATE: JULY, 1969 CONTRACT: Note A

[1] S.J.S. 10/23/69
REVISIONS

J.E. GREINER COMPANY, INC.
CONSULTING ENGINEERS
BALTIMORE, MARYLAND

SHEET 3 OF 149

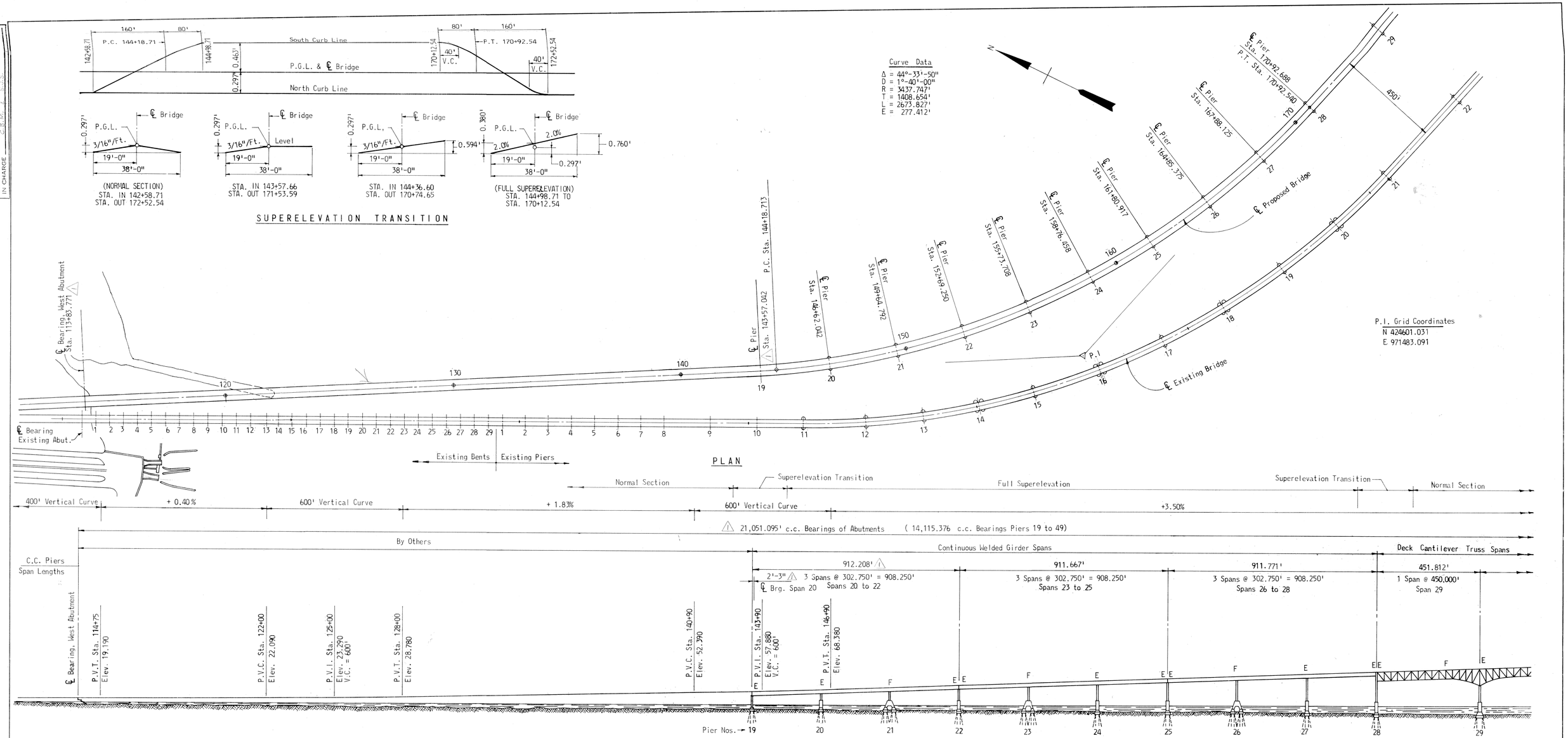

PROFILE GRADE DATA - WEST APPROACH

P.V.I. Sta. 104+50 Elev. 10.140
P.V.I. Sta. 112+75 Elev. 18.390

NOTE:

ALL DIMENSIONS & SPAN LENGTHS SHOWN ARE HORIZONTAL EXCEPT SPAN LENGTHS MARKED WITH AN ASTERISK WHICH ARE MEASURED ON GRADE.

AS BUILT DRAWING

NOTE A: PB 12-1, PB 13-1, PB 14-1, PB 15-1, & PB 16-1

STATE OF MARYLAND
STATE ROADS COMMISSION
BALTIMORE, MD.
WM. PRESTON LANE, JR. MEMORIAL BRIDGE
SANDY POINT-KENT ISLAND

GENERAL PLAN AND ELEVATION - I

SCALE: 1" = 200' DATE: JULY, 1969 CONTRACT: Note A

J.E. GREINER COMPANY, INC.
CONSULTING ENGINEERS
BALTIMORE, MARYLAND

SHEET 4 OF 149

J.W.H 1/23/70
REVISIONS

200 0 200 400 600 800
Scale in feet

	MADE BY	CHECKED BY
DESIGN	A.J.S.	J.W.H. & R.J.S.
DRAWING	A.J.S.	J.W.H. & R.J.S.
TRACING	A.J.S.	
QUANTITIES	G.B.W.	R.J.S.
IN CHARGE		

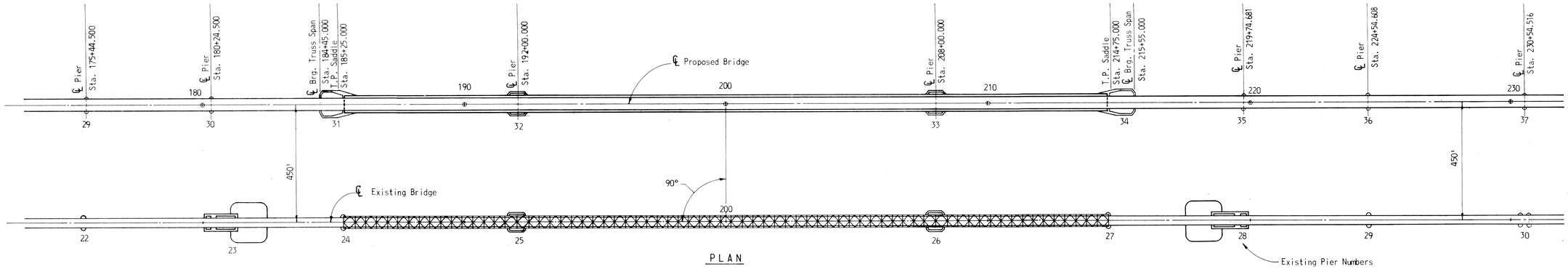

PLAN

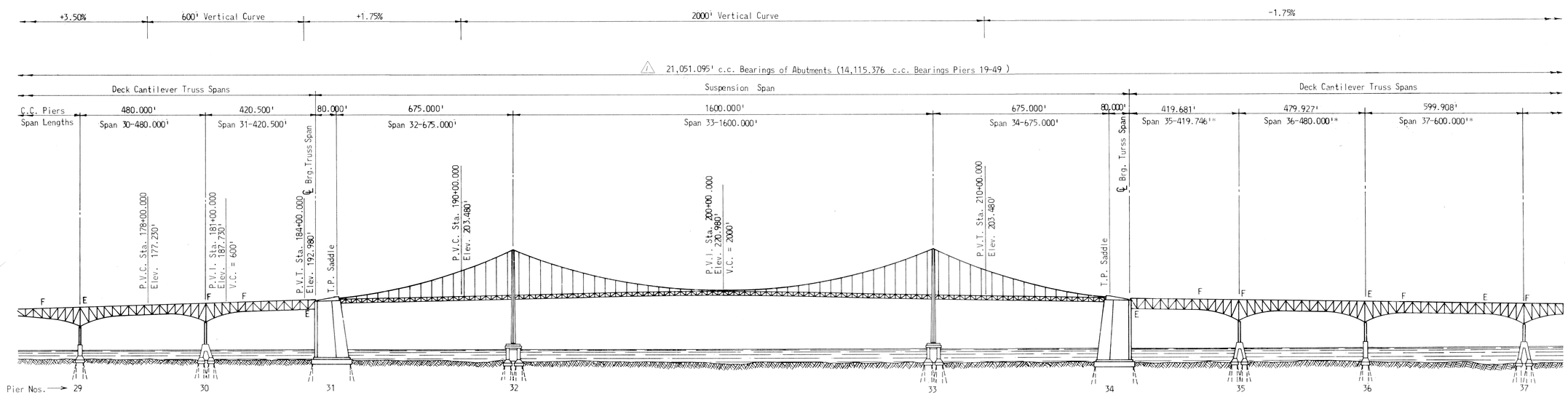

ELEVATION

BUILT DRAWING

NOTE A: PB 12-1, PB 13-1, PB 14-1, PB 15-1 & PB 16-1

NOTE:

ALL DIMENSIONS & SPAN LENGTHS SHOWN ARE HORIZONTAL EXCEPT SPAN LENGTHS MARKED WITH AN ASTERISK WHICH ARE MEASURED ON GRADE.

200 0 200 400 600 800

Scale in feet

STATE OF MARYLAND
STATE ROADS COMMISSION
BALTIMORE, MD.

WM. PRESTON LANE, JR. MEMORIAL BRIDGE
SANDY POINT–KENT ISLAND

GENERAL PLAN AND ELEVATION - II

SCALE: 1" = 200' DATE: JULY, 1969 CONTRACT: Note A

J.W.H. 1/23/70
REVISIONS

J.E. GREINER COMPANY, INC.
CONSULTING ENGINEERS
BALTIMORE, MARYLAND

SHEET 5 OF 149

	MADE BY	CHECKED BY
DESIGN	A.G.S.	
DRAWING	A.G.S.	J.W.H. & R.J.S.
TRACING		
QUANTITIES	W.B.M.	J. Ewing
IN CHARGE		

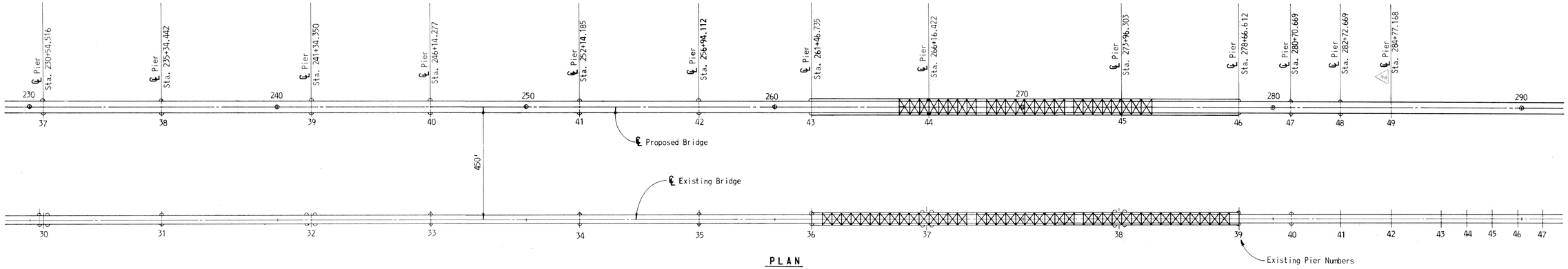

PLAN

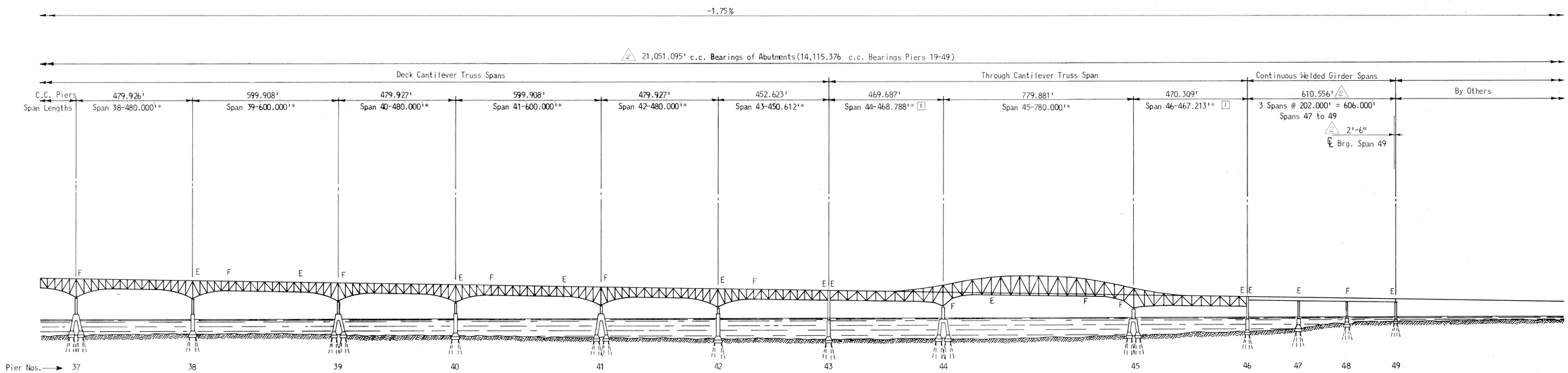

ELEVATION

NOTE:

ALL DIMENSIONS & SPAN LENGTHS SHOWN ARE HORIZONTAL EXCEPT LENGTHS MARKED WITH AN ASTERISK WHICH ARE MEASURED ON GRADE.

AS BUILT DRAWING

NOTE A: PB 12-1, PB 13-1, PB 14-1, PB 15-1 & PB 16-1

200 0 200 400 600 800

Scale in feet

STATE OF MARYLAND
STATE ROADS COMMISSION
BALTIMORE, MD.

WM. PRESTON LANE, JR. MEMORIAL BRIDGE
SANDY POINT-KENT ISLAND

GENERAL PLAN AND ELEVATION - III

SCALE: 1" = 200' DATE: JULY, 1969 CONTRACT: Note A

REVISIONS	J.E. GREINER COMPANY, INC. CONSULTING ENGINEERS BALTIMORE, MARYLAND	SHEET 6 OF 149
2 J.W.H. 11/25/70		
1 S.J.S. 10/23/69		

	MADE BY	CHECKED BY
C- DESIGN	A.J.S.	J.W.H. & R.S.
DRAWING	A.J.S.	
TRACING	—	
QUANTITIES	C.B.M. & S.V.S.	
IN CHARGE		

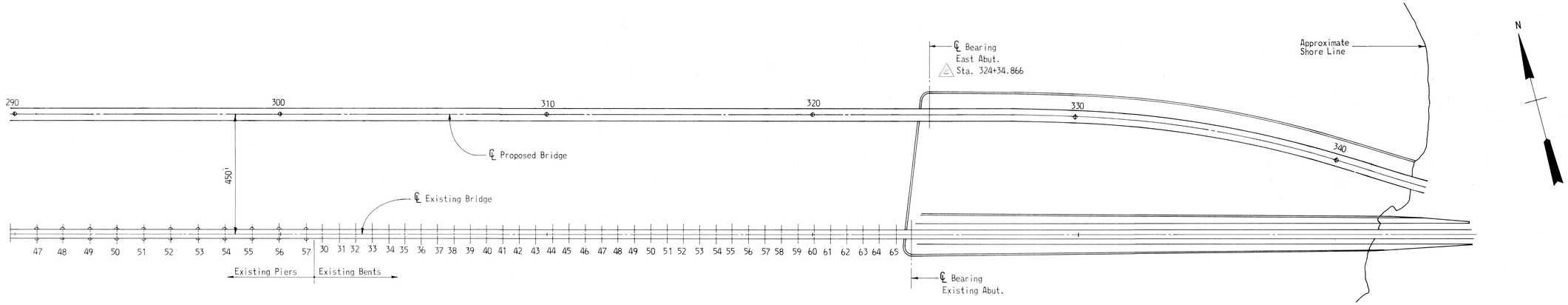

PLAN

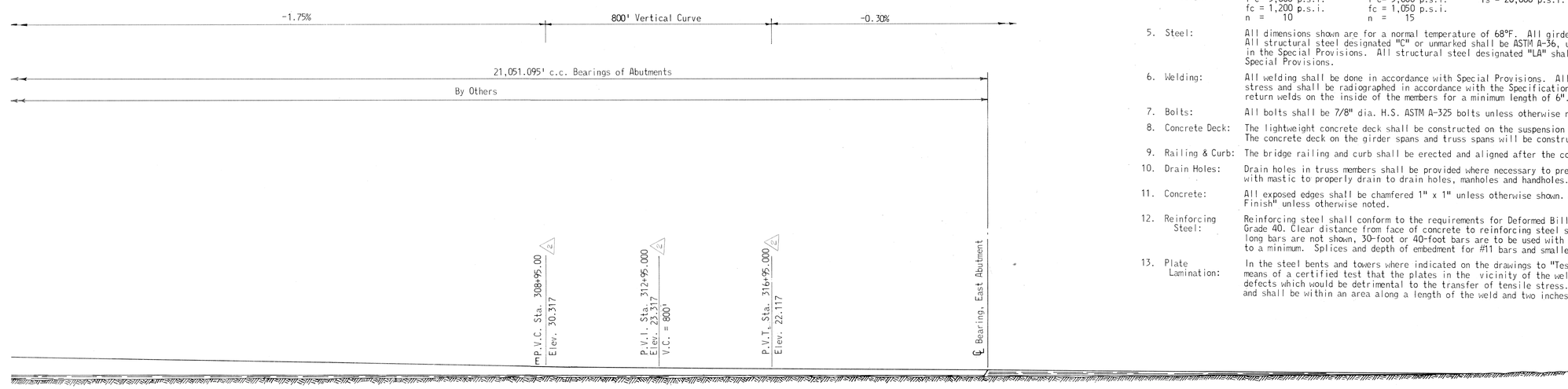

ELEVATION

GENERAL NOTES

1. Specifications: Design: American Association of State Highway Officials (AASHO), Standard Specifications for Highway Bridges, 1965 Edition, and 1966-1967 Interim Specifications.

   Materials and Construction: State of Maryland, State Roads Commission, Specifications for Materials, Highways, Bridges and Incidental Structures, March, 1968, and the Special Provisions.

2. Live Load: HS20-44 or a pair of 24,000# dual axles spaced 4 feet apart. Suspension Span: 640#/l.f. per lane for loaded length of 400' or less. 480#/l.f. per lane for loaded length of 1,600' or more. Straight line proportion for intermediate loaded lengths. 18,000 lb. concentrated load per lane.

3. Datum: All elevations are in feet and are based on U.S. Coast and Geodetic Survey Mean Sea Level Datum, 1929 adjustment.

4. Stresses For Design:

Class A Concrete:	Lightweight Concrete:	Reinforcing Steel:	A36 Steel	Low Alloy Steel
f'c= 3,000 p.s.i. fc = 1,200 p.s.i. n = 10	f'c= 3,000 p.s.i. fc = 1,050 p.s.i. n = 15	fs = 20,000 p.s.i.	fs=20,000 p.s.i.	fs=27,000 p.s.i. (up to 4" thickness)

5. Steel: All dimensions shown are for a normal temperature of 68°F. All girder and truss spans shall be cambered for full dead load. All structural steel designated "C" or unmarked shall be ASTM A-36, unless otherwise specifically designated on the Plans or in the Special Provisions. All structural steel designated "LA" shall be low alloy steel in accordance with the Special Provisions.

6. Welding: All welding shall be done in accordance with Special Provisions. All groove welds shall be considered as carrying primary stress and shall be radiographed in accordance with the Specifications. The ends of all welded box members shall have end return welds on the inside of the members for a minimum length of 6".

7. Bolts: All bolts shall be 7/8" dia. H.S. ASTM A-325 bolts unless otherwise noted.

8. Concrete Deck: The lightweight concrete deck shall be constructed on the suspension span and the girder spans atop Piers 31 and 34. The concrete deck on the girder spans and truss spans will be constructed by others.

9. Railing & Curb: The bridge railing and curb shall be erected and aligned after the concrete deck has been placed.

10. Drain Holes: Drain holes in truss members shall be provided where necessary to prevent pocketing of water. Members shall be filled with mastic to properly drain to drain holes, manholes and handholes.

11. Concrete: All exposed edges shall be chamfered 1" x 1" unless otherwise shown. All exposed concrete shall be given "Ordinary Surface Finish" unless otherwise noted.

12. Reinforcing Steel: Reinforcing steel shall conform to the requirements for Deformed Billet-Steel Bars for Concrete Reinforcement, ASTM A-615, Grade 40. Clear distance from face of concrete to reinforcing steel shall be 3" unless otherwise shown. Where splices in long bars are not shown, 30-foot or 40-foot bars are to be used with splicing as required; however, splices shall be kept to a minimum. Splices and depth of embedment for #11 bars and smaller shall be 30 diameters unless otherwise noted.

13. Plate Lamination: In the steel bents and towers where indicated on the drawings to "Test plate for laminations", the Contractor shall verify by means of a certified test that the plates in the vicinity of the welds are free from lamination, contaminations or any other defects which would be detrimental to the transfer of tensile stress. The testing shall be in accordance with ASTM A-435 and shall be within an area along a length of the weld and two inches each side of the weld. [1]

AS BUILT DRAWING

NOTE A: PB 12-1, PB 13-1, PB 14-1, PB 15-1 & PB-16-1

NOTE:

ALL DIMENSIONS & SPAN LENGTHS SHOWN ARE HORIZONTAL EXCEPT LENGTHS MARKED WITH AN ASTERISK WHICH ARE MEASURED ON GRADE.

200 0 200 400 600 800

Scale in feet

STATE OF MARYLAND
STATE ROADS COMMISSION
BALTIMORE, MD.
WM. PRESTON LANE, JR. MEMORIAL BRIDGE
SANDY POINT–KENT ISLAND

GENERAL PLAN AND ELEVATION - IV

SCALE: 1" = 200' DATE: JULY, 1969 CONTRACT: Note A

[2] J.W.H. 11/23/70
[1] S.J.S. 10/23/69
REVISIONS

J. E. GREINER COMPANY, INC.
CONSULTING ENGINEERS
BALTIMORE, MARYLAND

SHEET 7 OF 149

MADE BY	T. von R.
DESIGN	T. von R.
DRAWING	R.J.S. & T.J.S.
TRACING	
QUANTITIES	
IN CHARGE	C.B.M. & S.J.S.
CHECKED BY	R.J.S.
	R.J.S.
	T.J.S.

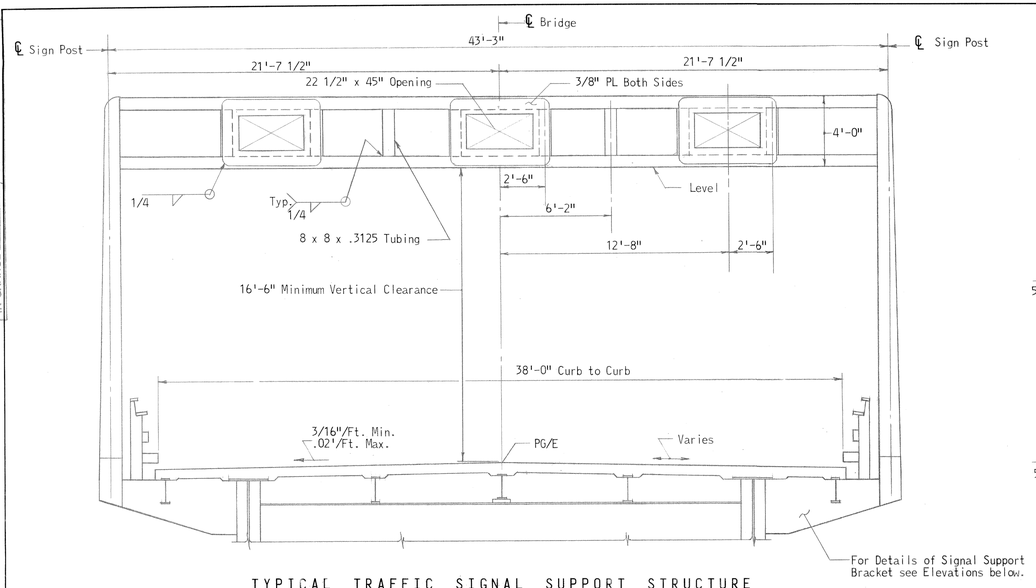

TYPICAL TRAFFIC SIGNAL SUPPORT STRUCTURE

Scale: 1/4" = 1'-0"

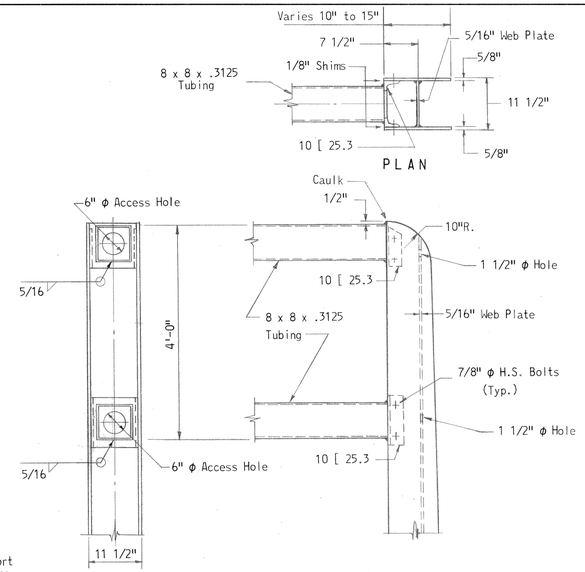

SIGN POST CONNECTION

Scale: 3/4" = 1'-0"

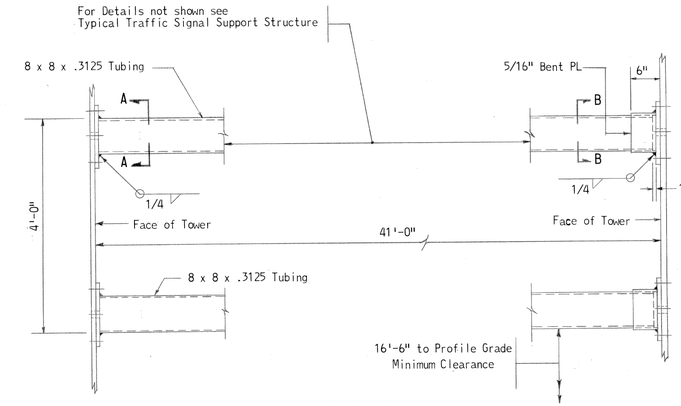

ELEVATION

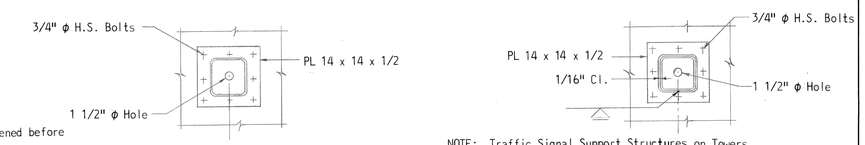

NOTE: Traffic Signal Support Structures on Towers to be located 1'-0" West of ℄ Pier 32 and 1'-0" East of ℄ Pier 33

SECTION A-A

SECTION B-B

TRAFFIC SIGNAL SUPPORT STRUCTURE AT SUSPENSION SPAN TOWERS

Scale: 3/4" = 1'-0"

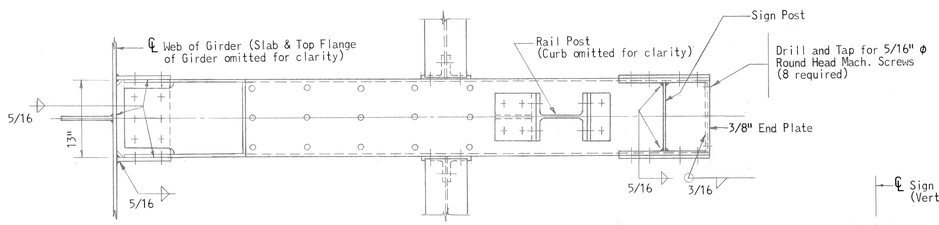

PLAN

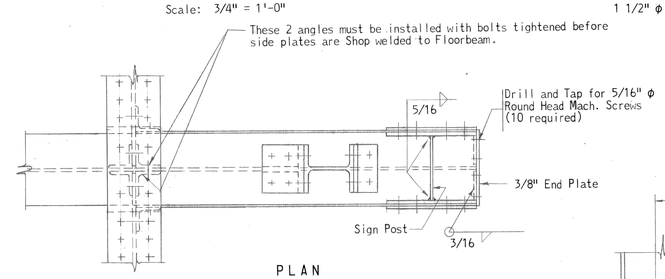

PLAN

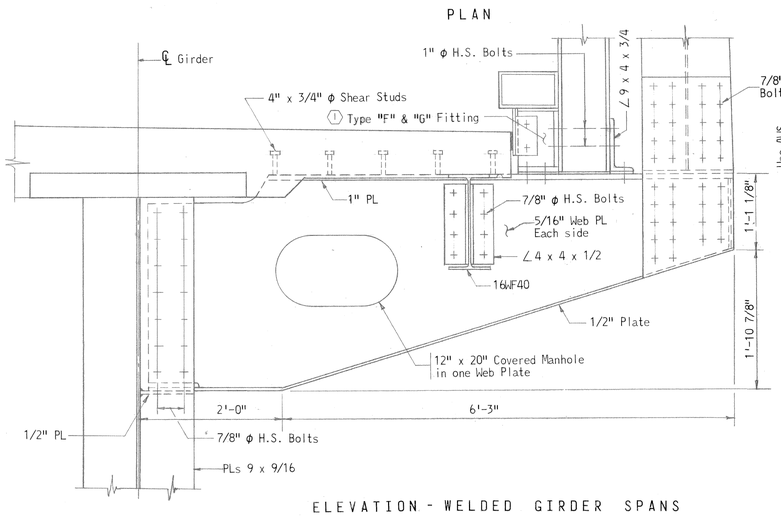

ELEVATION - WELDED GIRDER SPANS

Scale: 1" = 1'-0"

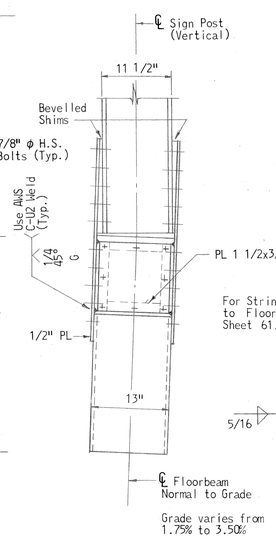

END VIEW

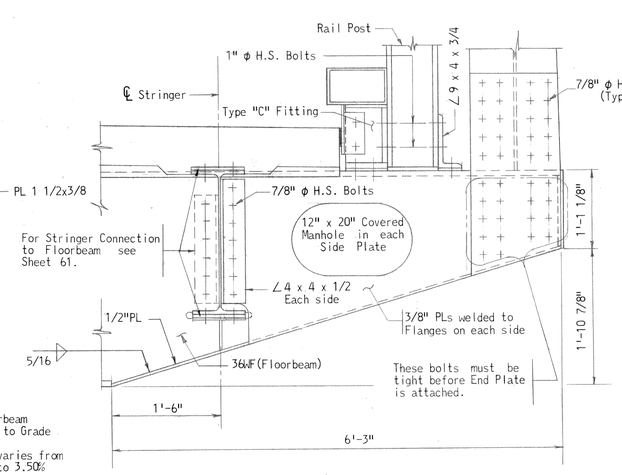

ELEVATION - DECK CANTILEVER TRUSS SPANS

Scale: 1" = 1'-0"

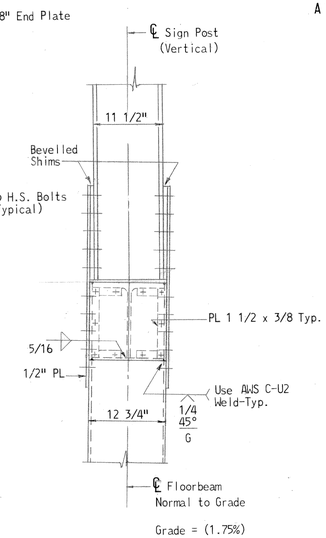

END VIEW

NOTES:

1. For General Notes see Sheet 7.
2. ① For Type "F" & "G" Fittings see Sheets 15 & 62.
3. For Traffic Signal Support Structure Locations see Framing Plan Sheets 11,53 & 57 Contract PB 12-1 shall provide for 3 additional structures for which the details and locations will be furnished at a later date.
4. The weight of traffic signal supports structures will be paid for at the contract unit price per pound for "Structural Steel, Girder" in Contract PB 12-1, "Structural Steel, Deck Trusses " in Contract PB 13-1 and "Structural Steel, Suspension Span Towers" in Contract PB 15-1.

AS BUILT DRAWING

NOTE A: PB 12-1, PB 13-1 & PB 15-1

STATE OF MARYLAND
STATE ROADS COMMISSION
BALTIMORE, MD.
WM. PRESTON LANE, JR. MEMORIAL BRIDGE
SANDY POINT-KENT ISLAND

TRAFFIC SIGNAL SUPPORT STRUCTURE

SCALE: As Noted DATE: JULY, 1969 CONTRACT: NOTE A

① As Built Dwg. J.G.L. 4/76
REVISIONS

J. E. GREINER COMPANY, INC.
CONSULTING ENGINEERS
BALTIMORE, MARYLAND

SHEET 9 OF 149

C-1100	MADE BY	CHECKED BY
DESIGN	BJR & KKS	CPG & HW
DRAWING	ATD	HEC
TRACING	JGW	HEC, R.I.S.
QUANTITIES		
IN CHARGE	C.B.M. & S.J.S.	

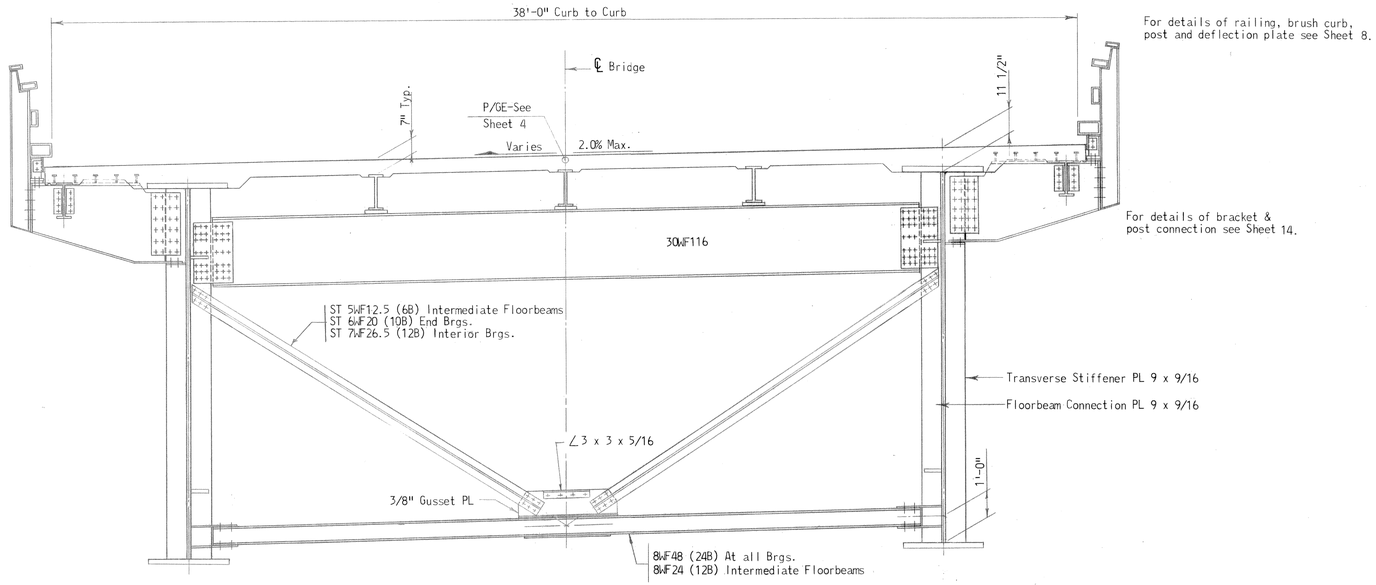

TYPICAL CROSS-SECTION AT INTERMEDIATE FLOORBEAM

Scale: 3/8" = 1'-0"

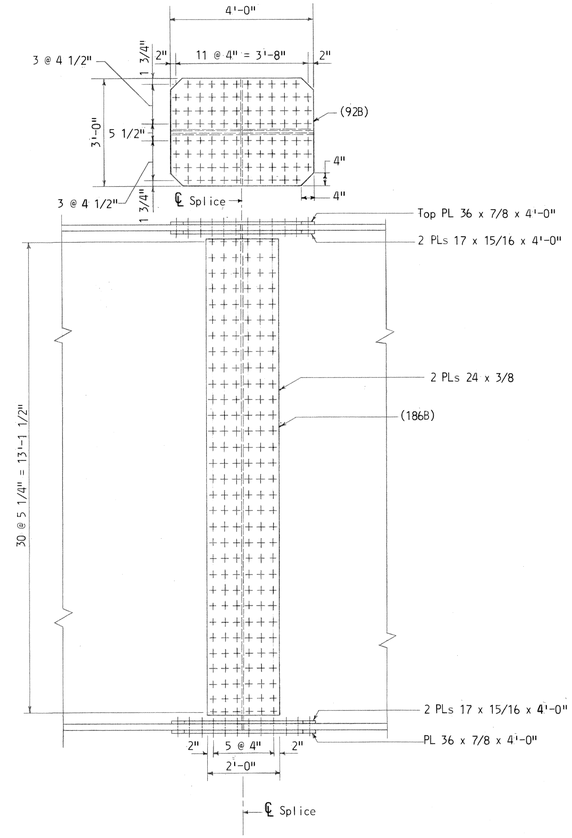

FIELD SPLICE DETAIL B & C

Scale: 1/2" = 1' 0"

SECTION A-A

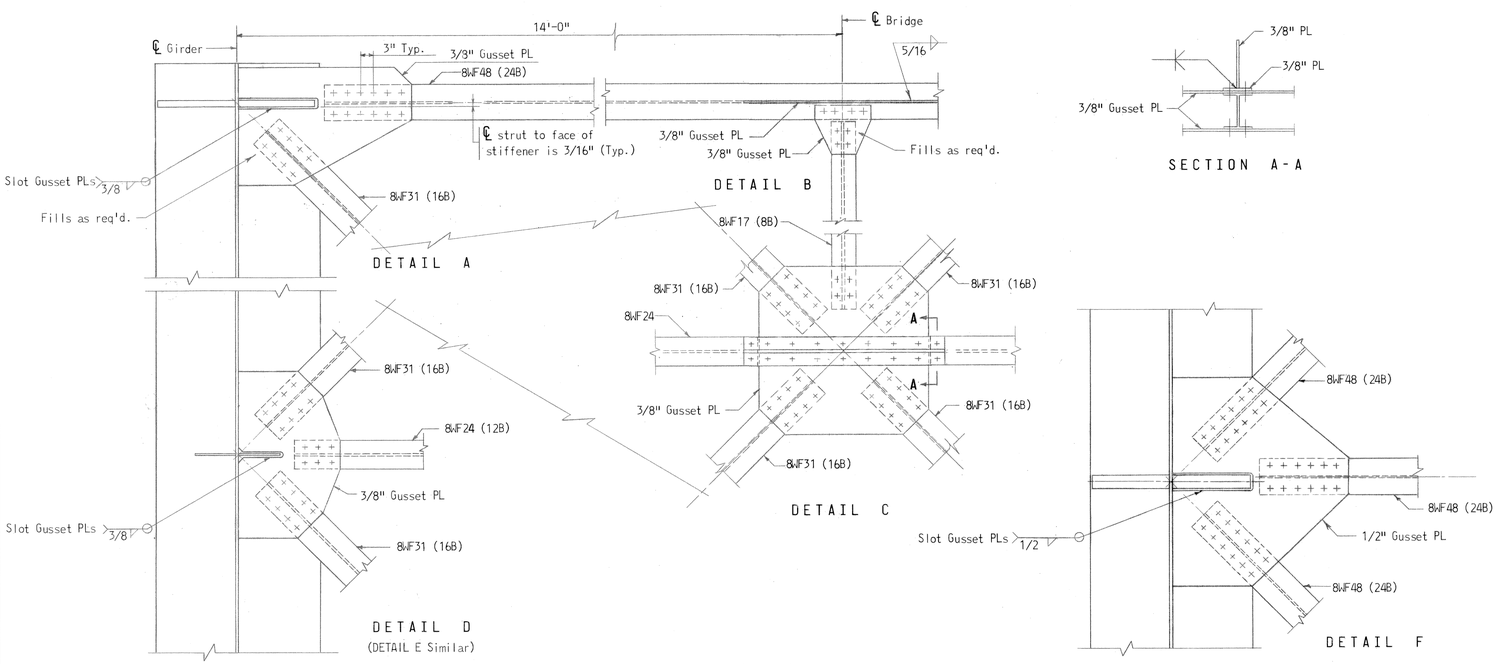

LATERAL BRACING DETAILS

Scale: 3/4" = 1'-0"

NOTES:

1. For General Notes see Sheet 7.
2. For Other Notes see Sheet 14.
3. For Detail of Stringer Splice and Stringer Bearing see Sheet 14.
4. For Detail of Floorbeam Connection see Sheet 14.
5. For End Floorbeams see Sheet 16.
6. Number of 7/8" ϕ H.S. Bolts shown thus (12B).
7. For location of Lateral Bracing Details see Sheet 11. 1
8. (1) For Field Splice Detail A See Sheet 12A.

AS BUILT DRAWING

STATE OF MARYLAND
STATE ROADS COMMISSION
BALTIMORE, MD.
WM. PRESTON LANE, JR. MEMORIAL BRIDGE
SANDY POINT-KENT ISLAND
CONTINUOUS WELDED GIRDER SPANS
302'-9" SPANS
CROSS SECTIONS & STEEL DETAILS

SCALE: As Shown DATE: JULY, 1969 CONTRACT: PB 12-1

(1) AS BUILT DWG. J.G.L. 11-11-74

REVISIONS

J.E. GREINER COMPANY, INC.
CONSULTING ENGINEERS
BALTIMORE, MARYLAND

SHEET 10 OF 149

C-1100	MADE BY	CHECKED BY
DESIGN	B.A.R. & K.S.	C.T.&T. H.W.
DRAWING	K.J.	H.E.C. R.
TRACING	W.G.H.	
QUANTITIES	C.B.M. B.S.N.S.	
IN CHARGE		

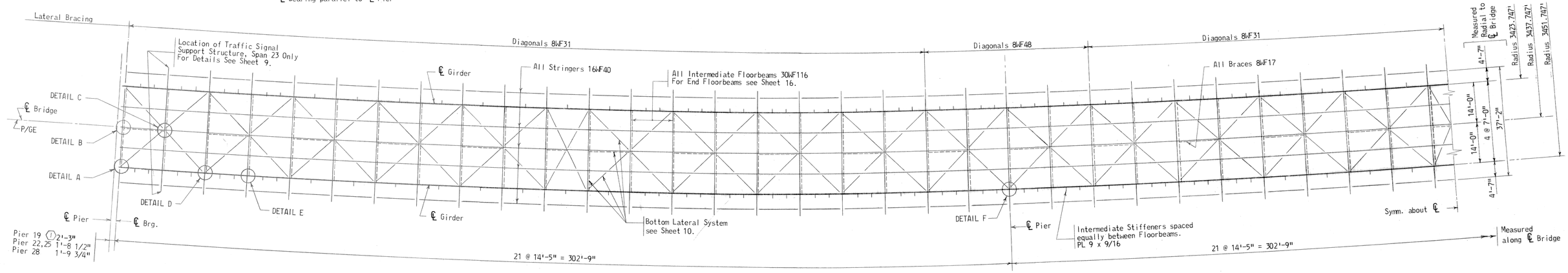

FRAMING PLAN

Scale: 1/16" = 1'-0"

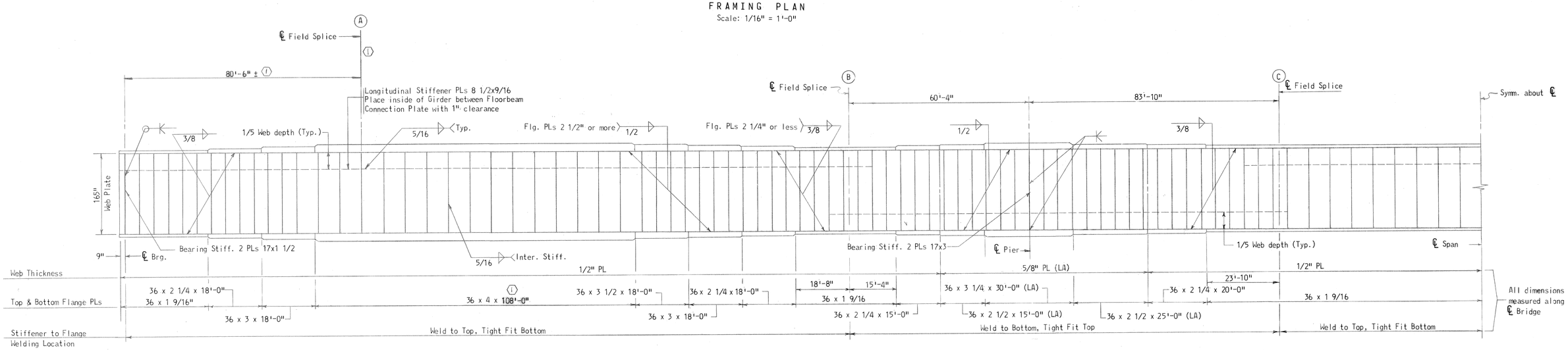

GIRDER ELEVATION

Scale: Horiz.: 1/16" = 1'-0"
Vert. : 1/8" = 1'-0"

Total D.L. Camber	0	.186	.337	.438	.488	.489	.439	.340	.213	.087	0	-.031	-.016	.027	.065	.080
Superimposed D.L.	0	.014	.027	.036	.039	.039	.036	.027	.017	.007	0	-.003	-.002	.003	.005	.007
Slab	0	.087	.158	.205	.229	.230	.206	.160	.100	.041	0	-.014	-.007	.012	.031	.037
Steel	0	.085	.152	.197	.220	.220	.197	.153	.096	.039	0	-.014	-.007	.012	.029	.036

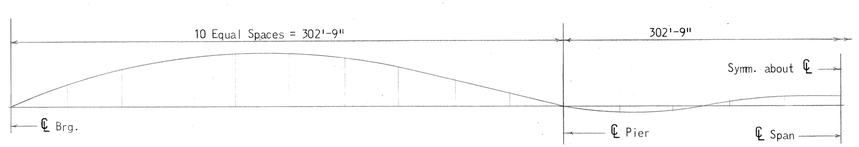

Where applicable, provision shall be made for vertical curve & superelevation.

DEAD LOAD CAMBER DIAGRAM

(Camber shown in feet)
Not to Scale

NOTES:

1. For General Notes see Sheet 7.
2. For Other Notes see Sheet 14.
3. For Field Splice Detail see Sheet 10.
4. For Details of Web & Flange Shop Splices see Sheet 14.
5. For Details A thru F see Sheet 10.
6. For Shoe Types and locations see Sheet 18.
7. Additional field splices, at the option of the Contractor, will be permitted. Location and design shall be submitted to the Engineer for approval.

AS BUILT DRAWING

STATE OF MARYLAND
STATE ROADS COMMISSION
BALTIMORE, MD.
WM. PRESTON LANE, JR. MEMORIAL BRIDGE
SANDY POINT-KENT ISLAND
CONTINUOUS WELDED GIRDER SPANS
302'-9" SPANS
FRAMING PLAN & STEEL DETAILS

SCALE: As Noted DATE: JULY, 1969 CONTRACT: PB 12-1

⟨I⟩ AS BUILT DWG. J.G.L. 11-11-74
REVISIONS

J. E. GREINER COMPANY, INC.
CONSULTING ENGINEERS
BALTIMORE, MARYLAND

SHEET 11 OF 149

C-1100 DESIGN DRAWING TRACING QUANTITIES IN CHARGE
MADE BY CPG & KKS B.T. W.G.L. C.B.M. & S.J.S.
CHECKED BY HW & EDR ATD ATD R.I.S.

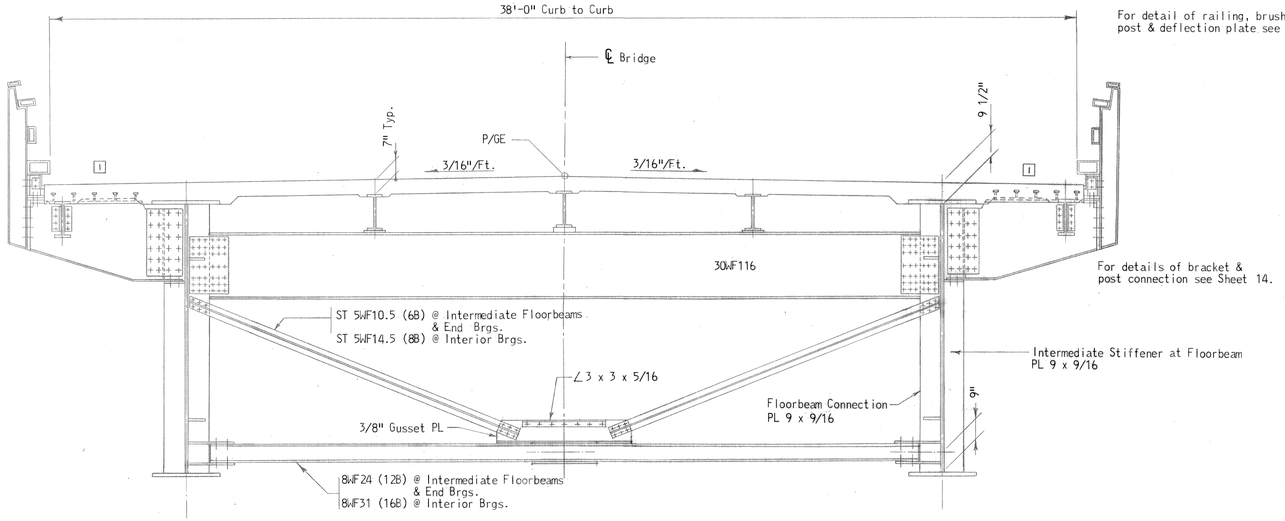

For detail of railing, brush curb, post & deflection plate see Sheet 8.

For details of bracket & post connection see Sheet 14.

Intermediate Stiffener at Floorbeam PL 9 x 9/16

TYPICAL CROSS SECTION AT INTERMEDIATE FLOORBEAM
Scale: 3/8" = 1'-0"

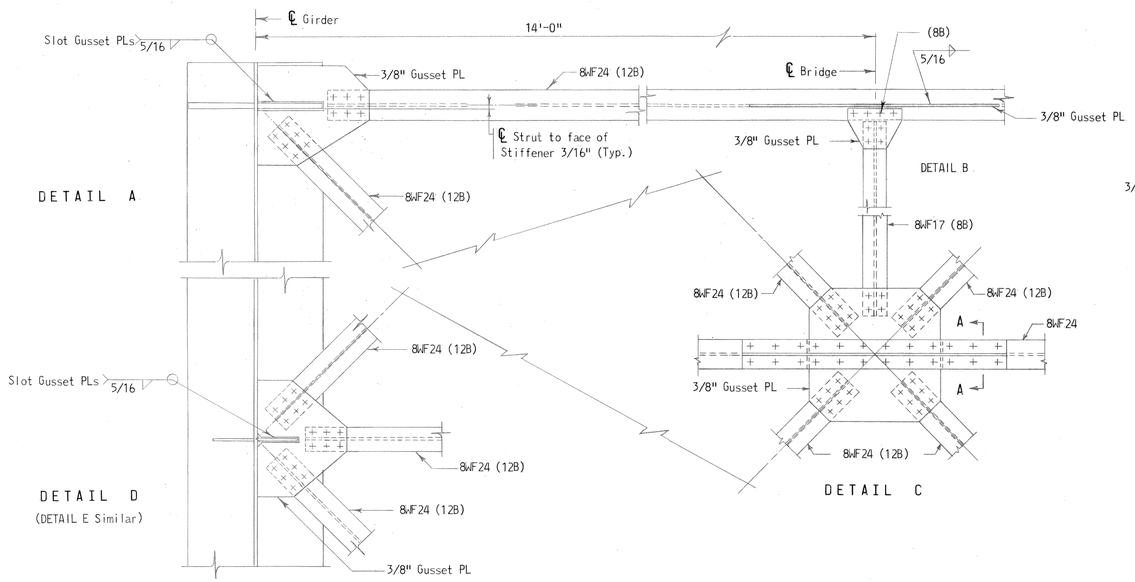

DETAIL A

DETAIL D
(DETAIL E Similar)

DETAIL C

LATERAL BRACING DETAILS
Scale: 3/4" = 1'-0"

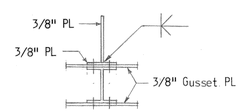

SECTION A-A

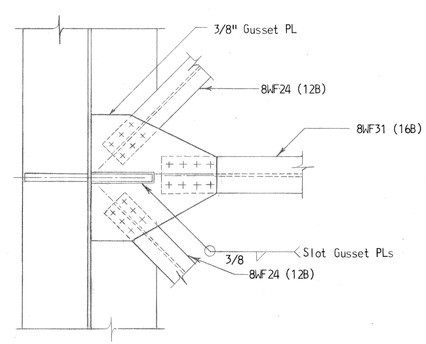

DETAIL F

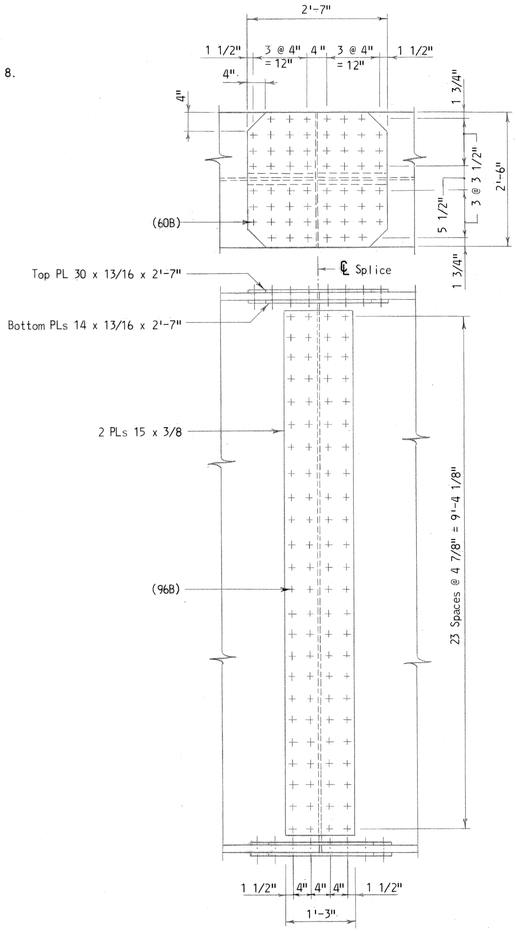

FIELD SPLICE DETAIL F
Scale: 3/4" = 1' 0"

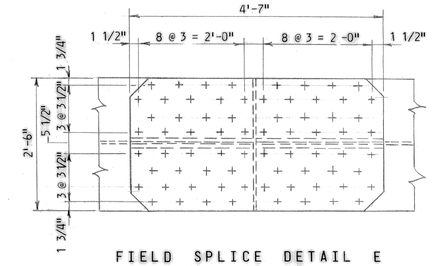

FIELD SPLICE DETAIL E
Scale: 3/4" = 1'-0"
(2)

NOTES:

1. For General Notes see Sheet 7.
2. For Other Notes see Sheet 14.
3. For Detail of Stringer Splice and Stringer Bearing see Sheet 14.
4. For Detail of Floorbeam Connection see Sheet 14.
5. For End Floorbeams see Sheet 16.
6. Number of 7/8" φ H.S. Bolts shown thus (12B).
7. For location of Lateral Bracing Details see Sheet 13. 33
(2) 8. For Field Splice Detail D See Sheet 12A.

BUILT DRAWING

STATE OF MARYLAND
STATE ROADS COMMISSION
BALTIMORE, MD.
WM. PRESTON LANE, JR. MEMORIAL BRIDGE
SANDY POINT-KENT ISLAND
CONTINUOUS WELDED GIRDER SPANS
202'-0" SPANS
CROSS SECTIONS & STEEL DETAILS

(2) AS BUILT DWG J.G.L. 11-11-74
1 S.J.S. 10/23/69
REVISIONS

SCALE: As Shown DATE: JULY, 1969 CONTRACT: PB 12-1

J.E. GREINER COMPANY, INC.
CONSULTING ENGINEERS
BALTIMORE, MARYLAND

SHEET 12 OF 149

C- DESIGN	A.B.Co.	CHECKED BY F.P.
DRAWING	O.A.B.	
TRACING	O.A.B.	
QUANTITIES		
IN CHARGE	C.B.M. & B.J.S.	

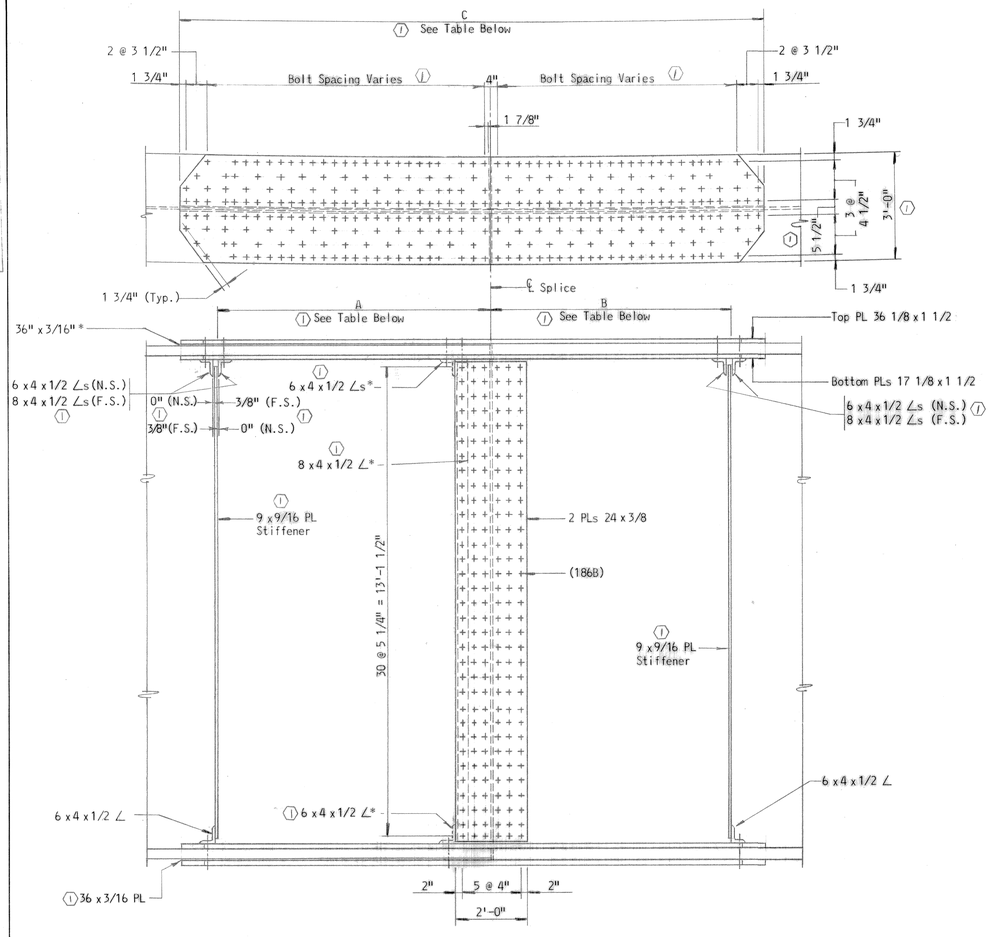

FIELD SPLICE DETAIL A (302'-9" SPANS)

Scale: 1/2" = 1'-0"

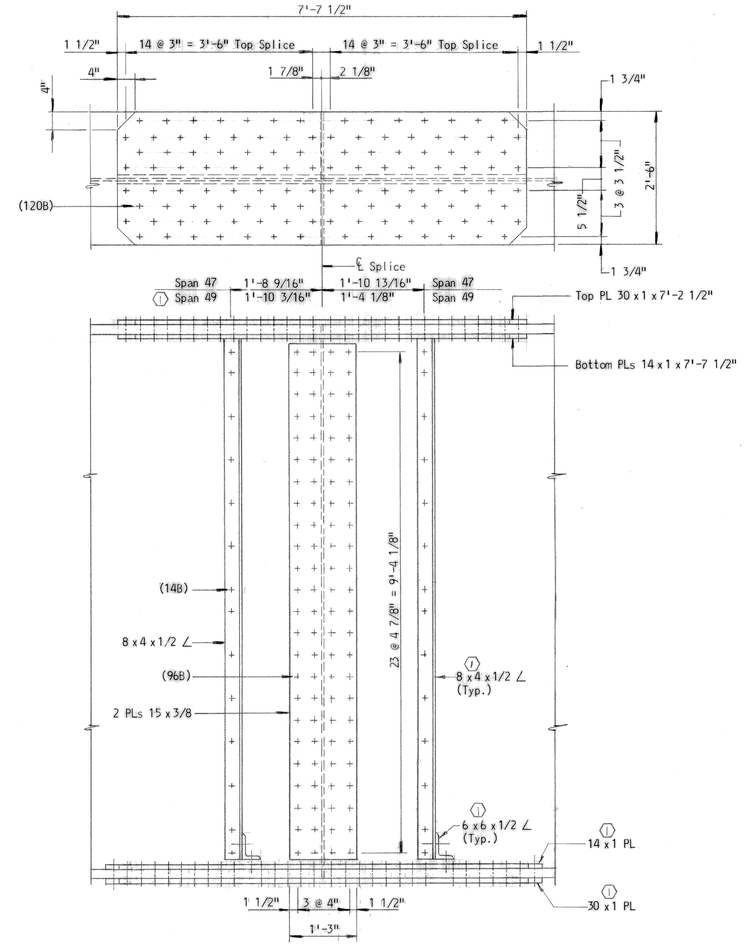

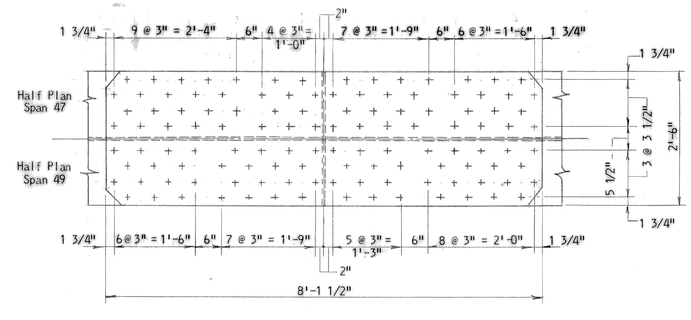

FIELD SPLICE DETAIL D (202'-0" SPANS)

Scale: 3/4" = 1'-0"

(1) * Left of Splice in Spans 20, 23 & 26.
Right of Splice in Spans 22, 25 & 28.

(1)

NORTH GIRDER			
SPAN	A	B	C
20	7'-7 9/16"	6'-8 9/16"	16'-3 7/8"
22, 25, 28	6'-8 5/16"	7'-7 13/16"	16'-3 5/8"
23 & 26	7'-7 7/16"	6'-8 13/16"	16'-3 5/8"

(1)

SOUTH GIRDER			
SPAN	A	B	C
20	7'-8 1/8"	6'-9 7/16"	16'-5 1/8"
22, 25	6'-8 15/16"	7'-8 9/16"	16'-5 3/8"
23, 26	7'-8 1/16"	6'-9 1/2"	16'-4 7/8"
28	6'-8 15/16"	7'-8 5/8"	16'-5 1/8"

302'-9" SPANS

BUILT DRAWING

STATE OF MARYLAND
STATE ROADS COMMISSION
BALTIMORE, MD.
WM. PRESTON LANE, JR. MEMORIAL BRIDGE
SANDY POINT-KENT ISLAND

FIELD SPLICES - WELDED GIRDERS
302'-9" SPANS & 202'-0" SPANS

SCALE: As Shown DATE: CONTRACT: PB 12-1

(1) AS BUILT DWG J.G.L. 1/76
REVISIONS

J.E. GREINER COMPANY
CONSULTING ENGINEERS
BALTIMORE, MARYLAND

SHEET 12A OF 149

C-1100	MADE BY	CHECKED BY
DESIGN	CPG	HW
DRAWING	BT	ATD
TRACING	JGW	ATD, R.I.S.
QUANTITIES		
IN CHARGE	C.B.M. & S.J.S.	

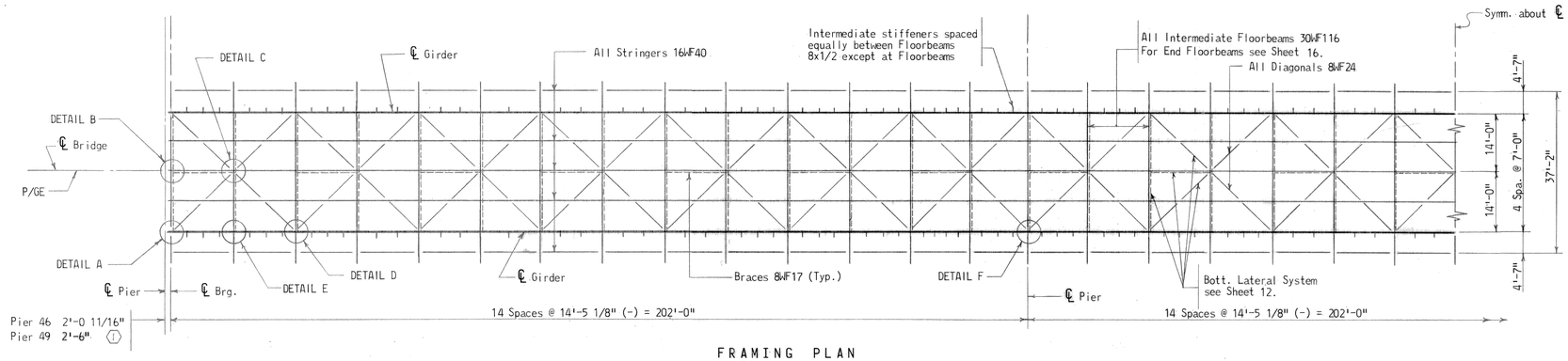

FRAMING PLAN
Scale: 1/16" = 1'-0"

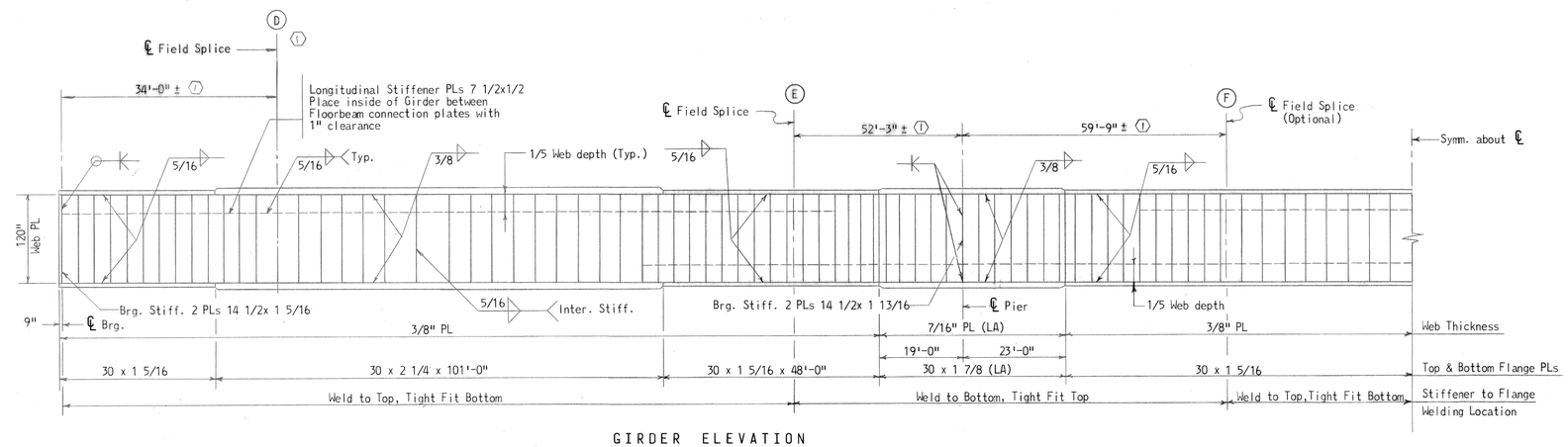

GIRDER ELEVATION
Scale: Horiz.: 1/16" = 1'-0"
Vert. : 1/8" = 1'-0"

Total D.L. Camber	0	.104	.191	.250	.282	.284	.258	.203	.128	.053	0	-.023	-.019	-.002	.015	.021
Superimposed D.L.	0	.010	.018	.024	.027	.027	.025	.020	.012	.005	0	-.002	-.002	-.000	.002	.002
Slab	0	.057	.105	.137	.155	.156	.141	.111	.070	.029	0	-.013	-.011	-.001	.008	.012
Steel	0	.037	.068	.089	.100	.101	.092	.072	.046	.019	0	-.008	-.006	-.001	.005	.007

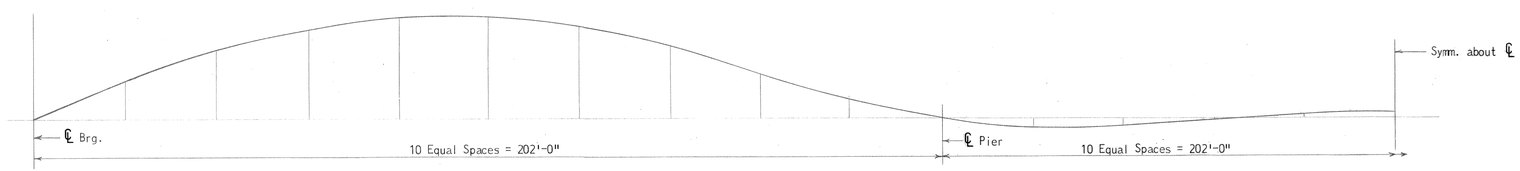

DEAD LOAD CAMBER DIAGRAM
(Camber shown in feet)
Not to Scale

NOTES:

1. For General Notes see Sheet 7.
2. For Other Notes see Sheet 14.
3. For Details A thru F see Sheet 12.
4. For Details of Web and Flange Shop Splice see Sheet 14.
5. For Field Splice Details see Sheet 12.
6. For Shoe Types and locations see Sheet 17.

BUILT DRAWING

STATE OF MARYLAND
STATE ROADS COMMISSION
BALTIMORE, MD.
WM. PRESTON LANE, JR. MEMORIAL BRIDGE
SANDY POINT-KENT ISLAND
CONTINUOUS WELDED GIRDER SPANS
202'-0" SPANS
FRAMING PLAN & STEEL DETAILS

SCALE: As Shown DATE: JULY, 1969 CONTRACT: PB 12-1

(1) AS BUILT DWG J.G.L. 1/76
REVISIONS

J. E. GREINER COMPANY, INC.
CONSULTING ENGINEERS
BALTIMORE, MARYLAND

SHEET 13 OF 149

	MADE BY	CHECKED BY
DESIGN	H.W.	G.P.G.
DRAWING	A.T.O.	A.T.O.
TRACING	W.M.	A.L.D. R.J.S.
QUANTITIES		
IN CHARGE	C.B.M.	S.J.S.

C-1100

For details of railing, brush curb post & deflection plate see Sheet 8.

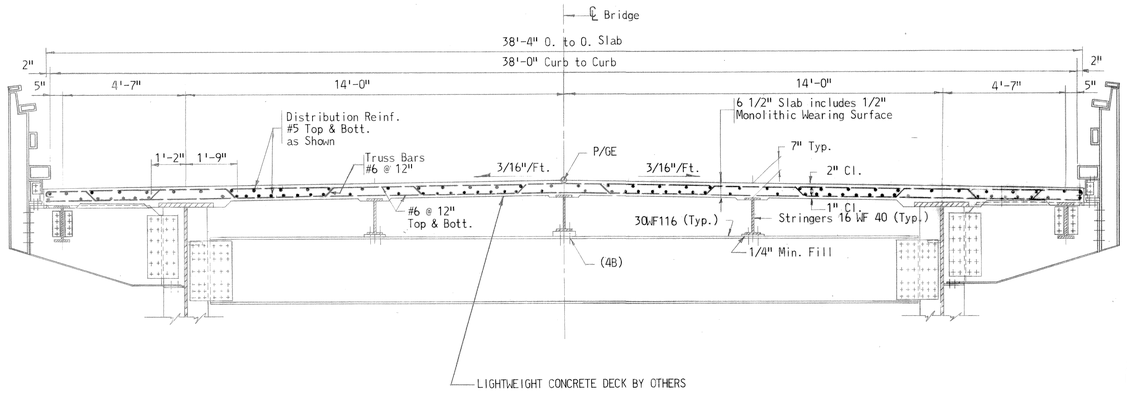

TYPICAL CROSS - SECTION

Scale: 3/8" = 1'-0"

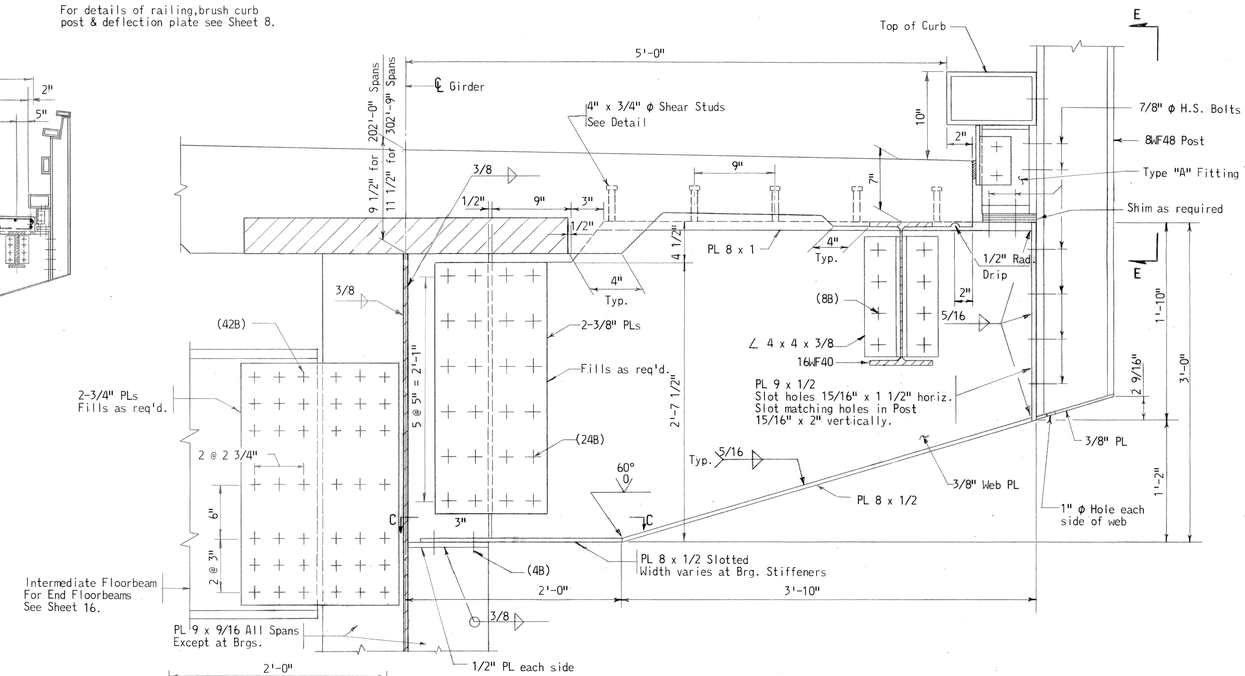

TYPICAL DETAIL
FLOORBEAM. BRACKET & POST CONNECTION

Scale: 1 1/2" = 1'-0"

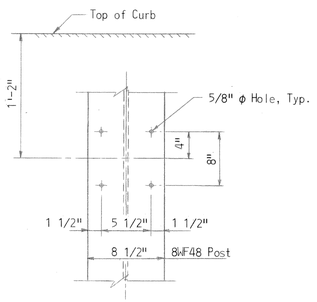

VIEW E-E
PIERS 19-28 & 47-49

Scale: 1 1/2" = 1'-0"

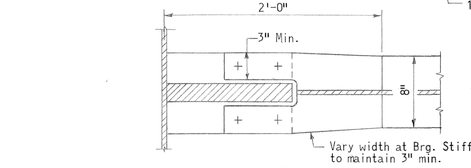

SECTION C-C

Scale: 1 1/2" = 1'-0"

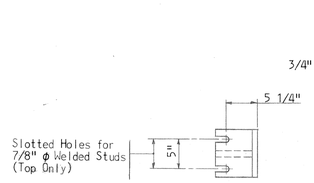

SECTION D-D

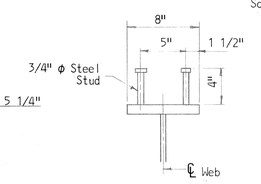

SHEAR STUD DETAIL

Scale: 1 1/2" = 1'-0"

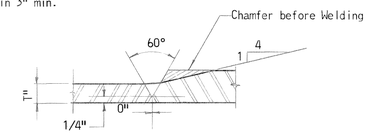

SHOP FLANGE SPLICE DETAIL

Scale: 3/4" = 1'-0"

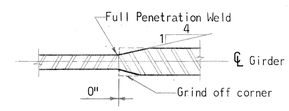

SHOP WEB SPLICE DETAIL

Scale: 3/4" = 1'-0"

NOTE: Welds shall be back gouged and welded after welding far side. Butt welds on girder flange and web plates shall be ground flush, the finish grinding being parallel to the direction of stress.

NOTES - CONTRACT PB 12-1

1. For General Notes see Sheet 7.
2. Dimensions shown are measured horizontally between bearings @ 68°F. All Bearing and Intermediate Stiffeners are normal to grade.
3. Girders shall be cambered for dead load deflections, vertical curve corrections and superelevation transitions. Deflections shown on the Camber Diagrams are measured from a chord line between ℄ of Bearings.
4. For Profile Grade Elevations and Superelevation see Sheets 4 & 6.
5. For Inspection Walkways see Sheet 20.
6. Special care shall be taken to properly maintain the curvature of girders for Spans 20 to 28 during fabrication and erection. The curvature of the girders shall be obtained by cutting of the flange plates during fabrication or by a heat bending method approved by the Engineer.

AS BUILT DRAWING

LOCATION	DIMEN. "A"
Piers 22 & 25	7 5/8"
Piers 28 & 46	8 1/4"

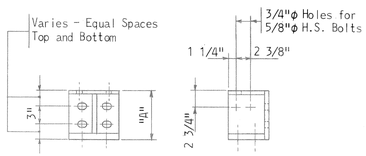

Notes: 1. For Dimensions and Sizes not shown, see Type "A" Fitting
2. At Expansion Dam Locations, Welded Post Fitting to be used in lieu of Type "A" Fitting.

WELDED POST FITTING
AT EXPANSION DAMS

Scale: 1" = 1'-0"

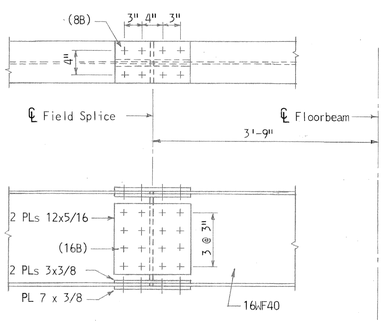

STRINGER FIELD SPLICE

Scale: 1" = 1'-0"

Minimum Length of Stringer shall be 3 Panels

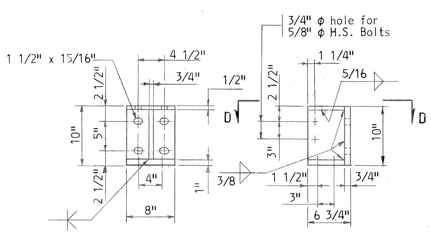

TYPE "A" FITTING

Scale: 1" = 1'-0"

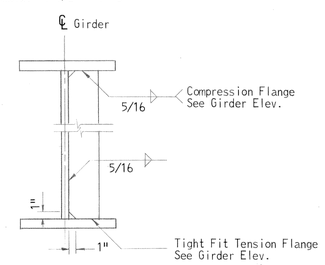

TYPICAL STIFFENER DETAIL

Scale: 1" = 1'-0"

REVISIONS

STATE OF MARYLAND
STATE ROADS COMMISSION
BALTIMORE, MD.

WM. PRESTON LANE, JR. MEMORIAL BRIDGE
SANDY POINT-KENT ISLAND
CONTINUOUS WELDED GIRDER SPANS

MISCELLANEOUS DETAILS

SCALE: As Shown DATE: JULY, 1969 CONTRACT: PB 12-1

J. E. GREINER COMPANY, INC.
CONSULTING ENGINEERS
BALTIMORE, MARYLAND

	MADE BY	CHECKED BY
C-1100		
DESIGN	E.P.P.	A.E.D.
DRAWING	A.G.W.	A.E.D.
TRACING	V.G.W.	A.E.D.
QUANTITIES		
IN CHARGE	S.B.M. & S.J.S.	

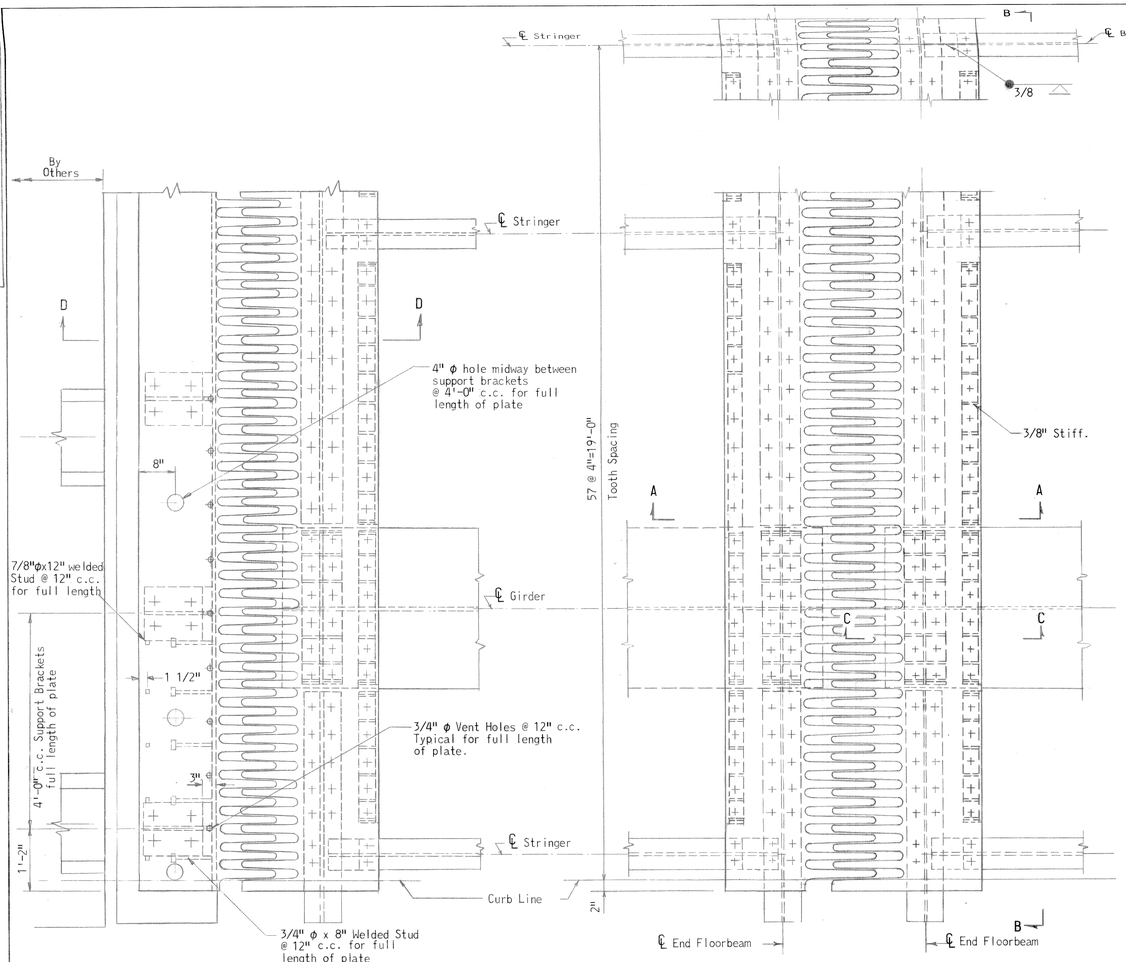

PLAN OF DAM - PIER 19 & 49 △1

(Pier 19 Shown)

PLAN OF TYPICAL PIER DAM

(Pier 22 Shown)

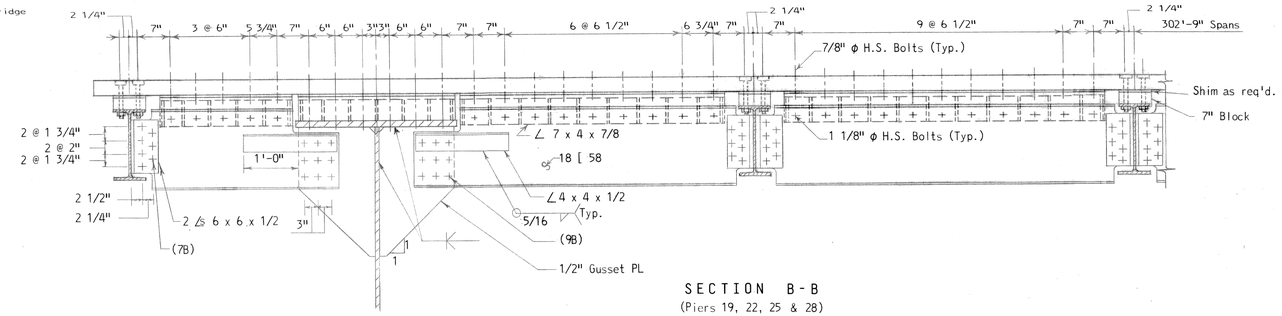

SECTION B-B

(Piers 19, 22, 25 & 28)

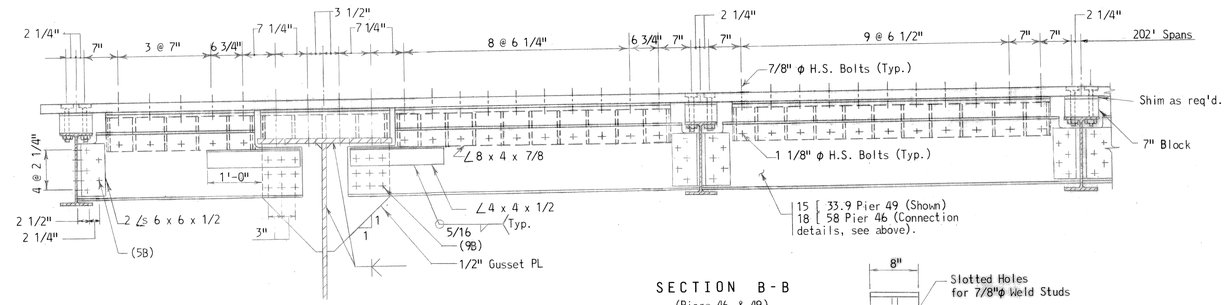

SECTION B-B

(Piers 46 & 49)

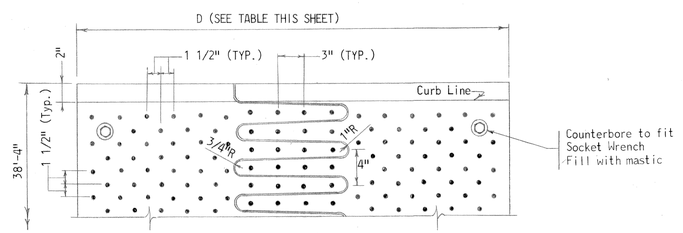

WELD PATTERN DETAIL

Scale: 1 1/2" = 1'-0"

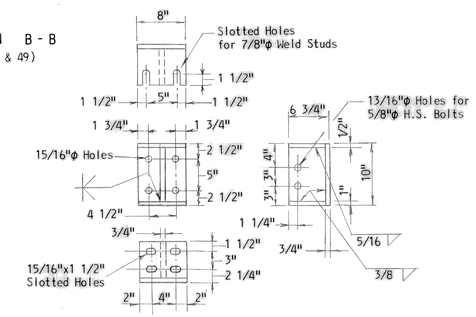

TYPE "G" FITTING

Scale: 1" = 1'-0"

(2)

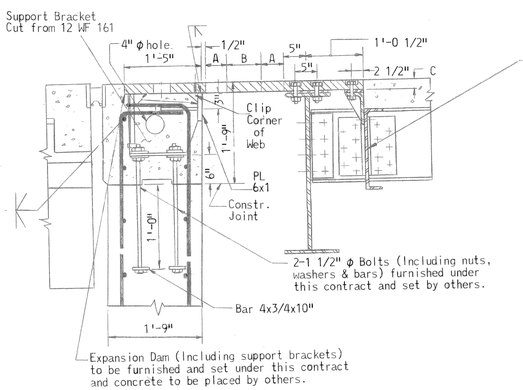

SECTION D-D △1

NOTE: Studs on Expansion Dam PL made with an electrode melting inside of a refactory ferrule 1/8" in height, approx. 1/2" in dia.

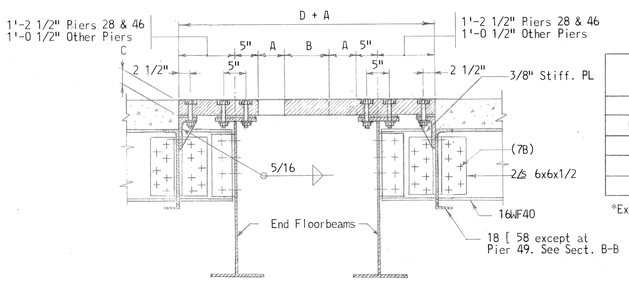

SECTION A-A

LOCATION	DIMENSION			
	A	B	C	D
Pier 19	(2) 3 1/8"	8"	2 3/4"	4'-0"
Piers 22 & 25	9"	13"	4"	4'-9"
Pier 28	*	*	4 3/4"	*
Pier 46	*	*	4 1/2"	*
Pier 49	(2) 4"	6 1/2"	2"	3'-8 1/2"

*Expansion Dam Plate not included in this Contract

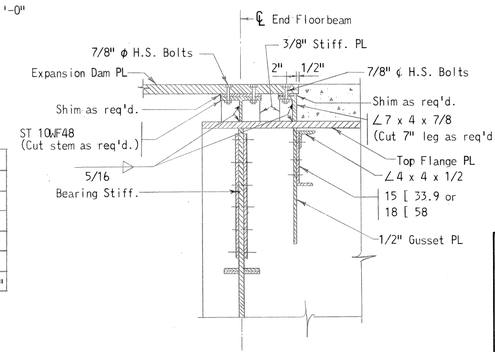

SECTION C-C

NOTES:

1. For General Notes see Sheet 7.
2. For Other Notes see Sheet 14.
3. Number of 7/8" ϕ H.S. Bolts shown thus (12B).

AS BUILT DRAWING

STATE OF MARYLAND
STATE ROADS COMMISSION
BALTIMORE, MD.
WM. PRESTON LANE, JR. MEMORIAL BRIDGE
SANDY POINT-KENT ISLAND
CONTINUOUS WELDED GIRDER SPANS

EXPANSION DAMS

REVISIONS	
(2) AS BUILT DWG. J.G.L. 11-11-74	
(1) P.A.G. 11/22/70	

SCALE: 3/4"=1'-0" or As Shown DATE: JULY, 1969 CONTRACT: PB 12-1

J.E. GREINER COMPANY, INC.
CONSULTING ENGINEERS
BALTIMORE, MARYLAND

SHEET 15 OF 149

C-1100
DESIGN
DRAWING
TRACING
QUANTITIES
IN CHARGE
MADE BY
CHECKED

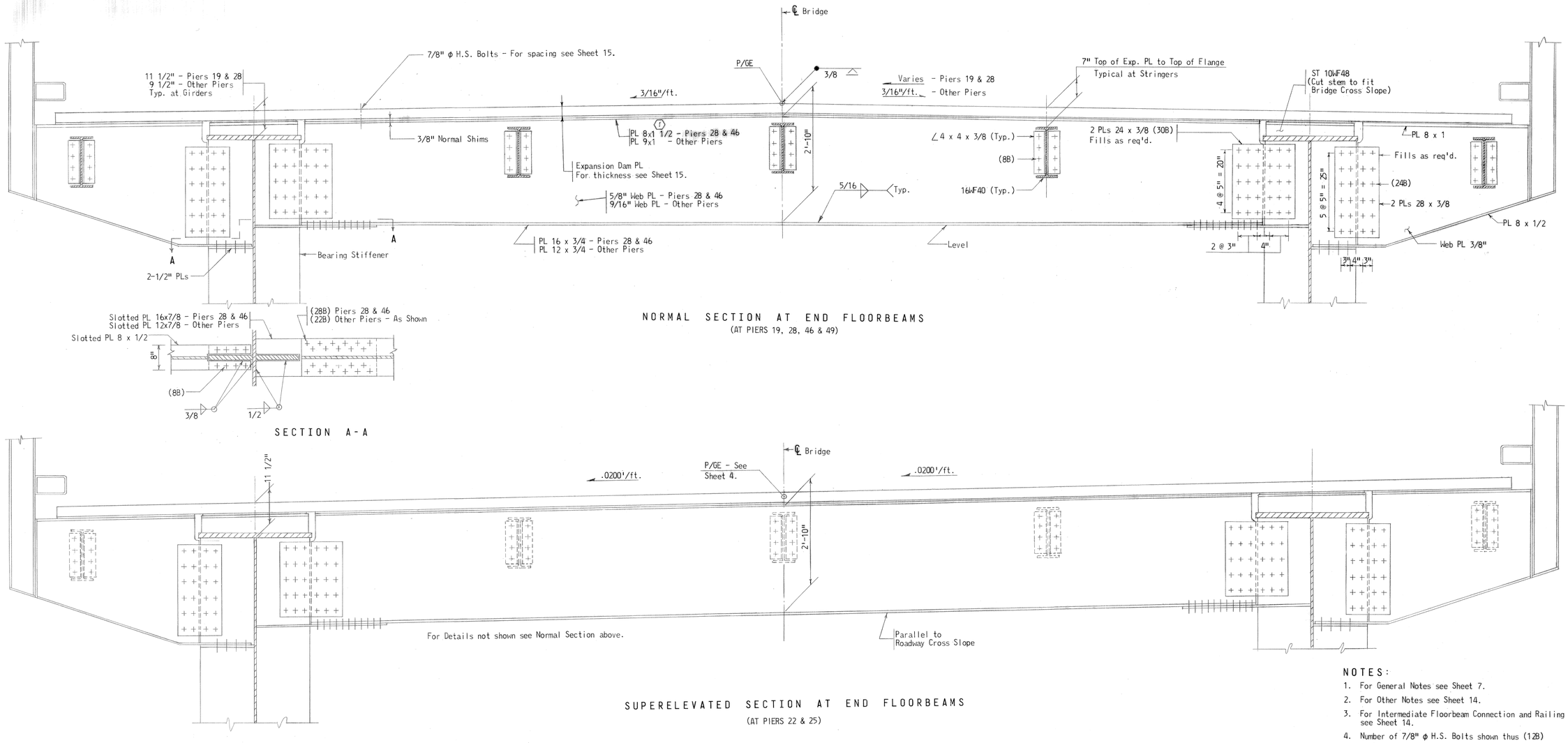

NORMAL SECTION AT END FLOORBEAMS
(AT PIERS 19, 28, 46 & 49)

SUPERELEVATED SECTION AT END FLOORBEAMS
(AT PIERS 22 & 25)

NOTES:

1. For General Notes see Sheet 7.
2. For Other Notes see Sheet 14.
3. For Intermediate Floorbeam Connection and Railing Support see Sheet 14.
4. Number of 7/8" ϕ H.S. Bolts shown thus (12B)

AS BUILT DRAWING

STATE OF MARYLAND
STATE ROADS COMMISSION
BALTIMORE, MD.
WM. PRESTON LANE, JR. MEMORIAL BRIDGE
SANDY POINT–KENT ISLAND
CONTINUOUS WELDED GIRDER SPANS

END FLOORBEAM DETAILS

SCALE: 3/4" = 1'-0" DATE: JULY, 1969 CONTRACT: PB 12-1

J. E. GREINER COMPANY, INC.
CONSULTING ENGINEERS
BALTIMORE, MARYLAND

SHEET 16 OF 149

1 AS BUILT DWG. J. G. L. 11-11-74
REVISIONS

CHECKED BY	J.K.
DESIGN	P.J.G. 2/68
DRAWING	M.S.
TRACING	P.J.G.
QUANTITIES	M.S.
IN CHARGE	C.B.M.&S.J.S.
MADE BY	W.E.I.

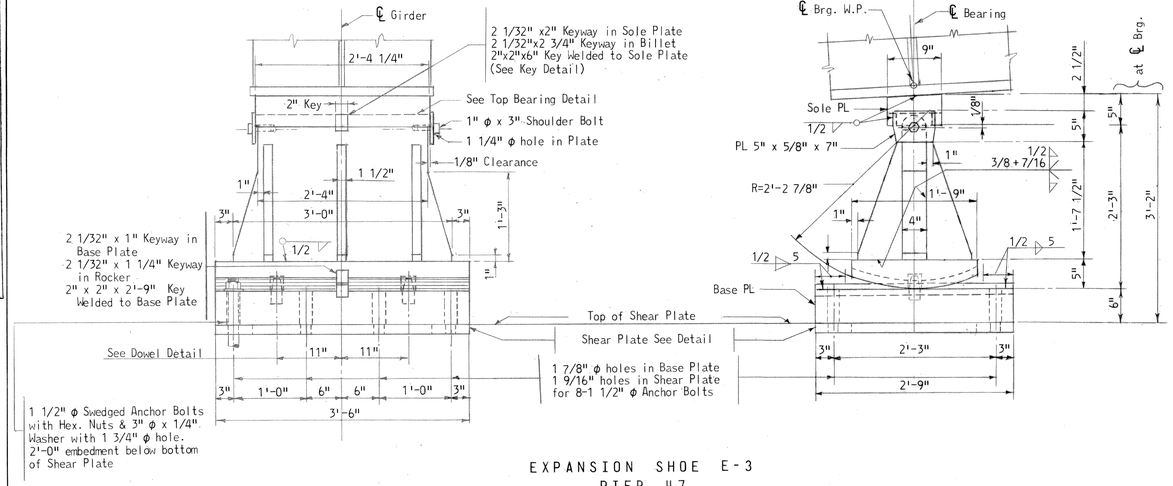

EXPANSION SHOE E-3
PIER 47

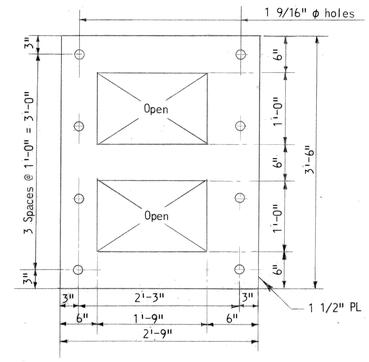

SHEAR PLATE DETAIL E-3

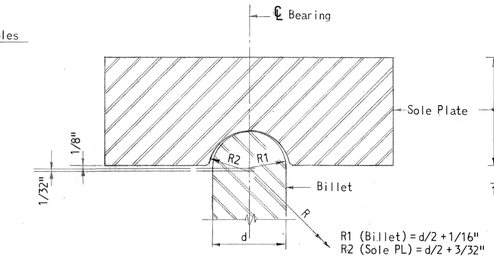

TOP BEARING DETAIL
No Scale

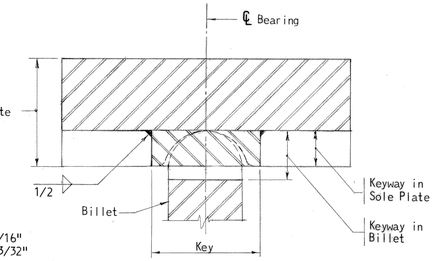

KEY DETAIL
No Scale

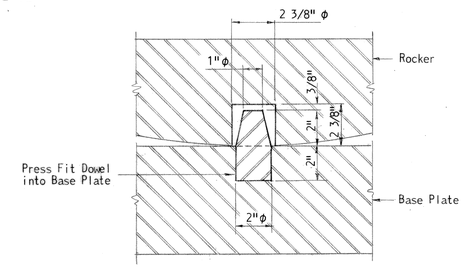

DOWEL DETAIL
Scale: 3" = 1'-0"

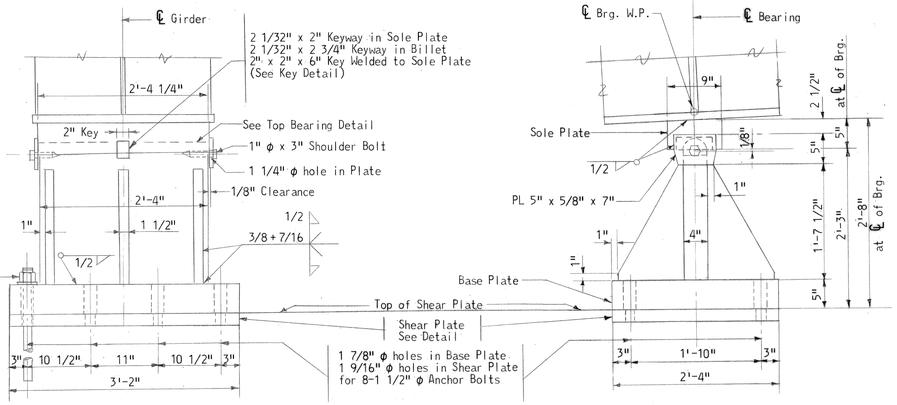

FIXED SHOE F-2
PIER 48

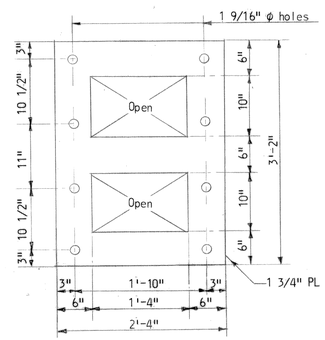

SHEAR PLATE DETAIL F-2

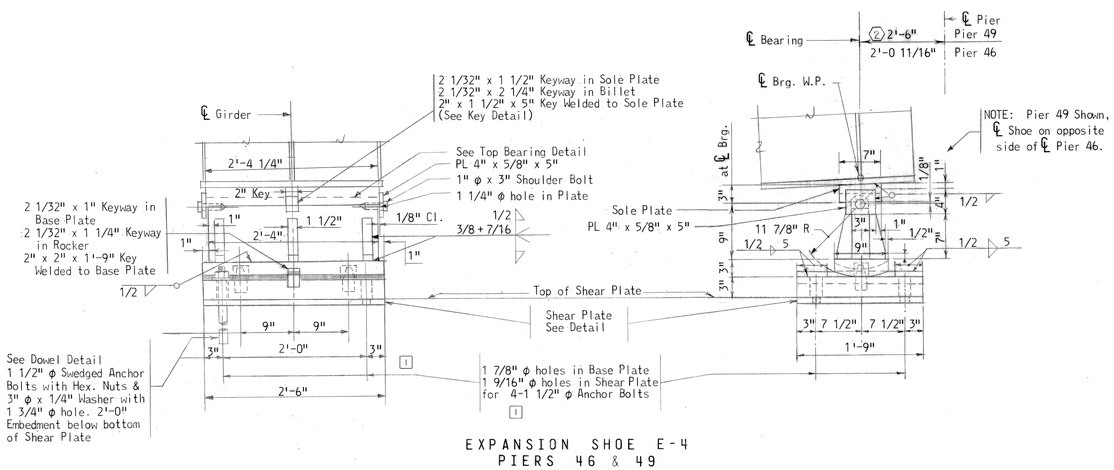

EXPANSION SHOE E-4
PIERS 46 & 49

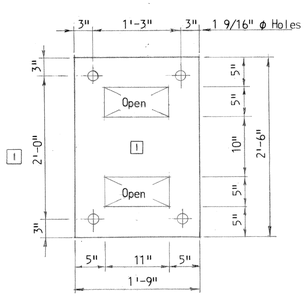

SHEAR PLATE DETAIL E-4

NOTES:

1. For General Notes see Sheet 7.
2. For Other Notes see Sheet 14.
3. For Bearing Pad Details see Sheet 107.
4. All Steel except Bolts shall meet the requirements of A.S.T.M. A-36
5. Shoulder Bolts and Anchor Bolts shall meet the requirements of A.S.T.M. A-307

AS BUILT DRAWING

STATE OF MARYLAND
STATE ROADS COMMISSION
BALTIMORE, MD.
WM. PRESTON LANE, JR. MEMORIAL BRIDGE
SANDY POINT-KENT ISLAND
CONTINUOUS WELDED GIRDER SPANS

SHOES-I

2 AS BUILT DWG. J.G.L. 11-11-74	SCALE: 1" = 1'-0" & As Shown DATE: JULY, 1969 CONTRACT: PB 12-1
1 S.J.S. 10/23/69	J.E. GREINER COMPANY, INC. CONSULTING ENGINEERS BALTIMORE, MARYLAND
REVISIONS	SHEET 17 OF 149

C-1100	MADE BY	CHECKED BY
DESIGN	S.G.J.	R.J.G.
DRAWING	R.J.G.	R.J.G.
TRACING	W.C.L.	R.J.G.
QUANTITIES		
IN CHARGE	C.S.M.	S.J.S.

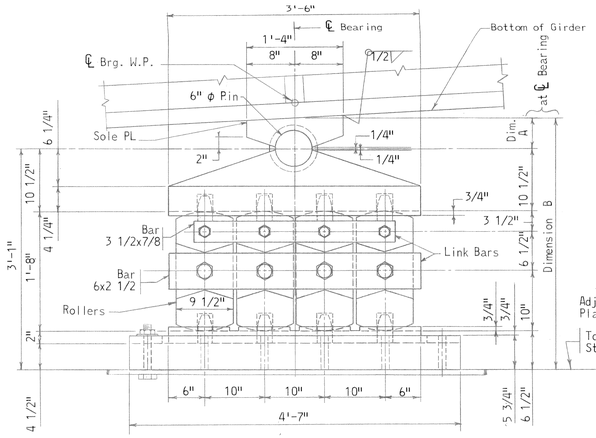

EXPANSION SHOE E-5

Scale: 1" = 1'-0"

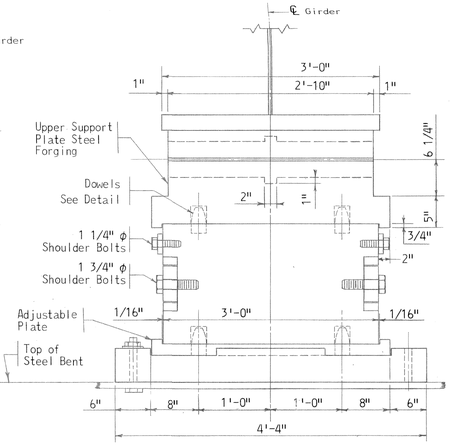

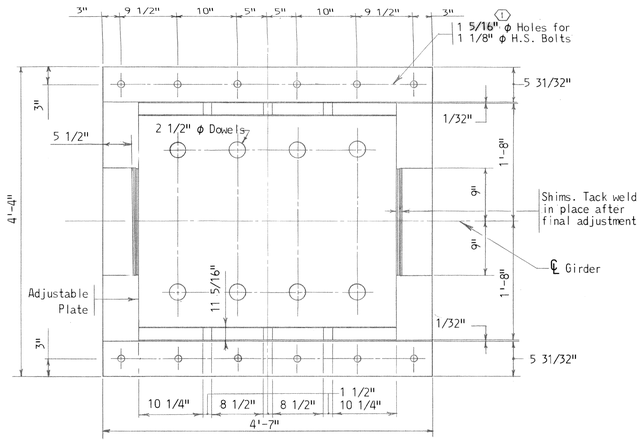

PLATE BASE E-5

Scale: 1" = 1'-0"

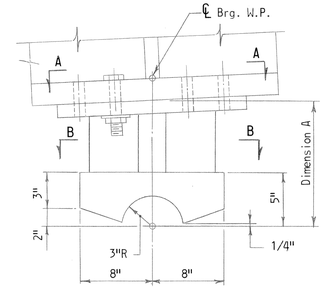

ELEVATION E-5

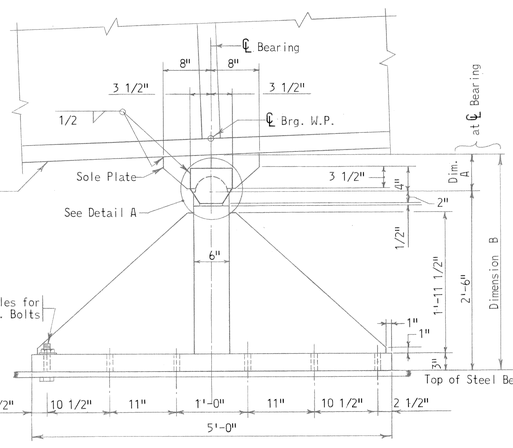

FIXED SHOE F-3

Scale: 1" = 1'-0"

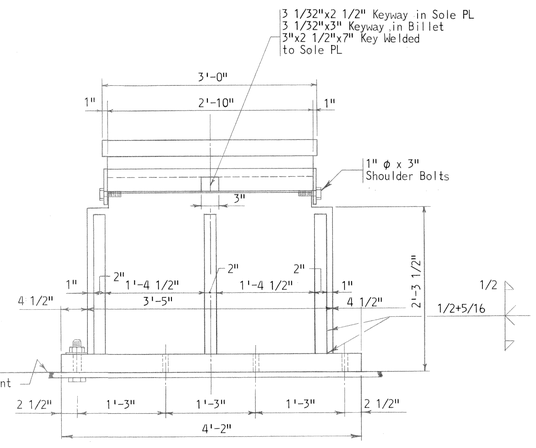

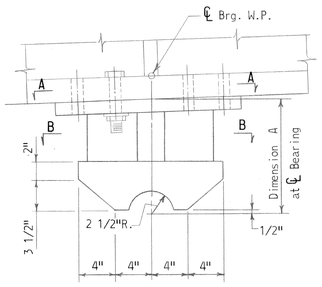

ELEVATION F-3

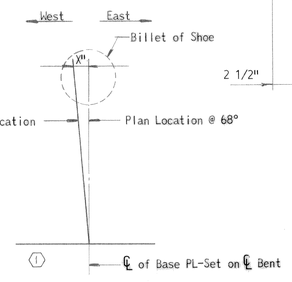

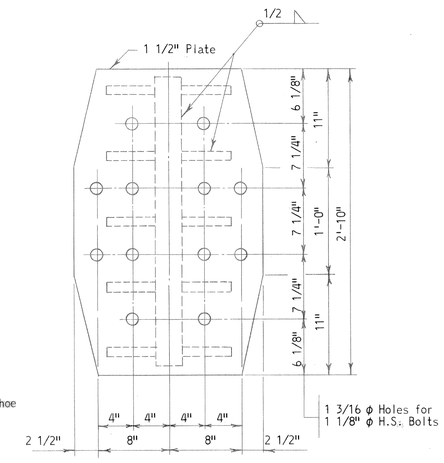

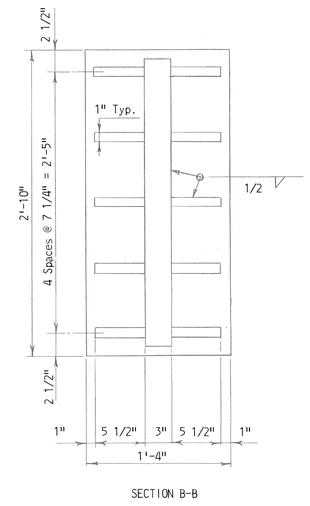

SPECIAL SOLE PLATES F-3 & E-5

Scale: 1 1/2" = 1'-0"

NOTES:

1. For General Notes see Sheet 7.
2. For Other Notes see Sheet 14.
3. For material for Shoes E-5 see Sheet 19.
4. All steel for Shoes F-3, except bolts, to be ASTM A-36.

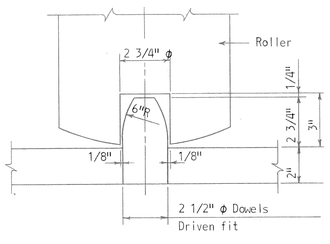

DOWEL DETAIL

Scale: 3" = 1'-0"

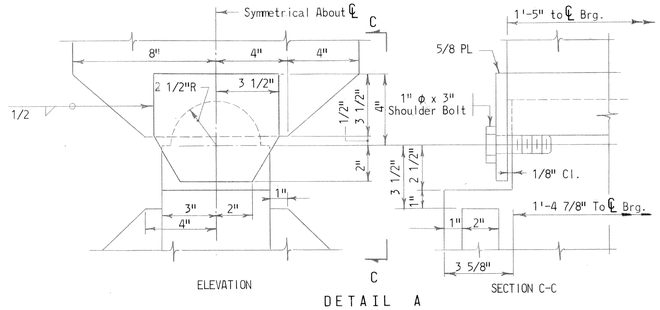

DETAIL A

Scale: 3" = 1'-0"

TABLE OF SHOE LOCATIONS & HEIGHTS							① AS BUILT DIMENSION X	
		TYPE OF	NORTH GIRDER		SOUTH GIRDER			
PIER	SPAN	SHOE	DIMENSION A	DIMENSION B	DIMENSION A	DIMENSION B	N. GIRDER	S. GIRDER
19	20	E-6	5 5/8"	3'-6 5/8"	8 3/8"	3'-9 3/8"	0	1 1/8 W
20		E-5	5"	3'-6"	11 3/4" *	4'-0 3/4"	5/8" W	0
21		F-3	6"	3'-6"	1'-0 3/4" *	3'-6 3/4"	0	0
22	22	E-6	4 3/4"	3'-5 3/4"	11 1/2" *	4'-0 1/2"	1/4" W	3/8" W
22	23	E-6	6 1/4"	3'-7 1/4"	1'-1" *	4'-2"	1/2" E	1/2" E
23		F-3	6"	3'-0"	1'-0 3/4" *	3'-6 3/4"	0	0
24		E-5	5"	3'-6"	11 3/4" *	4'-0 3/4"	5/8" E	5/8" E
25	25	E-6	4 3/4"	3'-5 3/4"	11 1/2" *	4'-0 1/2"	1/16" W	0
25	26	E-6	6 1/4"	3'-7 1/4"	1'-1" *	4'-2"	1/8" E	1/8" E
26		F-3	6 1/8"	3'-0 1/8"	1'-0 7/8" *	3'-6 7/8"	0	0
27		E-5	5"	3'-6"	11 3/4" *	4'-0 3/4"	1/2" E	1/4" E
28	28	E-6	4 3/4"	3'-5 3/4"	9 1/2"	3'-10 1/2"	5/8" W	5/8" W

* Special Sole Plate

AS BUILT DRAWING

STATE OF MARYLAND
STATE ROADS COMMISSION
BALTIMORE, MD.
WM. PRESTON LANE, JR. MEMORIAL BRIDGE
SANDY POINT-KENT ISLAND
CONTINUOUS WELDED GIRDER SPANS

SHOES-II

SCALE: As Shown DATE: JULY, 1969 CONTRACT: PB 12-1

① AS BUILT DWG. J.G.L. 11-11-74

REVISIONS

J.E. GREINER COMPANY, INC.
CONSULTING ENGINEERS
BALTIMORE, MARYLAND

SHEET 18 OF 149

C-1100	MADE BY	CHECKED BY
DESIGN	CR	PvdG
DRAWING	WGL	PvdG
TRACING	WGL	PvdG, R.I.S.
QUANTITIES		
IN CHARGE	C.B.M. & S.J.S.	

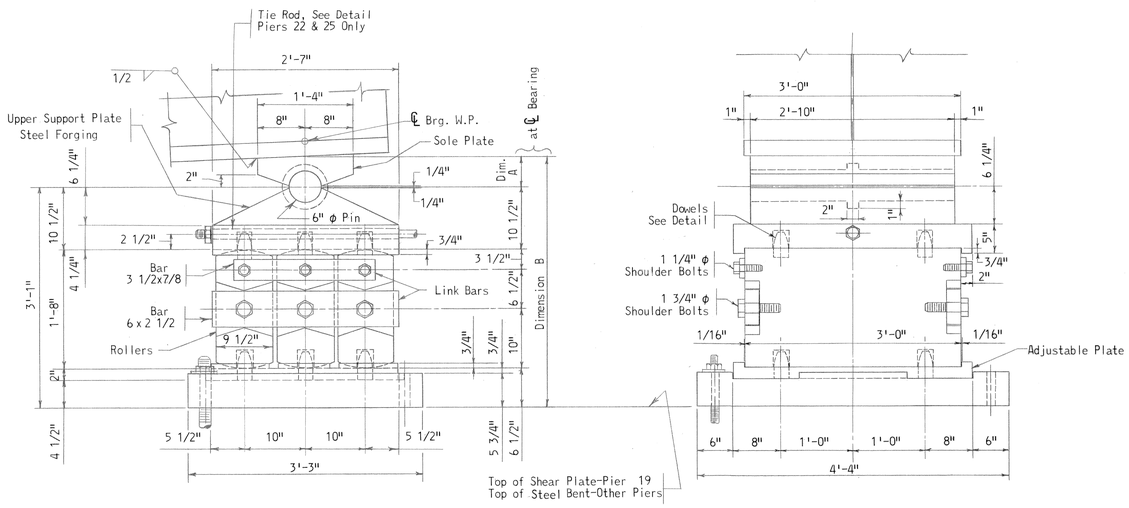

EXPANSION SHOE E-6

Scale: 1" = 1'-0"

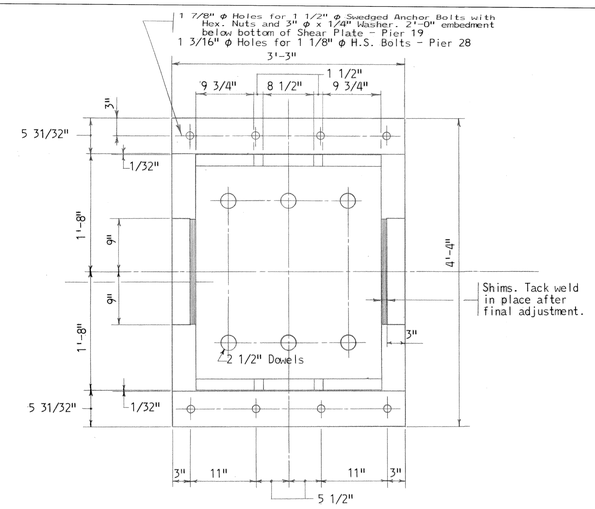

BASE PLATE E-6

PIERS 19 & 28

Scale: 1" = 1'-0"

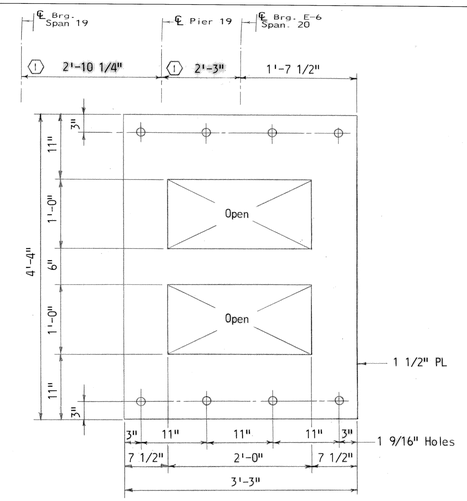

SHEAR PLATE DETAIL

PIER 19

Scale: 1" = 1'-0"

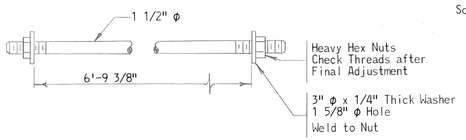

DETAIL OF TIE ROD

PIERS 22 & 25

No Scale

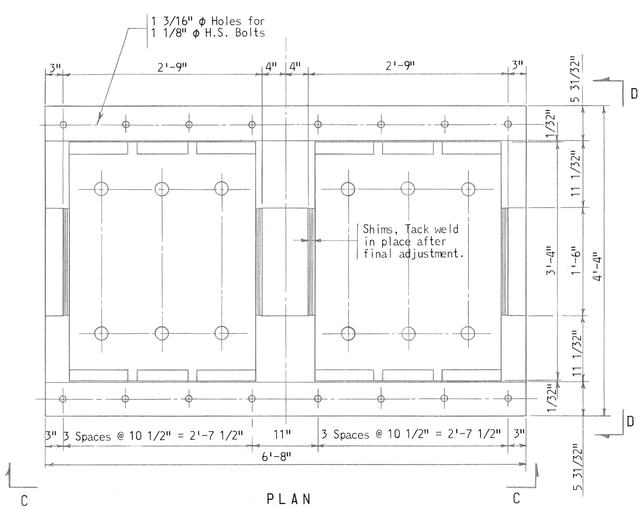

PLAN

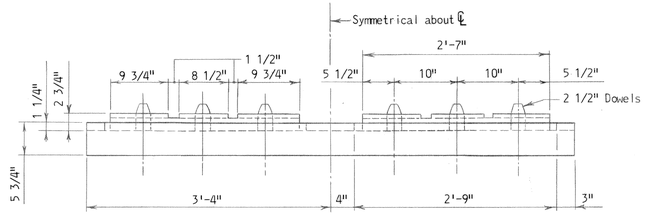

VIEW C-C

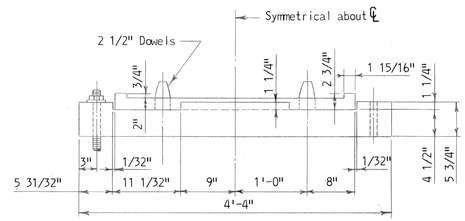

VIEW D-D

BASE PLATE E-6

PIERS 22 & 25

Scale: 1" = 1'-0"

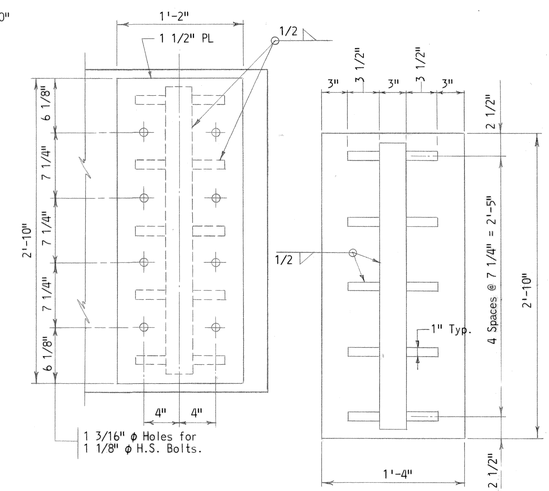

SECTION A-A

SECTION B-B

SPECIAL SOLE PLATE E-6

Scale: 1 1/2" = 1'-0"

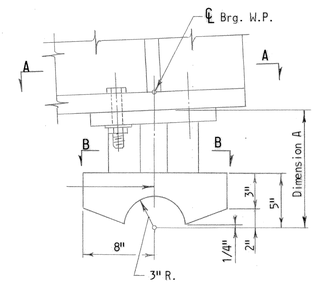

ELEVATION

NOTES:

1. For General Notes see Sheet 7.
2. For Other Notes see Sheet 14.
3. For Dowel Detail and Table of Dimensions A & B and Shoe Locations see Sheet 18.

MATERIAL FOR SHOES E-5 & E-6

Upper Support Plates - ASTM A-237, Class A
Rollers, Dowels, Adjustable Plate and 6" ϕ Pins - ASTM A-235, Class G

Sole Plates, Special Sole Plates, Base Plates, Shear Plates and Link Bars - ASTM A-36

Shoulder Bolts, Anchor Bolts and Tie Rods- ASTM A-307

AS BUILT DRAWING

STATE OF MARYLAND
STATE ROADS COMMISSION
BALTIMORE, MD.
WM. PRESTON LANE, JR. MEMORIAL BRIDGE
SANDY POINT-KENT ISLAND
CONTINUOUS WELDED GIRDER SPANS

SHOES - III

SCALE: As Shown DATE: JULY, 1969 CONTRACT: PB 12-1

J.E. GREINER COMPANY, INC.
CONSULTING ENGINEERS
BALTIMORE, MARYLAND

SHEET 19 OF 149

① AS BUILT DWG. J.G.L. 11-11-74

REVISIONS

	MADE BY	CHECKED BY
DESIGN	P.G.T.	R.J.S.
DRAWING	C.E.S. & P.G.T.	R.J.S.
TRACING	C.E.S.	R.J.S.
QUANTITIES		
IN CHARGE	C.G.M. & S.J.S.	

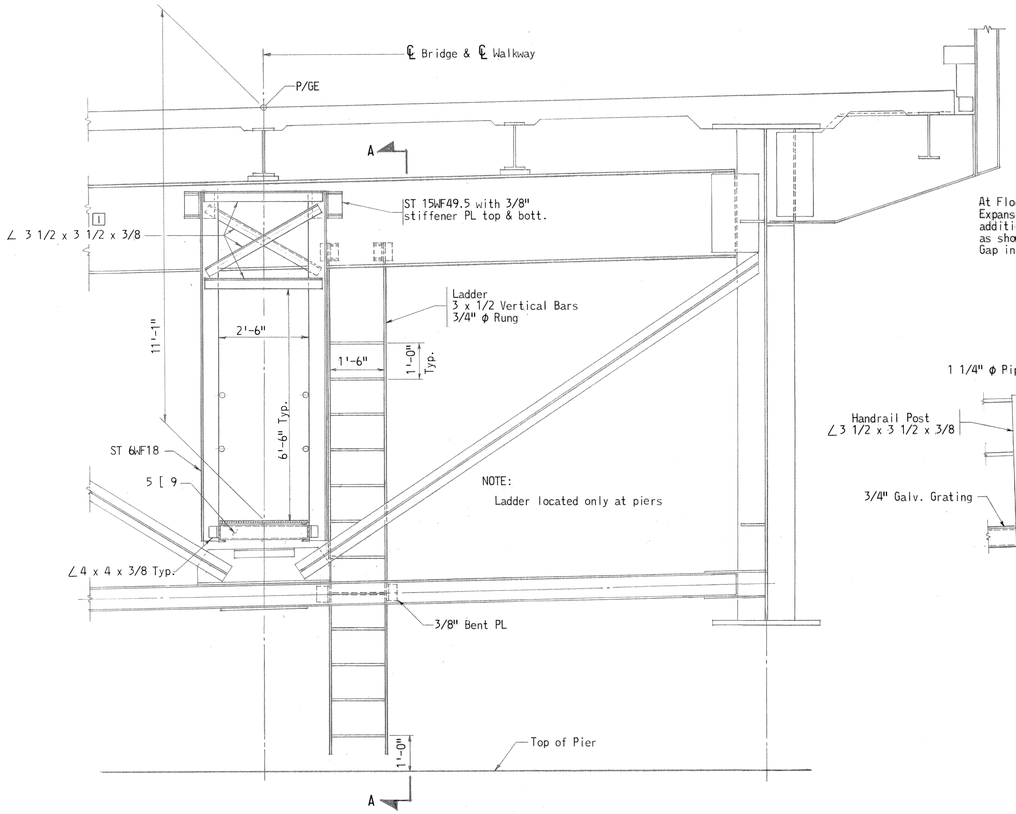

TYPICAL WALKWAY & LADDER DETAIL - 302'-9" GIRDER SPANS

Scale: 1/2" = 1'-0"

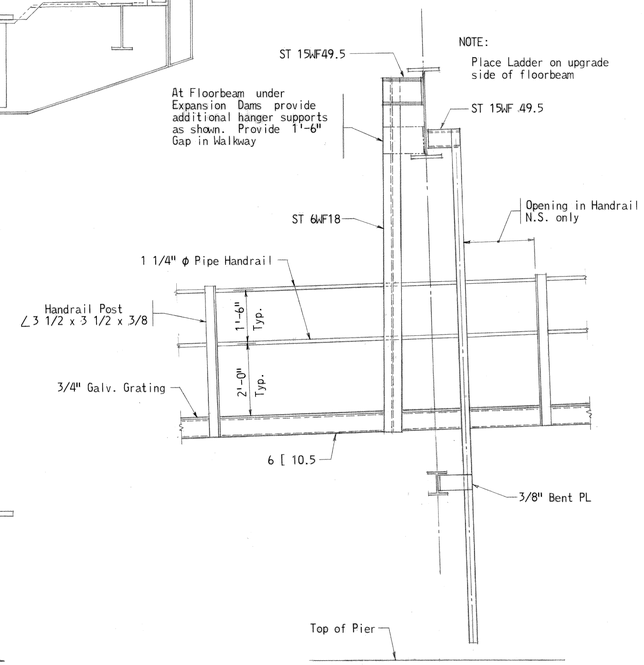

SECTION A-A

Scale: 1/2" = 1'-0"

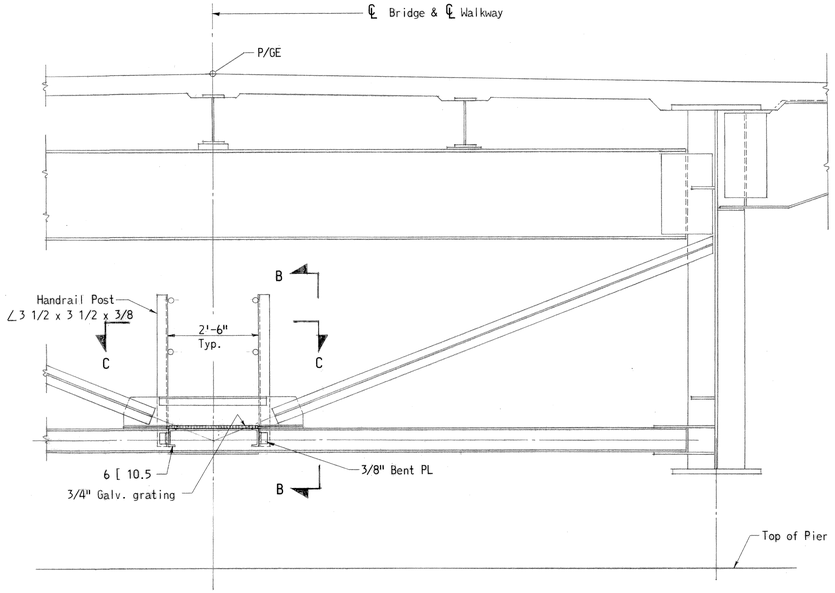

TYPICAL WALKWAY & LADDER DETAIL - 202'-0" GIRDER SPANS

Scale: 1/2" = 1'-0"

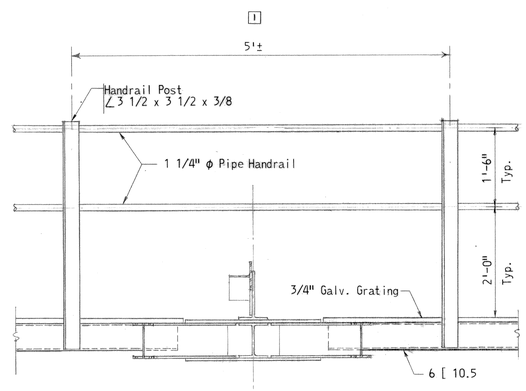

SECTION B-B

Scale: 3/4" = 1'-0"

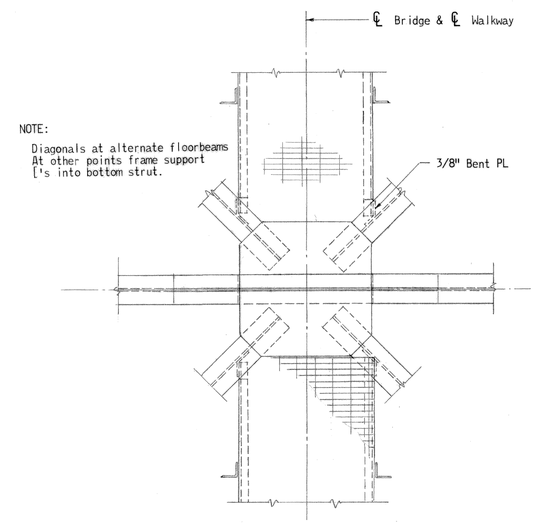

SECTION C-C

Scale: 3/4" = 1'-0"

NOTES:

1. For General Notes see Sheet 7.
2. All Bolts shall be 3/4" φ ASTM A325 High Strength Bolts.
3. The flooring for all walkways shall be galvanized grating with 3/4 x 3/16 bearing bars unless otherwise noted.
4. Live Load on walkways and platforms 100 p.s.f.
5. At Expansion Dams provide 5/16" sliding floor plate to cover gap in walkway. Provide sleeves in handrail.

AS BUILT DRAWING

STATE OF MARYLAND
STATE ROADS COMMISSION
BALTIMORE, MD.
WM. PRESTON LANE, JR. MEMORIAL BRIDGE
SANDY POINT–KENT ISLAND
CONTINUOUS WELDED GIRDER SPANS
INSPECTION WALKWAY DETAILS

SCALE: As Shown DATE: JULY, 1969 CONTRACT: PB 12-1

1 S.J.S. 10/23/69
REVISIONS

J.E. GREINER COMPANY, INC.
CONSULTING ENGINEERS
BALTIMORE, MARYLAND

SHEET 20 OF 149

C-1100	MADE BY	CHECKED BY
DESIGN	P.G.T.	C.D.S.
DRAWING	A.J.S.	C.R.
TRACING	A.J.S.	C.R.
QUANTITIES	P.G.T.	R.G.W.
IN CHARGE	G.B.M.	J.W.H.

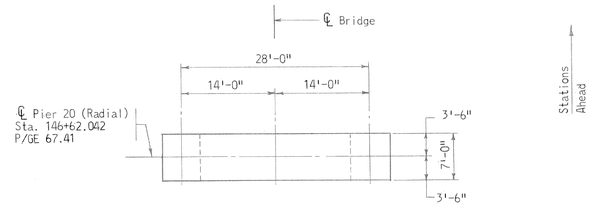

PLAN

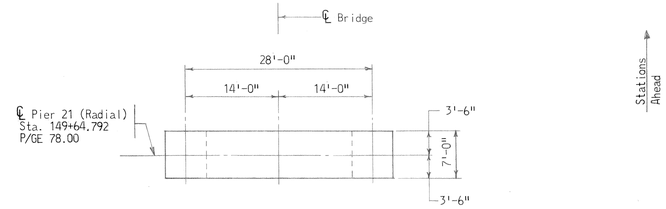

PLAN

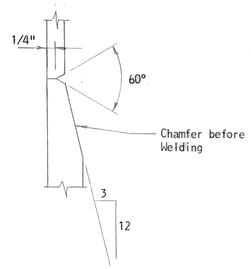

DETAIL A
Scale: None
(1)

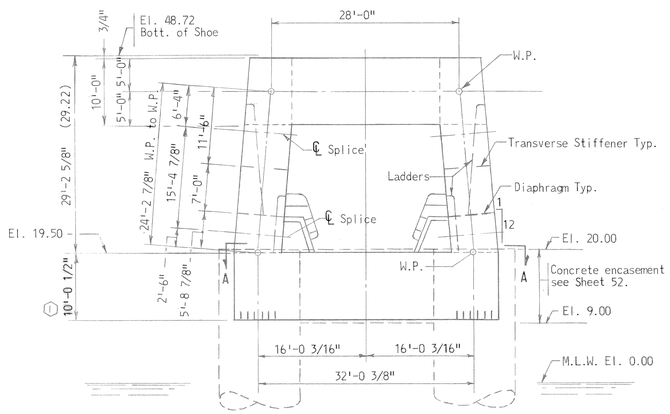

FRONT ELEVATION

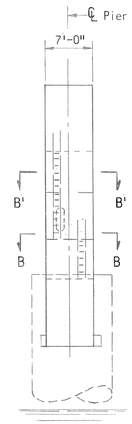

SIDE ELEVATION

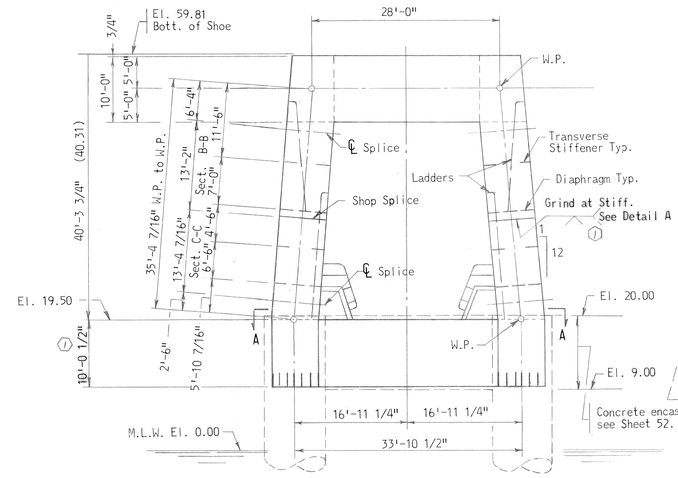

FRONT ELEVATION

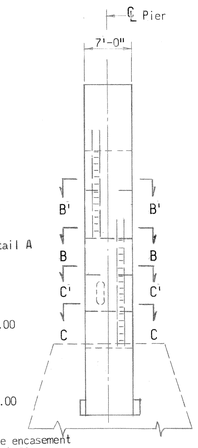

SIDE ELEVATION

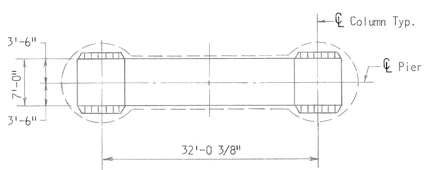

SECTION A-A

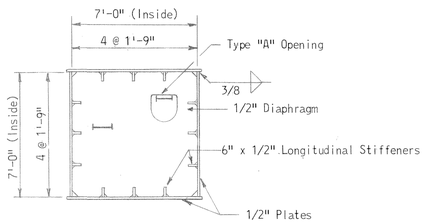

SECTION B-B
Scale: 1/4" = 1'-0"

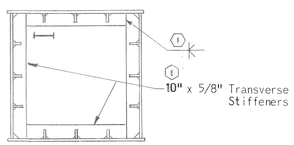

SECTION B'-B'
Scale: 1/4" = 1'-0"

STEEL BENT 20

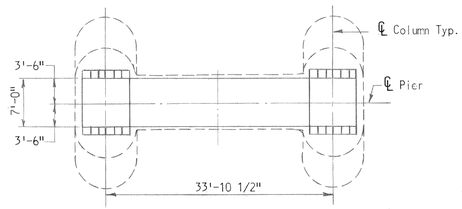

SECTION A-A

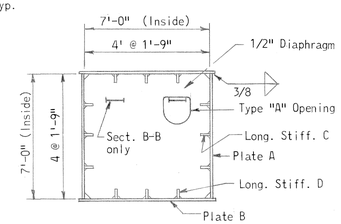

SECTION B-B & C-C
Scale: 1/4" = 1'-0"

MATERIAL TABLE

Member	Section B-B & B'-B'	Section C-C & C'-C'
Plate A	1/2"	1"
Plate B	1/2"	1/2"
Long. Stiff. C	6" x 1/2"	9" x 3/4"
Long. Stiff. D	6" x 1/2"	6" x 1/2"
Transv.Stiff. E	(1) 10" x 5/8"	12 1/2" x 7/8" (1)
Transv.Stiff. F	(1) 10" x 5/8"	10" x 5/8" (1)

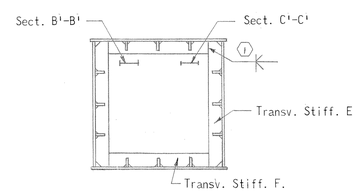

SECTION B'-B' & C'-C'
Scale: 1/4" = 1'-0"

STEEL BENT 21

NOTES:

1. For General Notes see Sheet 7.
2. For Shoe Details see Sheet 18.
3. For Details at Top see Sheet 31.
4. For Details at Bottom see Sheet 38 and 39.
5. For Miscellaneous Details see Sheets 48 through 51.

AS BUILT DRAWING

STATE OF MARYLAND
STATE ROADS COMMISSION
BALTIMORE, MD.
WM. PRESTON LANE, JR. MEMORIAL BRIDGE
SANDY POINT-KENT ISLAND

PLAN & ELEVATIONS
STEEL BENTS 20 & 21

SCALE: 3/32"=1'-0" & As Shown | DATE: JULY, 1969 | CONTRACT: PB 12-1

(1) AS BUILT DWG. J.G.L. 1/76
REVISIONS

J. E. GREINER COMPANY, INC.
CONSULTING ENGINEERS
BALTIMORE, MARYLAND

SHEET 21 OF 149

C-1100	MADE BY	CHECKED BY
DESIGN	R.G.T.	D.L.R.
DRAWING	T.G.	C.E.R.
TRACING	T.G.	R.G.W.
QUANTITIES	R.G.W.	J.W.H.
IN CHARGE	C.B.W.	

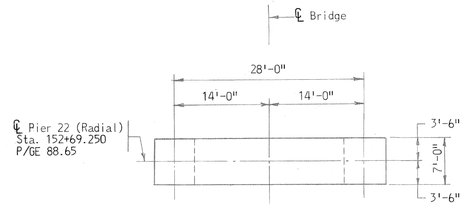

PLAN

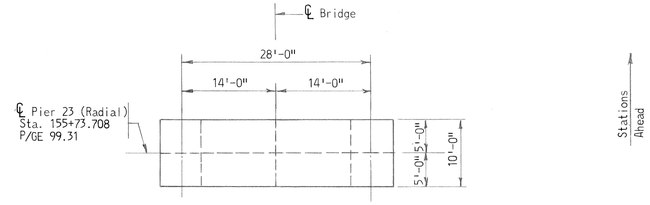

PLAN

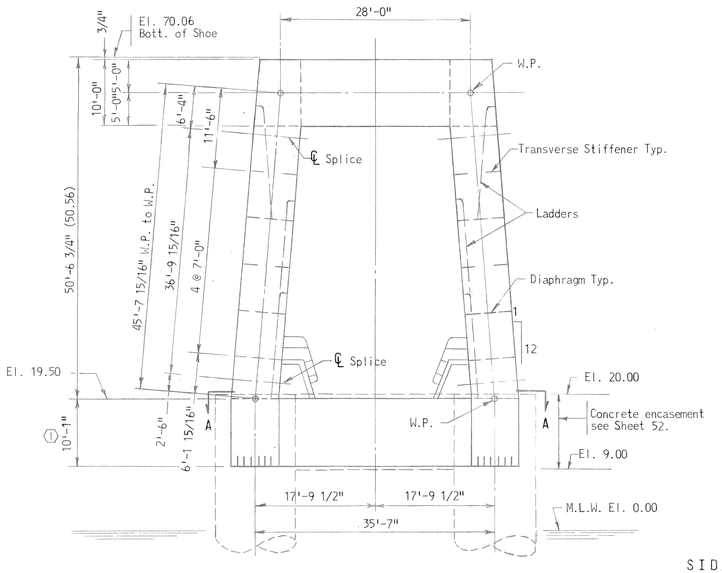

FRONT ELEVATION

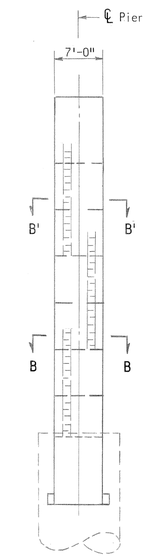

SIDE ELEVATION

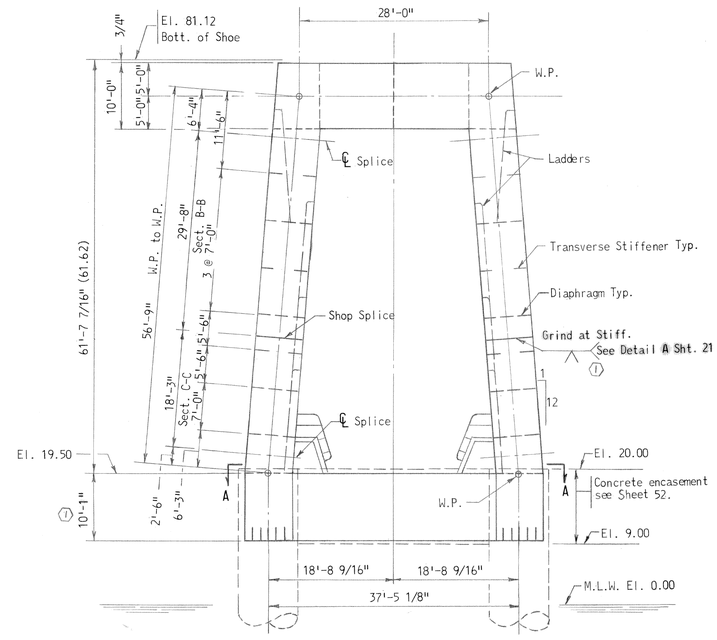

FRONT ELEVATION

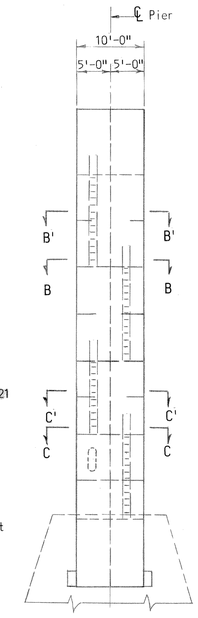

SIDE ELEVATION

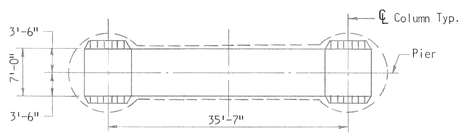

SECTION A-A

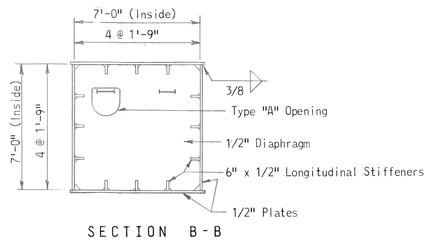

SECTION B-B
Scale: 1/4" = 1'-0"

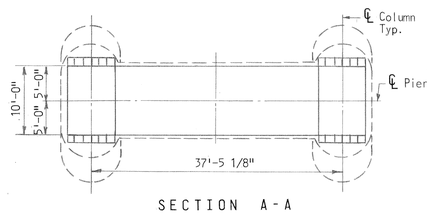

SECTION A-A

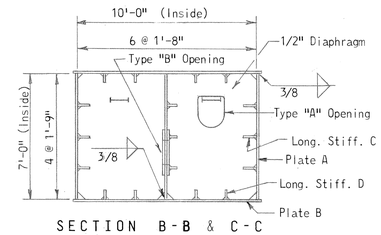

SECTION B-B & C-C
Scale: 1/4" = 1'-0"

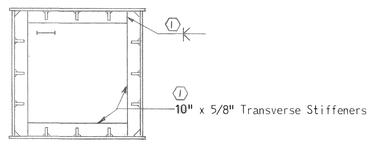

SECTION B'-B'
Scale: 1/4" = 1'-0"

STEEL BENT 22

MATERIAL TABLE		
Member	Section B-B & B'-B'	Section C-C & C'-C'
Plate A	1/2"	7/8"
Plate B	1/2"	1/2"
Long. Stiff. C	6" x 1/2"	9" x 3/4"
Long. Stiff. D	6" x 1/2"	6" x 1/2"
Transv.Stiff. E	1 10"x 5/8"	13" x 7/8" 1
Transv.Stiff. F	1 10"x 5/8"	10" x 5/8" 1

STEEL BENT 23

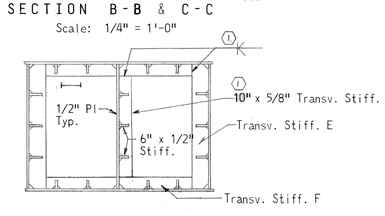

SECTION B'-B' & C'-C'
Scale: 1/4" = 1'-0"

NOTES:

1. For General Notes see Sheet 7.
2. For Shoe Details see Sheets 18 and 19.
3. For Details at Top see Sheets 31 and 32.
4. For Details at Bottom see Sheets 38 and 40
5. For Miscellaneous Details see Sheets 48 through 51.

BUILT DRAWING

1 AS BUILT DWG J.G.L. 1/76
REVISIONS

STATE OF MARYLAND
STATE ROADS COMMISSION
BALTIMORE, MD.
WM. PRESTON LANE, JR. MEMORIAL BRIDGE
SANDY POINT-KENT ISLAND

PLAN & ELEVATIONS STEEL BENTS 22 & 23

SCALE: 3/32"=1'-0" & As Shown DATE: JULY, 1969 CONTRACT: PB 12-1

J.E. GREINER COMPANY, INC.
CONSULTING ENGINEERS
BALTIMORE, MARYLAND

SHEET 22 OF 149

C-1100	MADE BY	CHECKED BY
DESIGN	P.G.T.	G.L.M.
DRAWING	T.G.	U.R.
TRACING	P.G.T.	P.G.W.
QUANTITIES	C.B.M. & J.W.H.	
IN CHARGE		

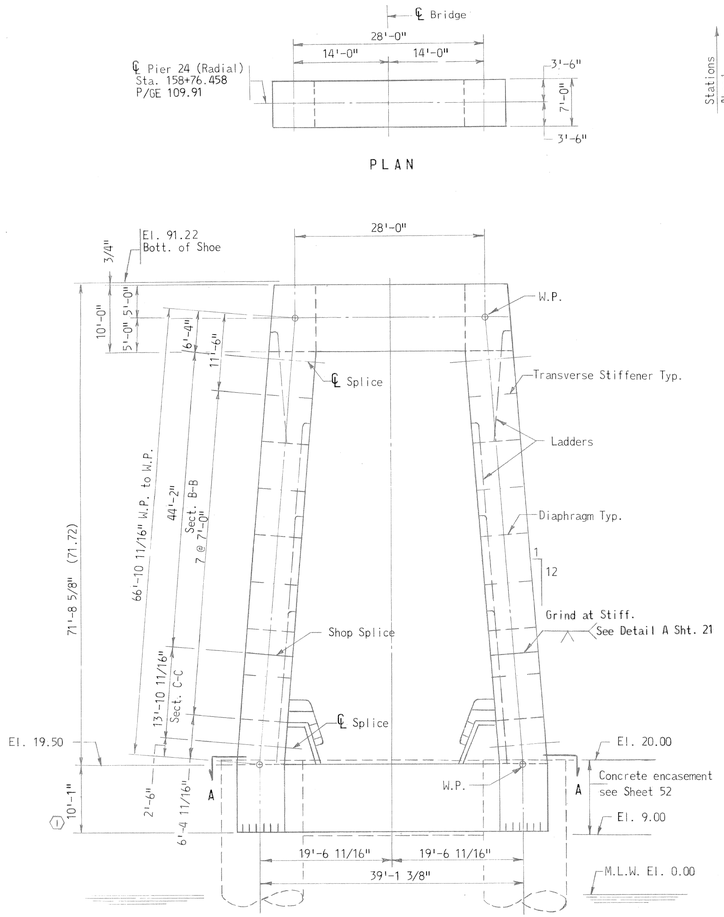

MATERIAL TABLE		
Member	Section B-B & B'-B'	Section C-C & C'-C'
Plate A	1/2"	3/4"
Plate B	1/2"	1/2"
Long. Stiff. C	6" x 1/2"	7" x 5/8"
Long. Stiff. D	6" x 1/2"	6" x 1/2"
Transv.Stiff. E	10" x 5/8" (1)	11" x 3/4" (1)
Transv.Stiff. F	10" x 5/8" (1)	10" x 5/8" (1)

STEEL BENT 24

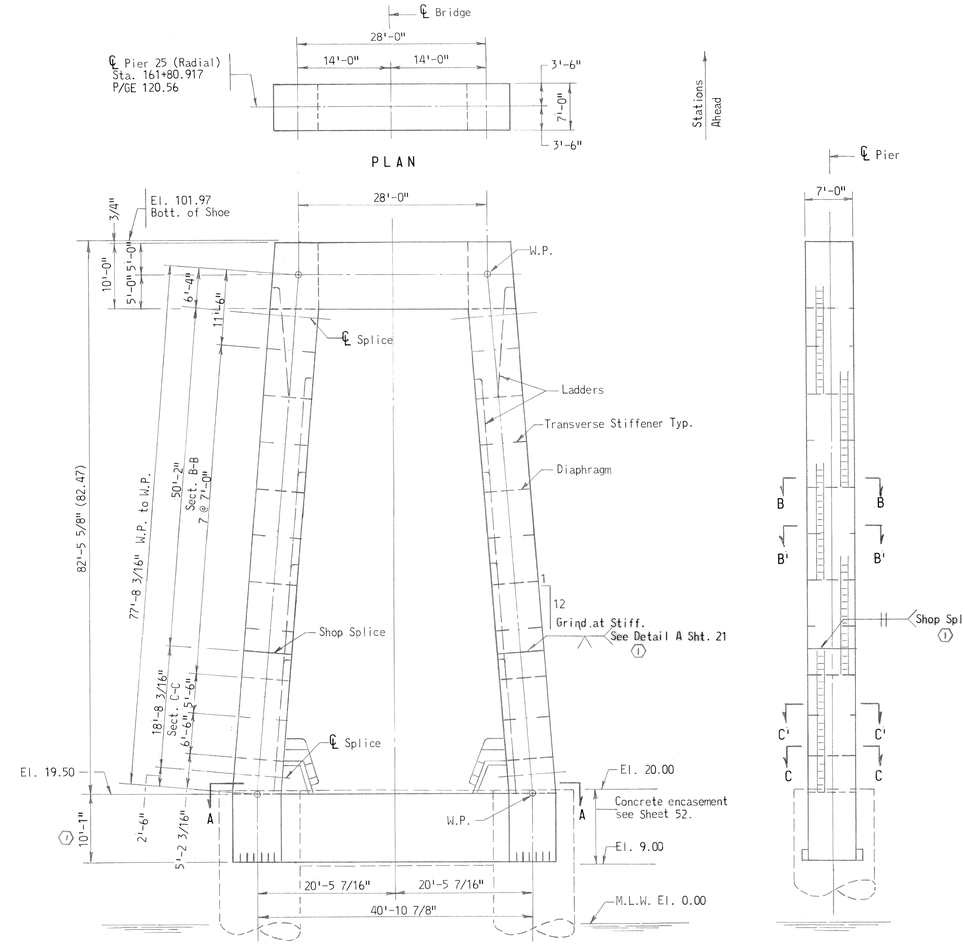

MATERIAL TABLE		
Member	Section B-B & B'-B'	Section C-C & C'-C'
Plate A	1/2"	3/4"
Plate B	1/2"	1/2"
Long. Stiff. C	6" x 1/2"	7" x 5/8"
Long. Stiff. D	6" x 1/2"	6" x 1/2"
Transv.Stiff. E	(1) 10" x 5/8"	11" x 3/4" (1)
Transv.Stiff. F	(1) 10" x 5/8"	10" x 5/8" (1)

STEEL BENT 25

NOTES:

1. For General Notes see Sheet 7.
2. For Shoe Details see Sheets 18 and 19.
3. For Details at Top see Sheet 31.
4. For Details at Bottom see Sheets 38 and 41.
5. For Miscellaneous Details see Sheets 48 through 51.

AS BUILT DRAWING

STATE OF MARYLAND
STATE ROADS COMMISSION
BALTIMORE, MD.
WM. PRESTON LANE, JR. MEMORIAL BRIDGE
SANDY POINT-KENT ISLAND

PLAN & ELEVATIONS
STEEL BENTS 24 & 25

SCALE: 3/32"=1'-0" & As Shown | DATE: JULY, 1969 | CONTRACT: PB 12-1

(1) AS BUILT DWG. J.G.L. 2/76

REVISIONS

J. E. GREINER COMPANY, INC.
CONSULTING ENGINEERS
BALTIMORE, MARYLAND

SHEET 23 OF 149

CHECKED BY	P.G.T.
MADE BY	J.R.
DESIGN	J.G.L.
DRAWING	J.R.
TRACING	P.G.T.
QUANTITIES	R.G.W.
IN CHARGE	C.B.M. & J.W.H.

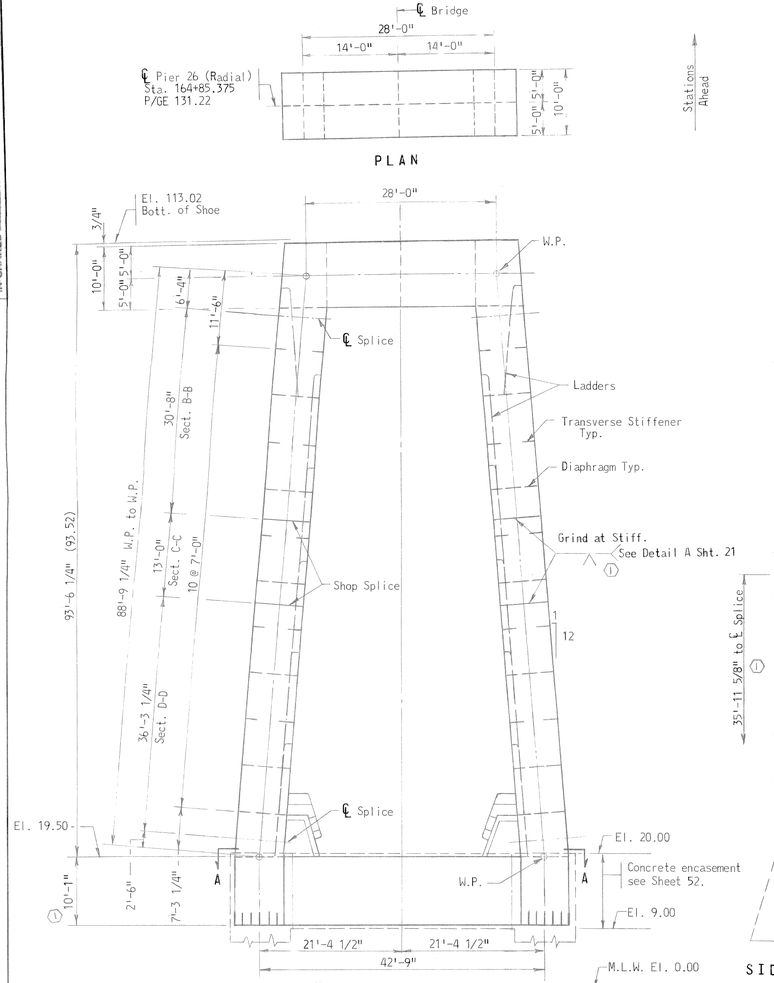

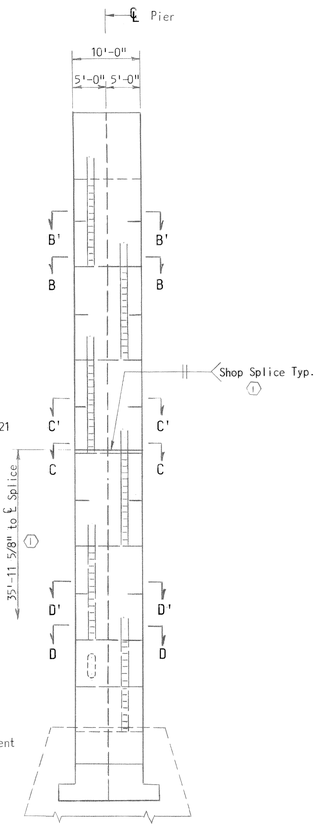

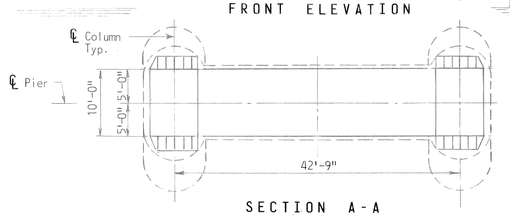

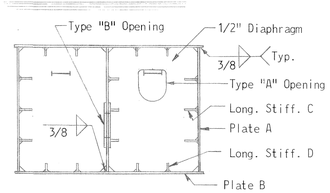

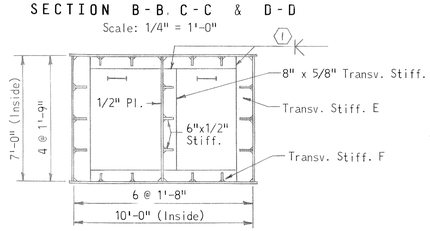

MATERIAL TABLE			
Member	Section B-B & B'-B'	Section C-C & C'-C'	Section D-D & D'-D'
Plate A	1/2"	1"	1 1/2"
Plate B	1/2"	1/2"	1/2"
Long. Stiff. C	6" x 1/2"	9" x 3/4"	13" x 1"
Long. Stiff. D	6" x 1/2"	6" x 1/2"	6" x 1/2"
Transv. Stiff. E	(1) 10" x 5/8"	(1) 13" x 7/8"	17" x 1 1/8" (1)
Transv. Stiff. F	(1) 10" x 5/8"	(1) 10" x 5/8"	8" x 5/8"

STEEL BENT 26

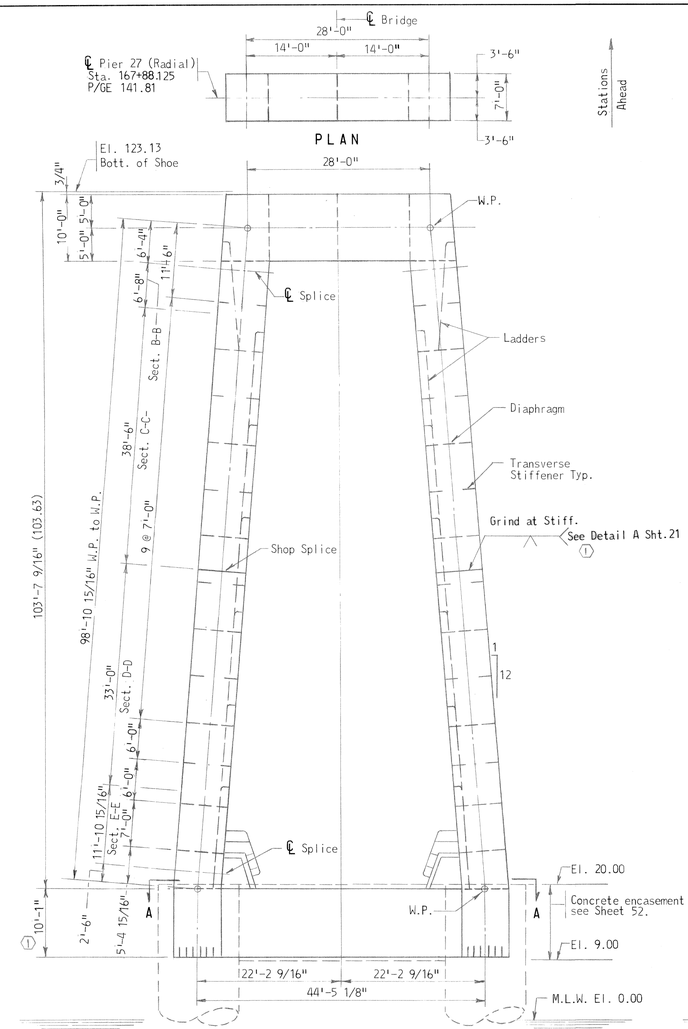

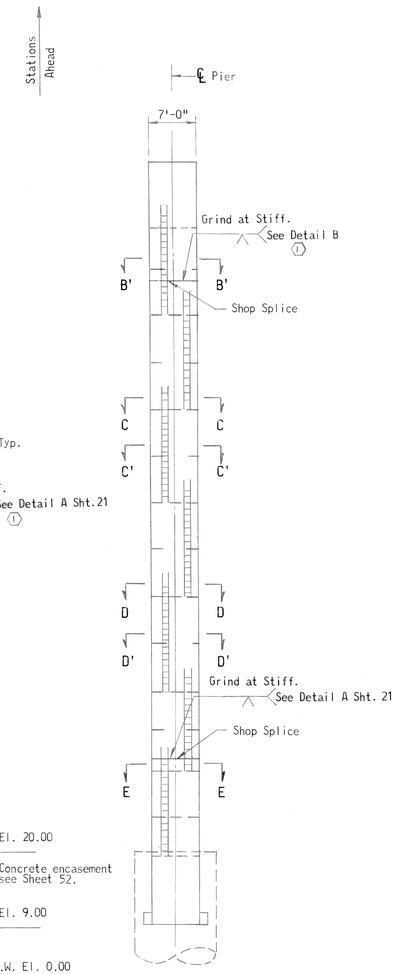

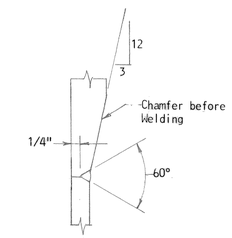

DETAIL B
Scale: None

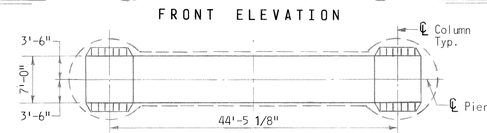

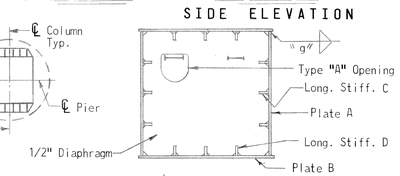

MATERIAL TABLE				
Member	Section B'-B'	Section C-C & C'-C'	Section D-D & D'-D'	Section E-E
Plate A	1/2"	1/2"	1"	1"
Plate B	5/8"	1/2"	1/2"	3/4"
Long. Stiff. C	6" x 1/2"	6" x 1/2"	9" x 3/4"	9" x 3/4"
Long. Stiff. D	7" x 5/8"	6" x 1/2"	6" x 1/2"	7" x 5/8"
Transv. Stiff. E	(1) 10" x 5/8"	(1) 10" x 5/8"	(1) 13" x 7/8"	(1)
Transv. Stiff. F	(1) 11" x 3/4"	(1) 10" x 5/8"	(1) 10" x 5/8"	(1)
Weld "g"	3/8"	3/8"	3/8"	9/16"

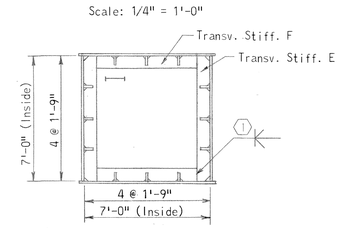

STEEL BENT 27

NOTES:

1. For General Notes see Sheet 7.
2. For Shoe Details see Sheet 18.
3. For Details at Top see Sheets 31 and 32.
4. For Details at Bottom see Sheets 41 and 42.
5. For Miscellaneous Details see Sheets 48 Through 51.

AS BUILT DRAWING

STATE OF MARYLAND
STATE ROADS COMMISSION
BALTIMORE, MD.
WM. PRESTON LANE, JR. MEMORIAL BRIDGE
SANDY POINT-KENT ISLAND

PLAN & ELEVATIONS
STEEL BENTS 26 & 27

SCALE: 3/32" = 1'-0" & As Shown DATE: JULY, 1969 CONTRACT: PB 12-1

(1) AS BUILT DWG. J.G.L. 2/76
REVISIONS

J. E. GREINER COMPANY, INC.
CONSULTING ENGINEERS
BALTIMORE, MARYLAND

SHEET 24 OF 149

DESIGN APS + GCB
DRAWING BH GCB
TRACING BH GCB
QUANTITIES BH
IN CHARGE EHG

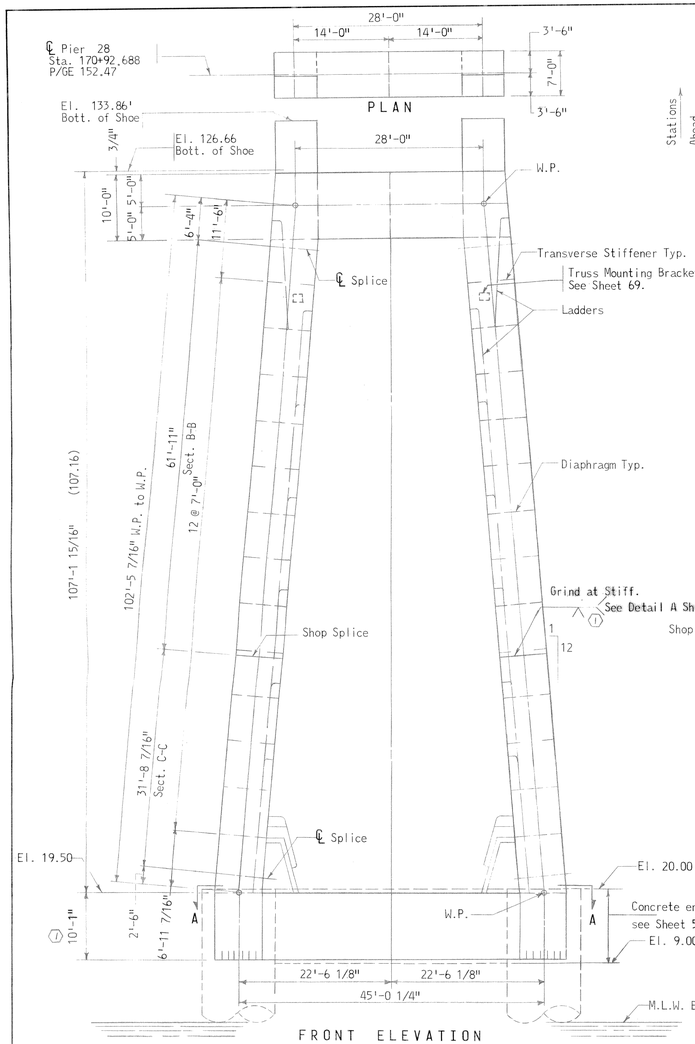

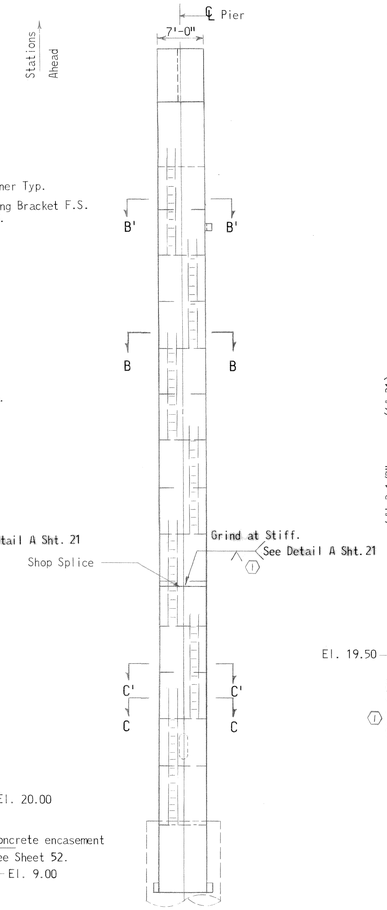

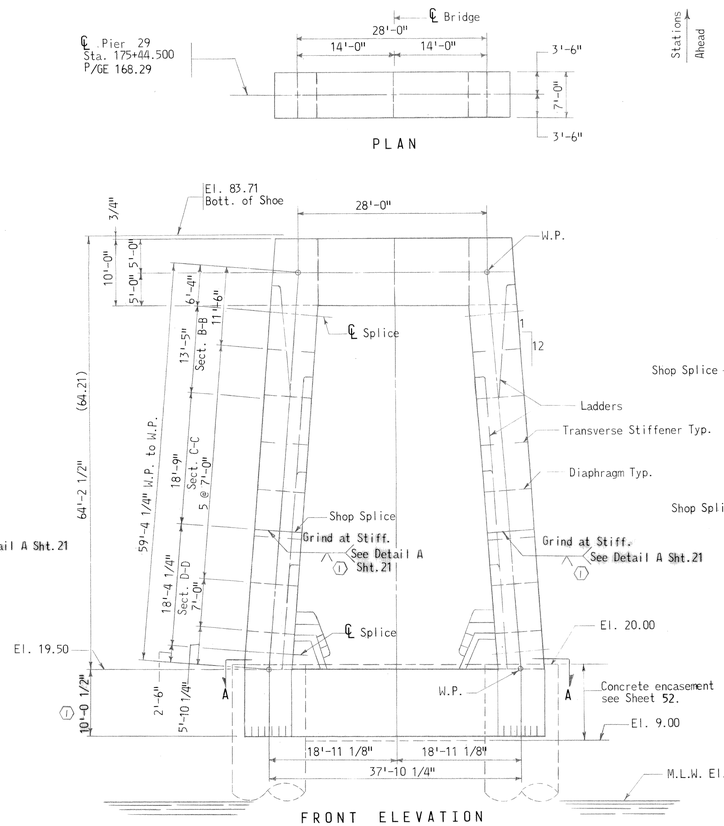

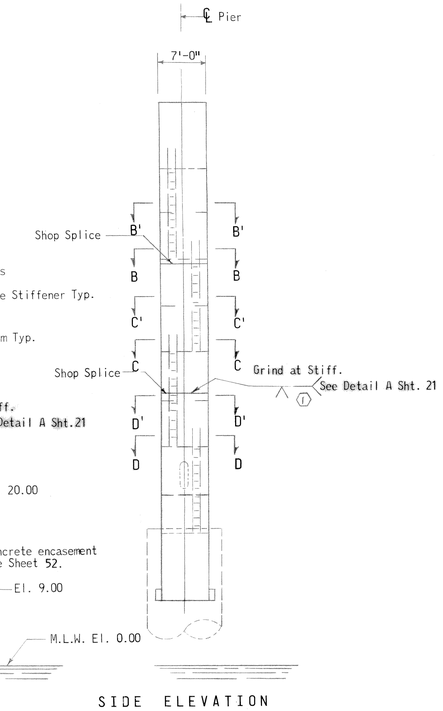

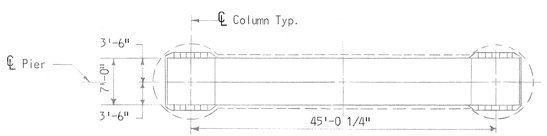

MATERIAL TABLE		
Member	Section B-B & B'-B'	Section C-C & C'-C'
Plate A	1/2"	3/4"
Plate B	1/2"	3/4"
Long. Stiff. C	6"x1/2"	7"x5/8"
Long. Stiff. D	6"x1/2"	7"x5/8"
Transv.Stiff.E	10"x5/8" (1)	11"x3/4" (1)
Transv.Stiff.F	10"x5/8" (1)	11"x3/4" (1)
Weld "g"	3/8"	9/16"

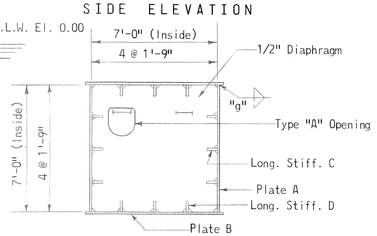

SECTION B-B & C-C
Scale: 1/4" = 1'-0"

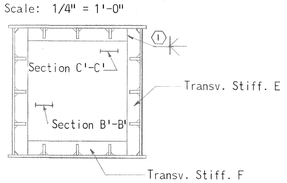

SECTION B'-B' & C'-C'
Scale: 1/4" = 1'-0"

STEEL BENT 28

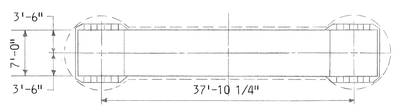

SECTION A-A

MATERIAL TABLE			
Member	Section B-B & B'-B'	Section C-C & C'-C'	Section D-D & D'-D'
Plate A	3/4"	3/4"	1"
Plate B	3/4"	7/8"	1 1/8"
Long. Stiff. C	7"x5/8"	7"x5/8"	9"x3/4"
Long. Stiff. D	7"x5/8"	9"x3/4"	10"x3/4"
Transv.Stiff.E	11"x3/4"	(1) 11"x3/4"	13"x7/8" (1)
Transv.Stiff.F	11"x3/4"	(1) 13"x7/8"	13 1/2"x1" (1)
Weld "g"	9/16"	9/16"	3/4"

STEEL BENT 29

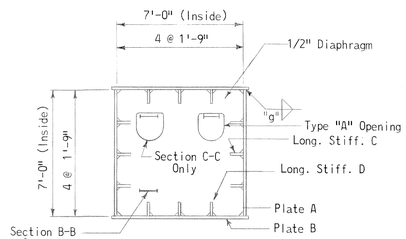

SECTION B-B, C-C & D-D
Scale: 1/4" = 1'-0"

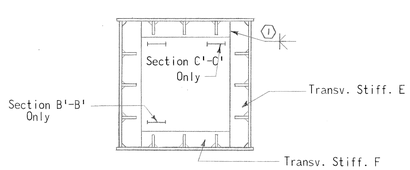

SECTION B'-B', C'-C' & D'-D'
Scale: 1/4" = 1'-0"

AS BUILT DRAWING

NOTES:

1. For General Notes See Sheet 7.
2. For Shoe Details See Sheets 19,69 and 80.
3. For Details of Top See Sheets 33 and 34.
4. For Details of Bottom See Sheets 43 and 44.
5. For Miscellaneous Details See Sheets 48 through 51.

Steel Bent 28 to be constructed under Contract PB 12-1
Steel Bent 29 to be constructed under Contract PB 13-1

STATE OF MARYLAND
STATE ROADS COMMISSION
BALTIMORE, MD.
WM. PRESTON LANE, JR. MEMORIAL BRIDGE
SANDY POINT-KENT ISLAND
PLAN & ELEVATIONS
STEEL BENTS 28 & 29

SCALE: 3/32"=1'-0" & As Shown DATE: JULY, 1969 CONTRACT: PB 12-1 & PB 13-1

(1) AS BUILT DWG. J.G.L. 11-11-74
REVISIONS

J. E. GREINER COMPANY, INC.
CONSULTING ENGINEERS
BALTIMORE, MARYLAND

SHEET 25 OF 149

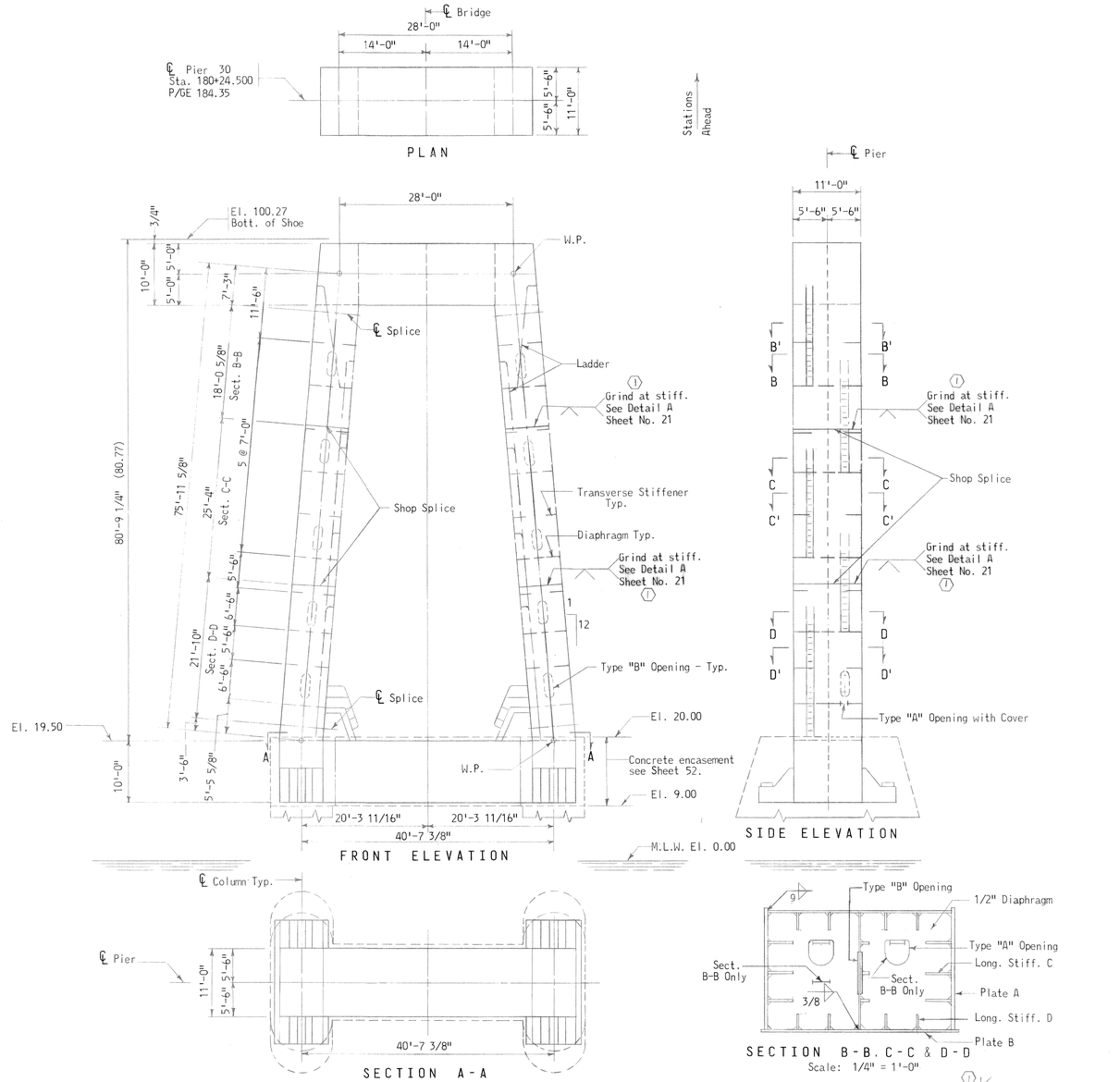

MATERIAL TABLE			
Member	Section B-B & B'-B'	Section C-C & C'-C'	Section D-D & D'-D'
Plate A	1 1/4"	2"	2 1/2"
Plate B	5/8"	1"	1 1/2"
Long. Stiff. C	11"x7/8"	15"x1 1/4"	18"x1 3/8"
Long. Stiff. D	6"x5/8"	9"x3/4"	13"x1"
Transv.Stiff.E	(1) 15"x1"	(1) 19"x1 1/4"	(1) 22"x1 1/2"
Transv.Stiff.F	(1) 10"x5/8"	(1) 13"x7/8"	(1) 17"x1 1/8"
Weld "g"	3/8"	3/4"	1 1/8"

NOTES:

1. For General Notes See Sheet 7.
2. For Shoe Details See Sheet 80.
3. For Details of Top See Sheet 35.
4. For Details of Bottom See Sheet 45.
5. For Miscellaneous Details See Sheets 48 through 51.

STATE OF MARYLAND
STATE ROADS COMMISSION
BALTIMORE, MD.
WM. PRESTON LANE, JR. MEMORIAL BRIDGE
SANDY POINT-KENT ISLAND

PLAN & ELEVATIONS
STEEL BENT 30

SCALE: 3/32"=1'-0" & As Shown DATE: JULY, 1969 CONTRACT: PB 13-1

(1) AS BUILT DWG. J.G.L. 10-25-74
REVISIONS

J.E. GREINER COMPANY, INC.
CONSULTING ENGINEERS
BALTIMORE, MARYLAND

SHEET 26 OF 149

C-1100 MADE BY EFC CHECKED BY GCB
DESIGN BH EFC
DRAWING BH EFC
TRACING EFC BH
QUANTITIES C.B.M. & J.W.H.
IN CHARGE

	MADE BY	CHECKED BY
DESIGN	F.F.G.	G.K.B.
DRAWING	S.H.	G.K.B.
TRACING	S.H.	E.H.
QUANTITIES	E.H.C.	E.H.
IN CHARGE	C.E.V., Jr.	J.W.H.

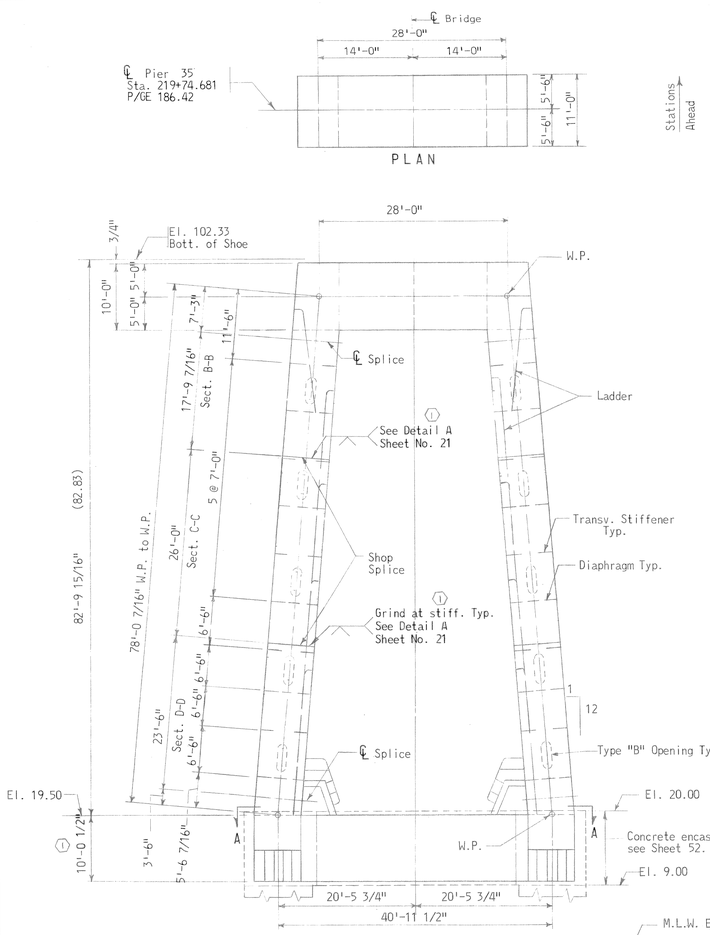

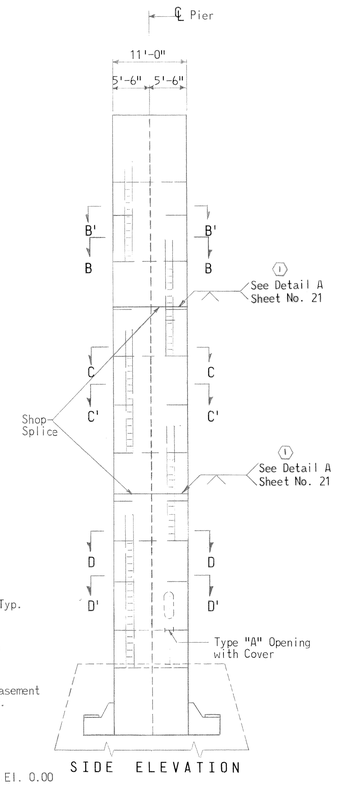

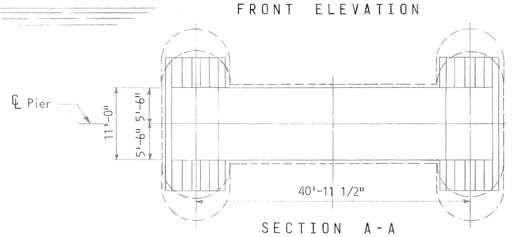

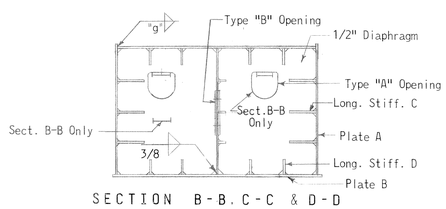

SECTION B-B, C-C & D-D
Scale: 1/4" = 1'-0"

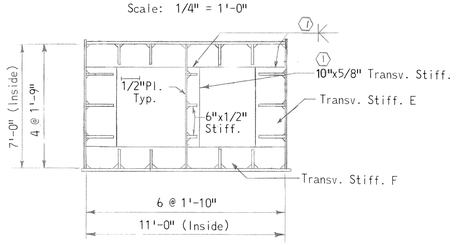

SECTION B'-B', C'-C' & D'-D'
Scale: 1/4" = 1'-0"

STEEL BENT 35

MATERIAL TABLE			
Member	Section B-B & B'-B'	Section C-C & C'-C'	Section D-D & D'-D'
Plate A	1 1/4"	2"	2 1/2"
Plate B	5/8"	1"	1 1/2"
Long. Stiff. C	11"x7/8"	15"x1 1/4"	18"x1 3/8"
Long. Stiff. D	6"x5/8"	9"x3/4"	13"x1"
Transv.Stiff.E	(1) 15"x1"	(1) 19"x1 1/4"	(1) 22"x1 1/2"
Transv.Stiff.F	(1) 10"x5/8"	(1) 13"x7/8"	(1) 17"x1 1/8"
Weld "g"	3/8"	3/4"	1 1/8"

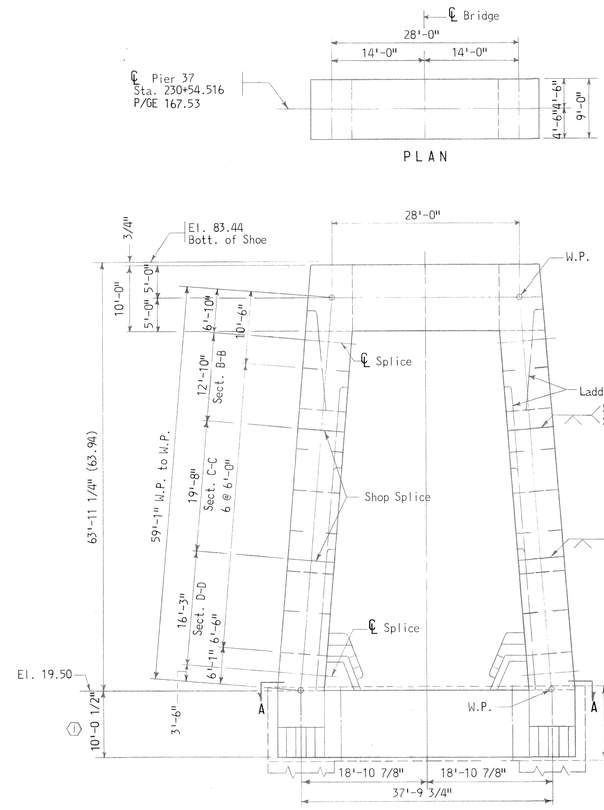

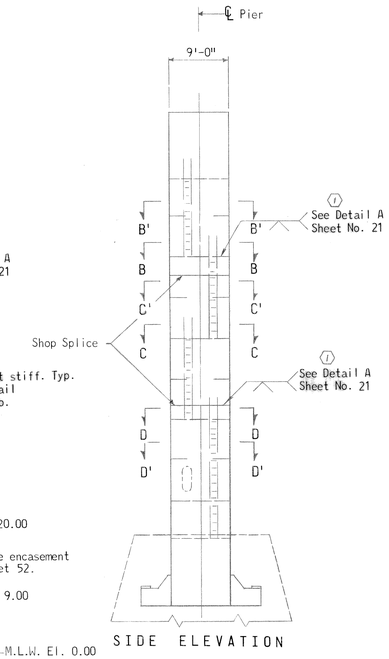

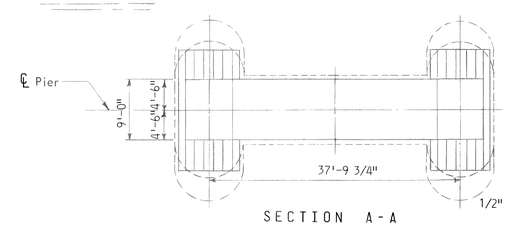

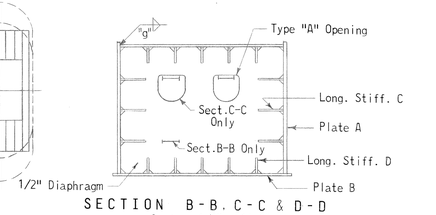

SECTION B-B, C-C & D-D
Scale: 1/4" = 1'-0"

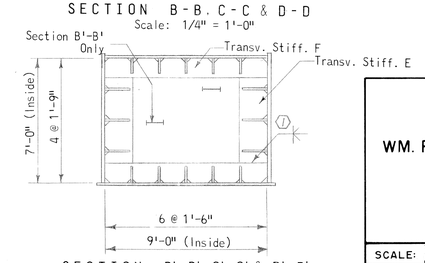

SECTION B'-B', C'-C' & D'-D'
Scale: 1/4" = 1'-0"

STEEL BENT 37

MATERIAL TABLE			
Member	Section B-B & B'-B'	Section C-C & C'-C'	Section D-D & D'-D'
Plate A	1 1/4"	1 3/4"	2"
Plate B	1/2"	3/4"	1 3/8"
Long. Stiff. C	11"x7/8"	14"x1 1/8"	15"x1 1/4"
Long. Stiff. D	6"x1/2"	7"x5/8"	11"x7/8"
Transv.Stiff.E	(1) 15"x1"	(1) 18"x1 1/4"	(1) 19"x1 1/4"
Transv.Stiff.F	(1) 11"x7/8"	(1) 13"x1"	(1) 15"x1 1/4"
Weld "g"	3/8"	9/16"	1"

NOTES:

1. For General Notes See Sheet 7.
2. For Shoe Details See Sheet 80.
3. For Details at Top See Sheets 35 and 36.
4. For Details at Bottom See Sheets 45 and 46.
5. For Miscellaneous Details See Sheets 48 through 51.

AS BUILT DRAWING

STATE OF MARYLAND
STATE ROADS COMMISSION
BALTIMORE, MD.
WM. PRESTON LANE, JR. MEMORIAL BRIDGE
SANDY POINT-KENT ISLAND

PLAN & ELEVATIONS
STEEL BENTS 35 & 37

SCALE: 3/32"=1'-0" & As Shown DATE: JULY, 1969 CONTRACT: PB 13-1

(1) AS BUILT DWG. J.G.L. 10-25-74
REVISIONS

J.E.GREINER COMPANY, INC.
CONSULTING ENGINEERS
BALTIMORE, MARYLAND

SHEET 27 OF 149

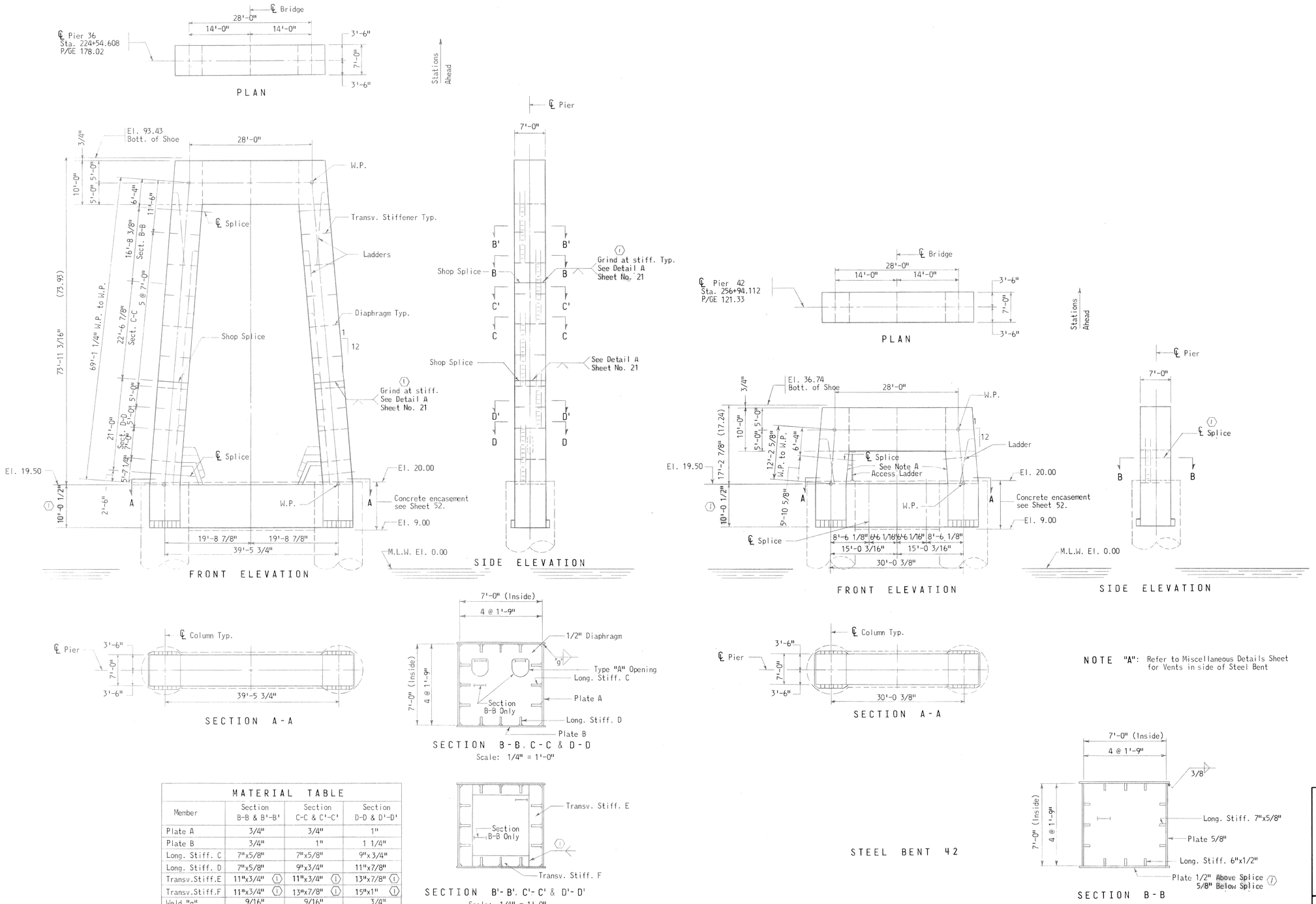

NOTE "A": Refer to Miscellaneous Details Sheet for Vents in side of Steel Bent

NOTES:

1. For General Notes See Sheet 7.
2. For Shoe Details See Sheet 80.
3. For Details at Top See Sheet 34.
4. For Details at Bottom See Sheets 43 and 44.
5. For Miscellaneous Details See Sheets 48 through 51.

AS BUILT DRAWING

MATERIAL TABLE

Member	Section B-B & B'-B'	Section C-C & C'-C'	Section D-D & D'-D'
Plate A	3/4"	3/4"	1"
Plate B	3/4"	1"	1 1/4"
Long. Stiff. C	7"x5/8"	7"x5/8"	9"x3/4"
Long. Stiff. D	7"x5/8"	9"x3/4"	11"x7/8"
Transv.Stiff.E	11"x3/4" (1)	11"x3/4" (1)	13"x7/8" (1)
Transv.Stiff.F	11"x3/4" (1)	13"x7/8" (1)	15"x1" (1)
Weld "g"	9/16"	9/16"	3/4"

STEEL BENT 36

STATE OF MARYLAND
STATE ROADS COMMISSION
BALTIMORE, MD.
WM. PRESTON LANE, JR. MEMORIAL BRIDGE
SANDY POINT-KENT ISLAND
PLAN & ELEVATIONS
STEEL BENTS 36 & 42

SCALE: 3/32"=1'-0" & As Shown DATE: JULY, 1969 CONTRACT: PB 13-1

(1) AS BUILT DWG. J.G.L. 10-25-74

REVISIONS

J. E. GREINER COMPANY, INC.
CONSULTING ENGINEERS
BALTIMORE, MARYLAND

SHEET 28 OF 149

C-110	MADE BY	CHECKED BY
DESIGN	CGS	FC+MJ
DRAWING	RJH	JCB
TRACING	BJT	CGB
QUANTITIES	E.F.G.	RJH
IN CHARGE	C.B., M., R., J. W.H.	

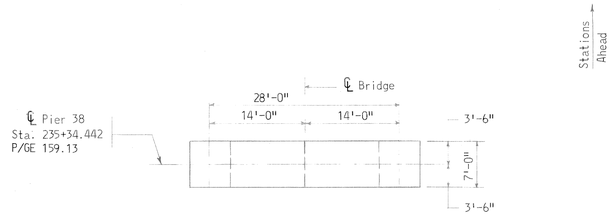

PLAN

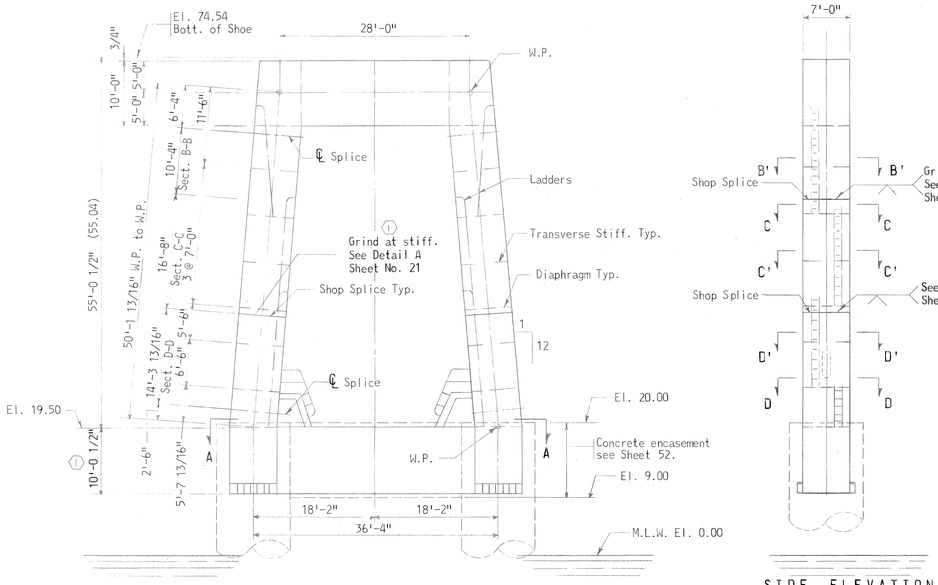

FRONT ELEVATION

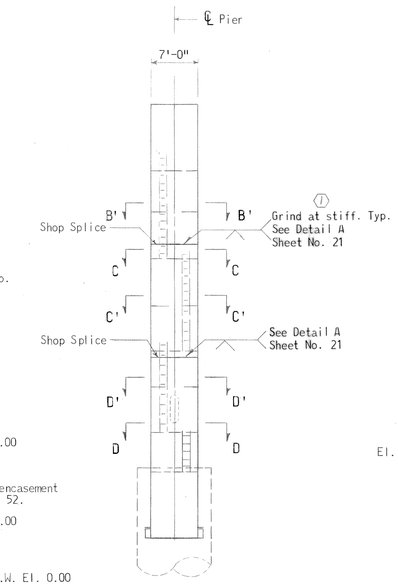

SIDE ELEVATION

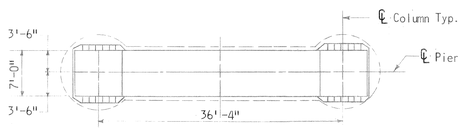

SECTION A-A

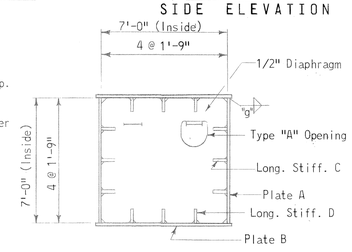

SECTION C-C & D-D

Scale: 1/4" = 1'-0"

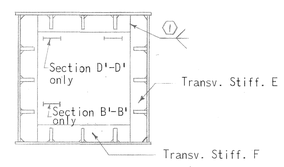

SECTION B'-B', C'-C' & D'-D'

Scale: 1/4" = 1'-0"

MATERIAL TABLE			
Member	Section B'-B'	Section C-C & C'-C'	Section D-D & D'-D'
Plate A	3/4"	3/4"	1"
Plate B	5/8"	3/4"	7/8"
Long. Stiff. C	7"x5/8"	7"x5/8"	9"x3/4"
Long. Stiff. D	7"x5/8"	7"x5/8"	9"x3/4"
Transv.Stiff. E	11"x3/4" (1)	11"x3/4" (1)	13"x7/8" (1)
Transv.Stiff. F	11"x3/4" (1)	11"x3/4" (1)	13"x7/8" (1)
Weld "g"	1/2	9/16	5/8

STEEL BENT 38

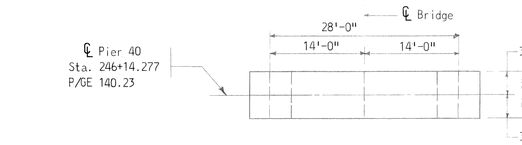

PLAN

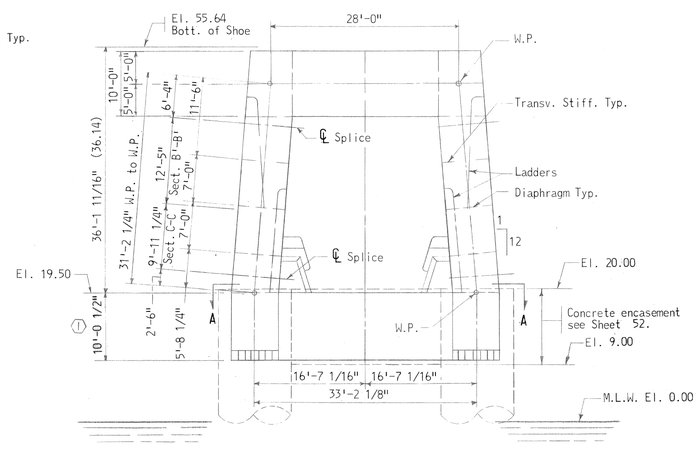

FRONT ELEVATION

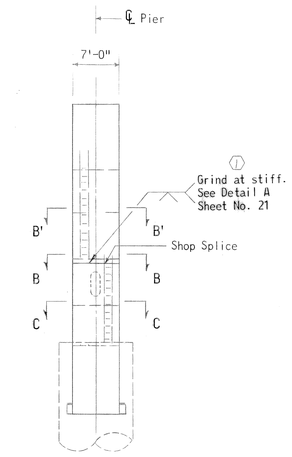

SIDE ELEVATION

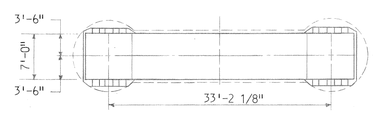

SECTION A-A

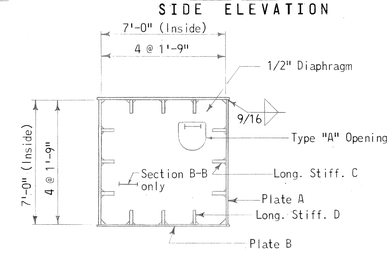

SECTION B-B & C-C

Scale: 1/4" = 1'-0"

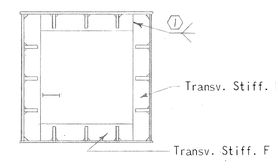

SECTION B'-B'

Scale: 1/4" = 1'-0"

MATERIAL TABLE		
Member	Section B-B & B'-B'	Section C-C
Plate A	3/4"	3/4"
Plate B	5/8"	3/4"
Long. Stiff. C	7"x5/8"	7"x5/8"
Long. Stiff. D	7"x5/8"	7"x5/8"
Transv.Stiff. E	11"x3/4" (1)	—
Transv.Stiff. F	11"x3/4" (1)	—

STEEL BENT 40

NOTES:

1. For General Notes see Sheet 7.
2. For Shoe Details see Sheet 80.
3. For Details of Top see Sheet 34.
4. For Details of Bottom see Sheets 43 and 44.
5. For Miscellaneous Details see Sheets 48 through 51.

AS BUILT DRAWING

STATE OF MARYLAND
STATE ROADS COMMISSION
BALTIMORE, MD.
WM. PRESTON LANE, JR. MEMORIAL BRIDGE
SANDY POINT–KENT ISLAND

PLAN & ELEVATIONS
STEEL BENTS 38 & 40

SCALE: 3/32"=1'-0" & As Shown DATE: JULY, 1969 CONTRACT: PB 13-1

(1) AS BUILT DWG. J.G.L. 10-25-74
REVISIONS

J.E. GREINER COMPANY, INC.
CONSULTING ENGINEERS
BALTIMORE, MARYLAND

SHEET 29 OF 149

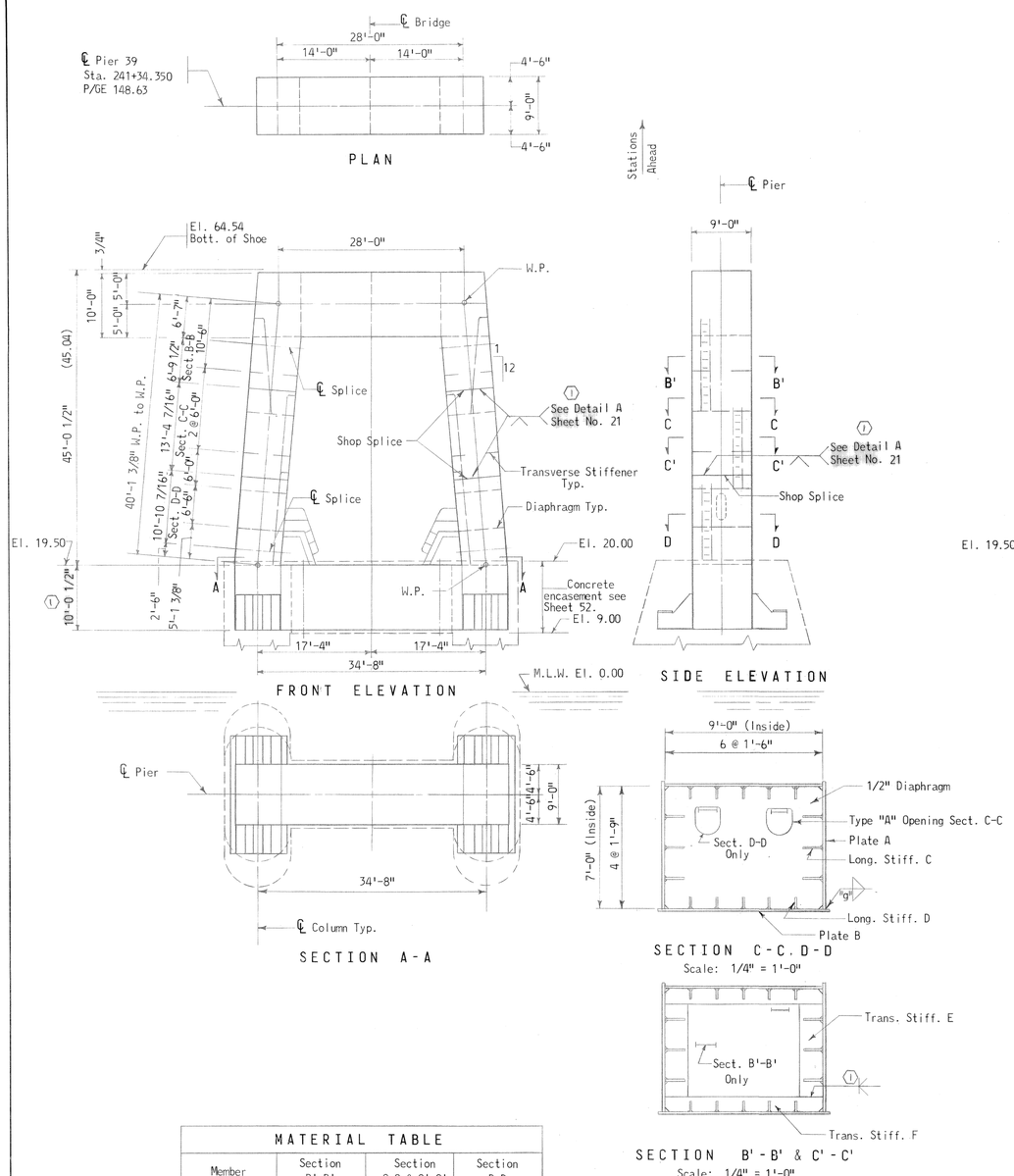

MATERIAL TABLE			
Member	Section B'-B'	Section C-C & C'-C'	Section D-D
Plate A	7/8"	1 3/8"	1 1/2"
Plate B	1/2"	1/2"	7/8"
Long. Stiff. C	9"x3/4"	12"x7/8"	13"x1"
Long. Stiff. D	6"x1/2"	6"x1/2"	8"x5/8"
Trans.Stiff. E	(1) 13"x7/8"	(1) 16"x1 1/8"	-
Trans.Stiff. F	(1) 11"x7/8"	(1) 11"x7/8"	-
Weld "g"	3/8"	3/8"	5/8"

STEEL BENT 39

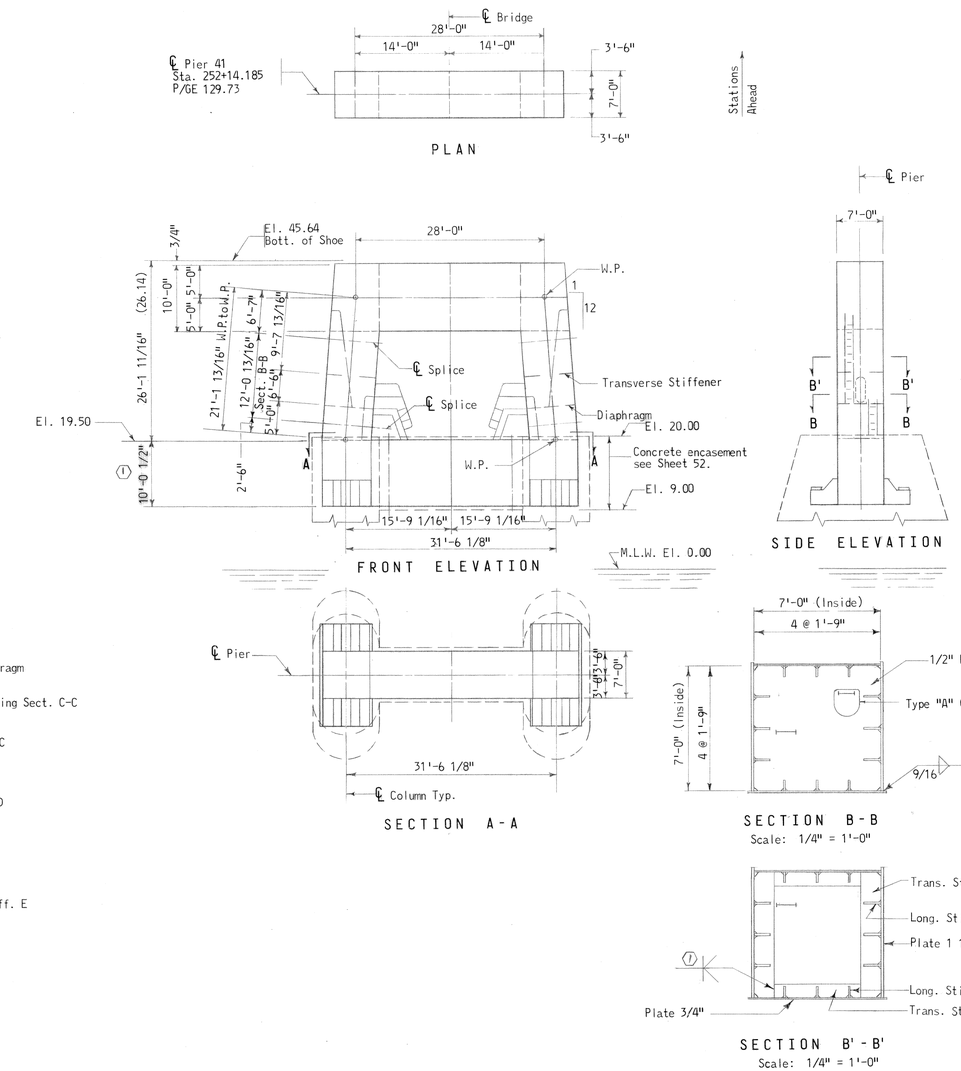

STEEL BENT 41

NOTES:

1. For General Notes See Sheet 7.
2. For Shoe Details See Sheet 80.
3. For Details at Top See Sheets 36 and 37.
4. For Details at Bottom See Sheets 46 and 47.
5. For Miscellaneous Details See Sheets 48 through 51.

AS BUILT DRAWING

STATE OF MARYLAND
STATE ROADS COMMISSION
BALTIMORE, MD.
WM. PRESTON LANE, JR. MEMORIAL BRIDGE
SANDY POINT-KENT ISLAND

PLAN & ELEVATIONS
STEEL BENTS 39 & 41

SCALE: 3/32"=1'-0" & As Shown DATE: JULY, 1969 CONTRACT: PB 13-1

(1) AS BUILT DWG. J.G.L. 10-25-74
REVISIONS

J. E. GREINER COMPANY, INC.
CONSULTING ENGINEERS
BALTIMORE, MARYLAND

SHEET 30 OF 149

C-1100
DESIGN
DRAWING
TRACING
QUANTITIES
IN CHARGE

MADE BY G.D.S.
U.G.
U.G.
R.G.T.
R.G.T.
C.G.V. Dr. J.W.H.

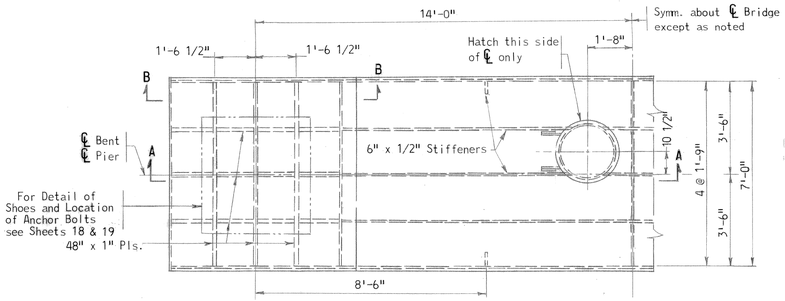

PLAN

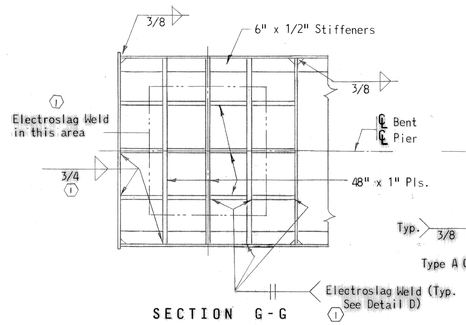

SECTION G-G

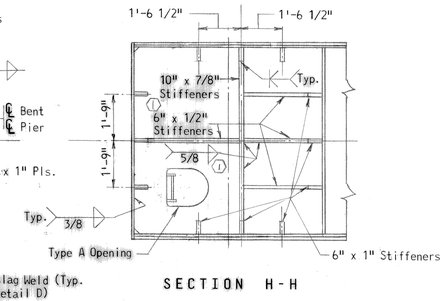

SECTION H-H

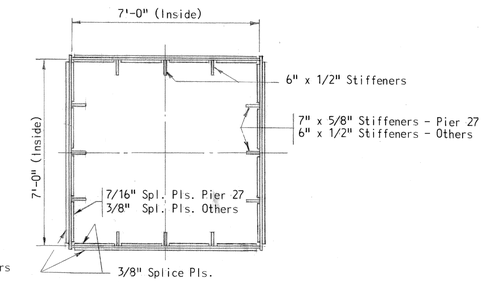

SECTION J-J

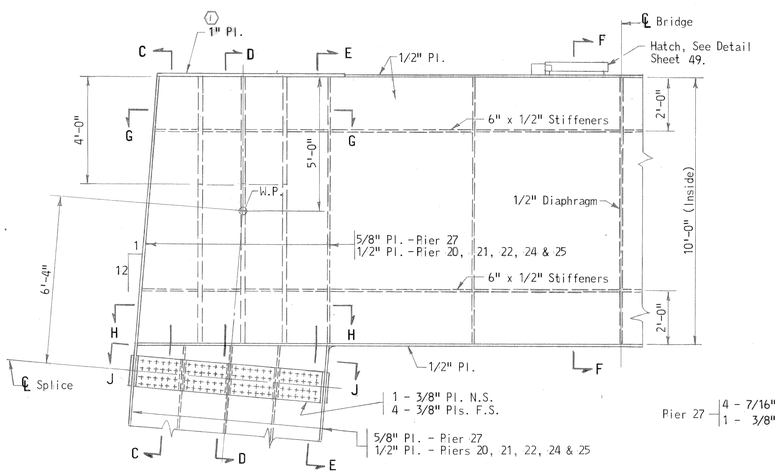

ELEVATION

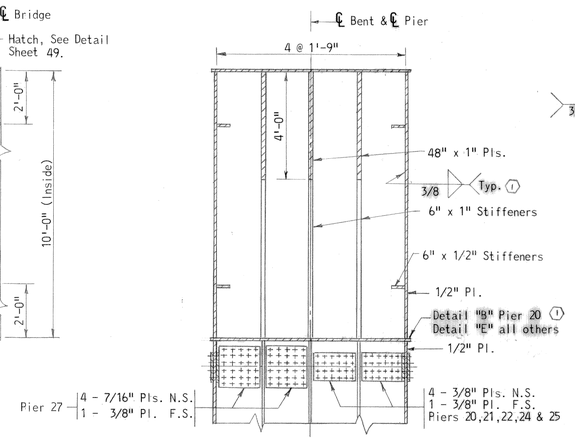

SECTION C-C

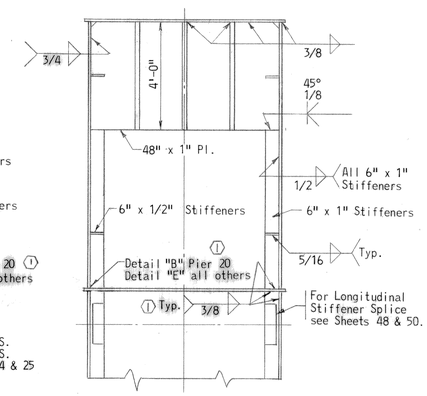

SECTION D-D

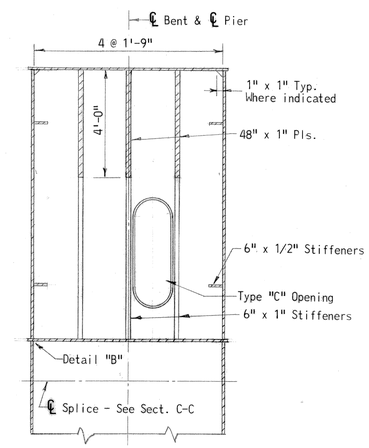

SECTION E-E

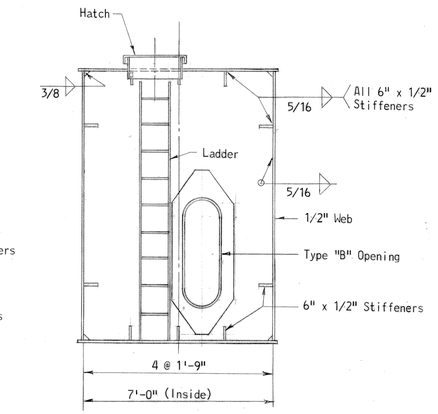

SECTION F-F

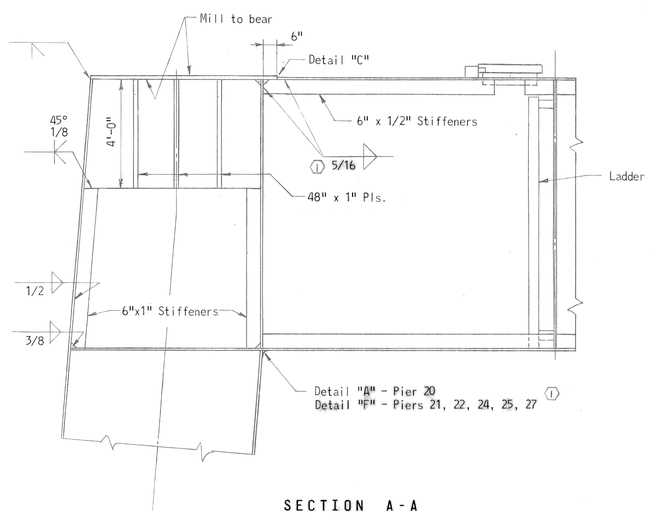

SECTION A-A

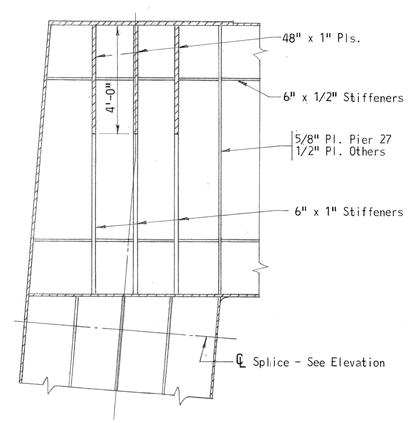

SECTION B-B

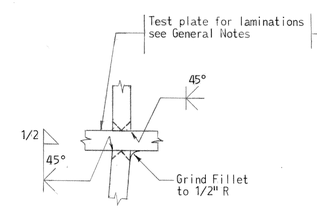

DETAIL "A"
(Pier 20) ①
No Scale

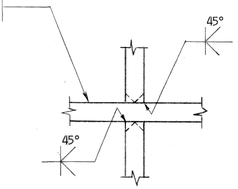

DETAIL "B"
(Pier 20) ①
No Scale

NOTES:

1. For General Notes see Sheet 7.
2. All bolts to be 7/8" ϕ H.S. Bolts unless otherwise noted.

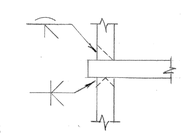

DETAIL "E"
No Scale ①

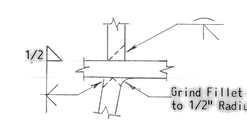

DETAIL "F"
No Scale ①

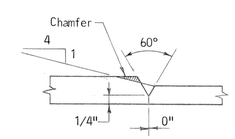

DETAIL "C"
No Scale

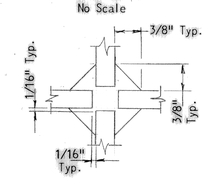

DETAIL "D"
No Scale ①

AS BUILT DRAWING

STATE OF MARYLAND
STATE ROADS COMMISSION
BALTIMORE, MD.
WM. PRESTON LANE, JR. MEMORIAL BRIDGE
SANDY POINT-KENT ISLAND

DETAILS AT TOP STEEL BENTS 20, 21, 22, 24, 25 & 27

SCALE: 3/8"=1'-0" & As Shown DATE: JULY, 1969 CONTRACT: PB 12-1

① AS BUILT DWG J.G.L. 2/76
REVISIONS

J. E. GREINER COMPANY, INC.
CONSULTING ENGINEERS
BALTIMORE, MARYLAND

SHEET 31 OF 149

C-1100
DESIGN
DRAWING
QUANTITIES
IN CHARGE
MADE BY C.R.
CHECKED BY G.D.S.

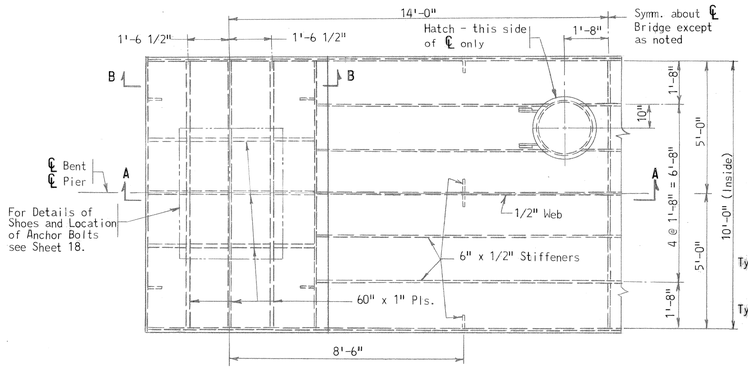

PLAN

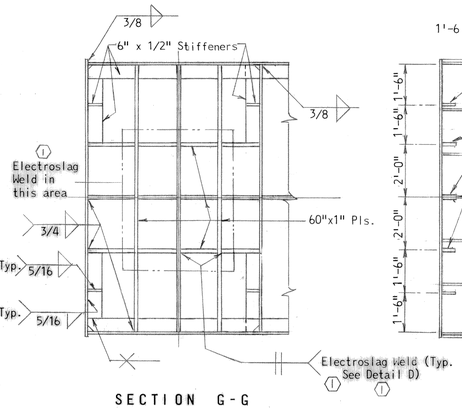

SECTION G-G

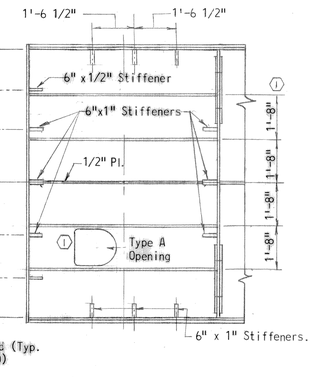

SECTION H-H

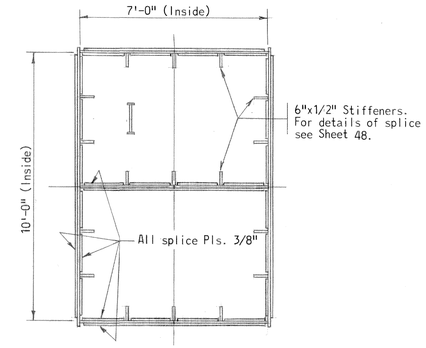

SECTION J-J

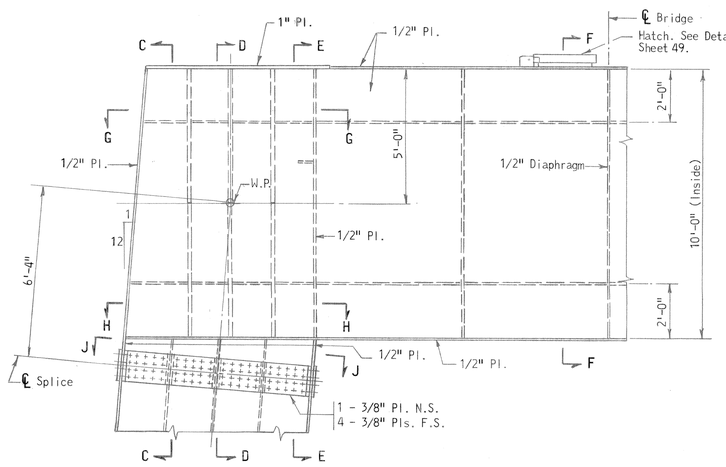

ELEVATION

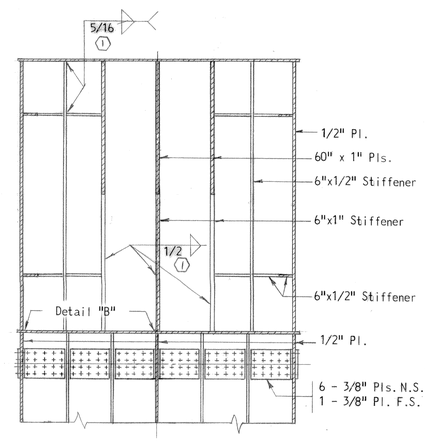

SECTION C-C

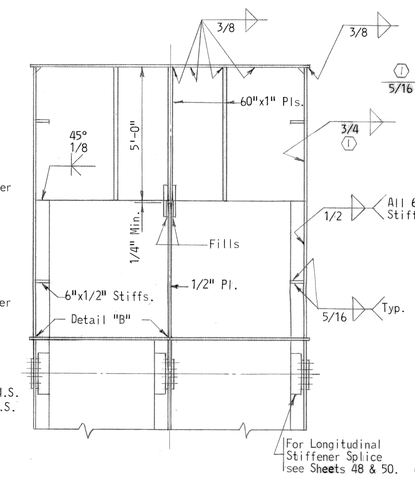

SECTION D-D

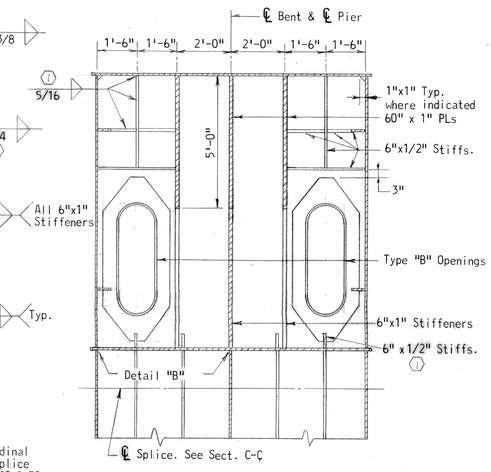

SECTION E-E

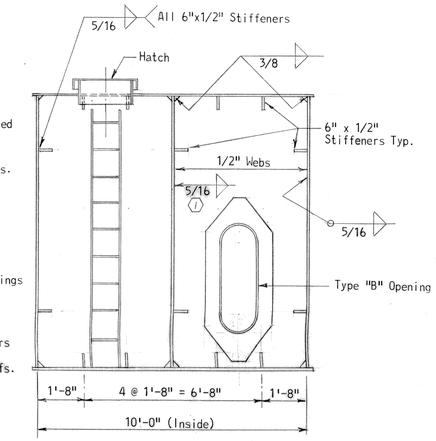

SECTION F-F

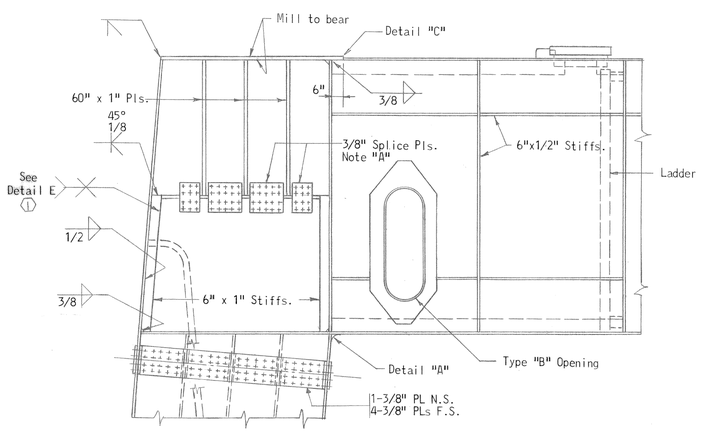

SECTION A-A

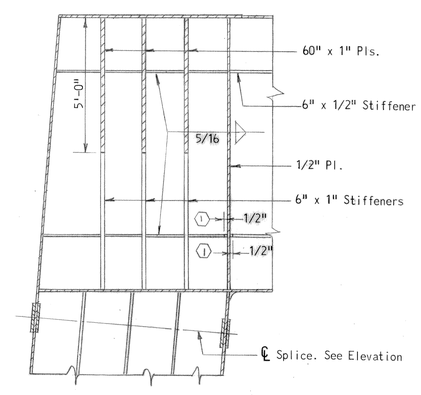

SECTION B-B

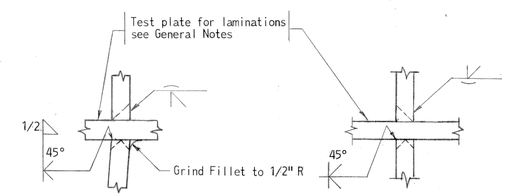

DETAIL "A"
No Scale

DETAIL "B"
No Scale

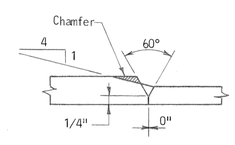

DETAIL "C"
No Scale

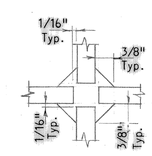

DETAIL "D"
No Scale

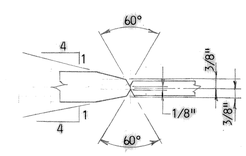

DETAIL "E"
No Scale

NOTES:

1. Note "A": Splice indicated by Note "A" to be made after all superstructure dead load is in place. Holes to be subpunched and reamed in field.
2. For General Notes see Sheet 7.
3. All bolts to be 7/8" ϕ H.S. Bolts unless otherwise noted.

AS BUILT DRAWING

STATE OF MARYLAND
STATE ROADS COMMISSION
BALTIMORE, MD.
WM. PRESTON LANE, JR. MEMORIAL BRIDGE
SANDY POINT–KENT ISLAND

DETAILS AT TOP STEEL BENTS 23 & 26

SCALE: 3/8" = 1'-0" & As Shown DATE: JULY, 1969 CONTRACT: PB 12-1

1 AS BUILT DWG. J.G.L. 2/76
REVISIONS

J. E. GREINER COMPANY, INC.
CONSULTING ENGINEERS
BALTIMORE, MARYLAND

SHEET 32 OF 149

	MADE BY	CHECKED BY
C- DESIGN	EFC	CCB
DRAWING	EFC	CCB
TRACING	EFC	CCB
QUANTITIES	EFC	BH
IN CHARGE	E.C.B.M.	P.L.W.H.

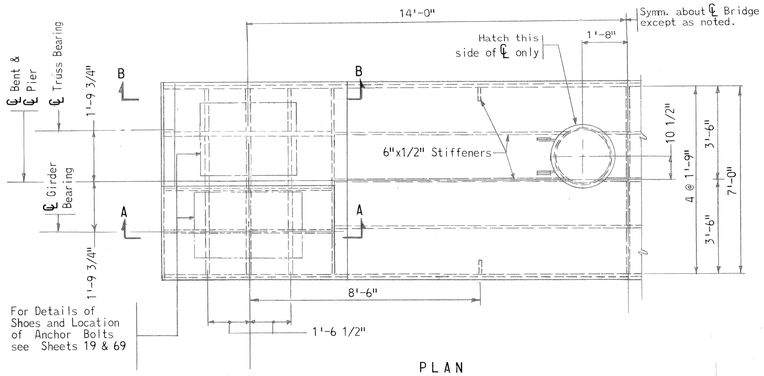

PLAN

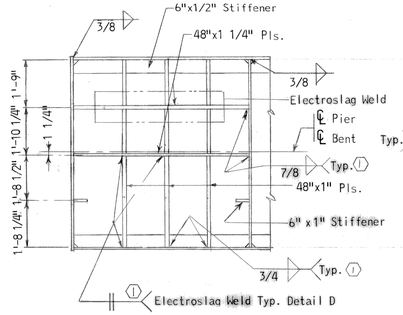

SECTION G-G

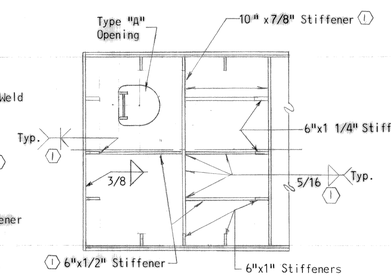

SECTION H-H

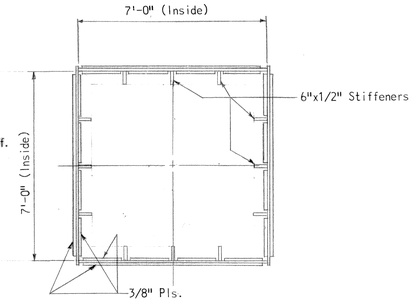

SECTION J-J

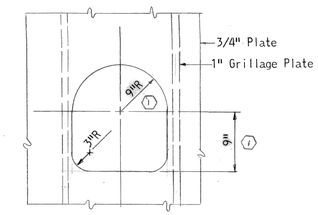

TYPE "AA" OPENING

Scale: 1" = 1'-0"

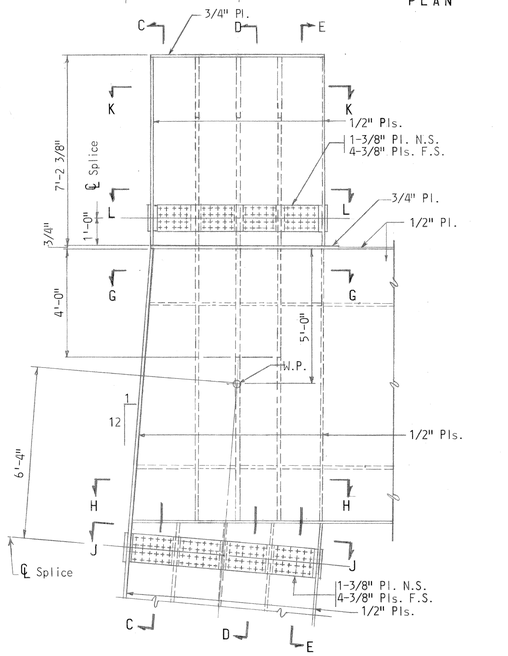

ELEVATION

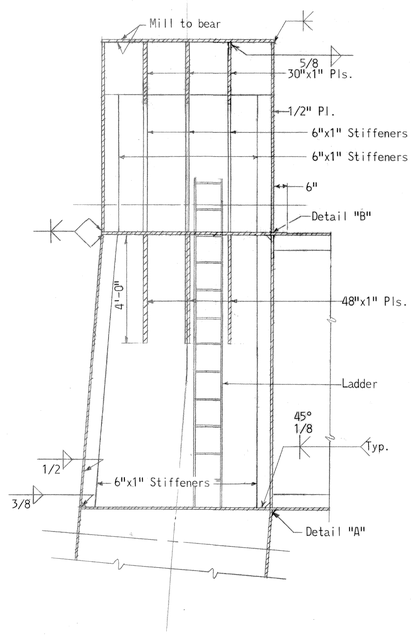

SECTION A-A

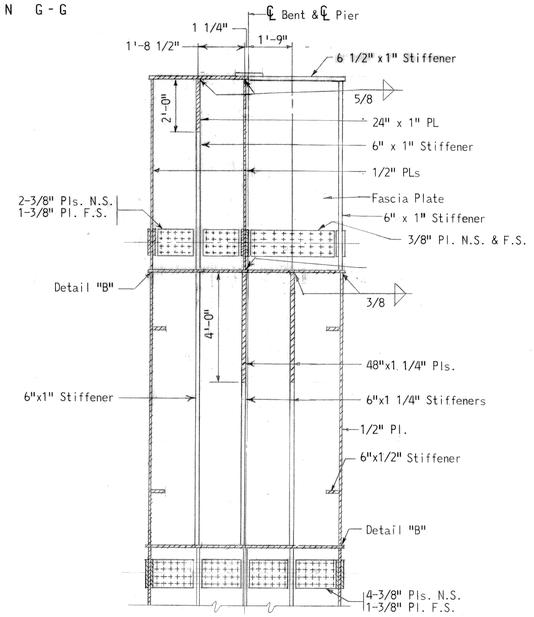

SECTION C-C

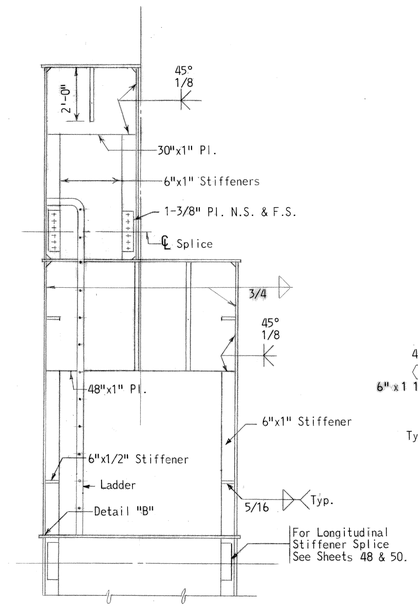

SECTION D-D

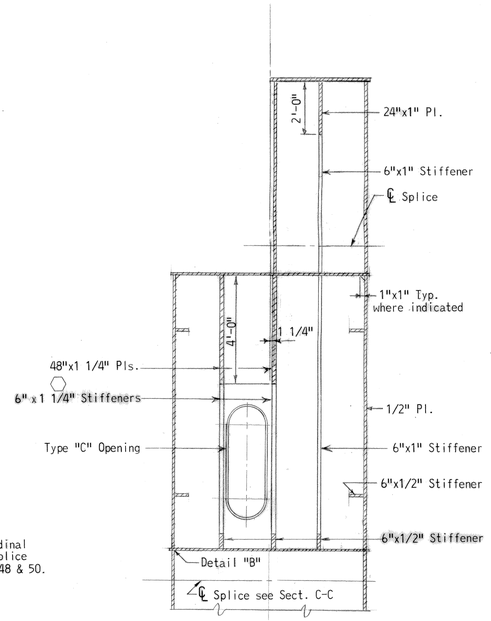

SECTION E-E

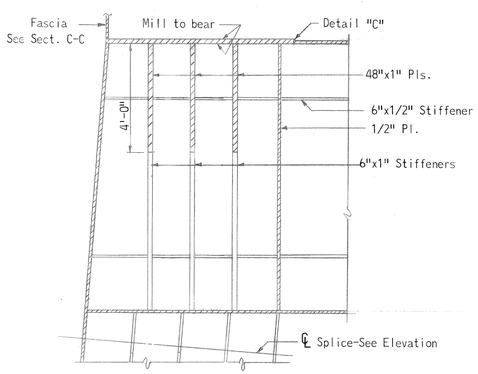

SECTION B-B

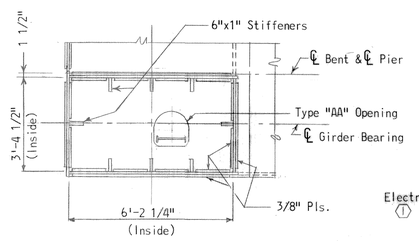

SECTION L-L

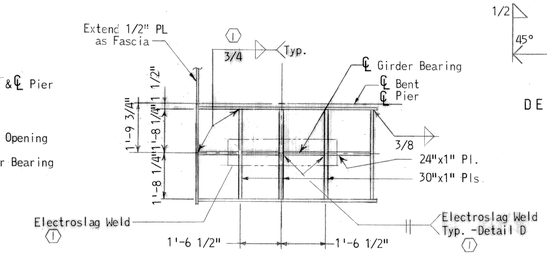

SECTION K-K

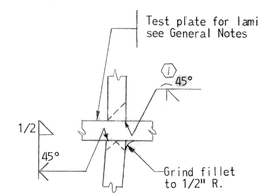

DETAIL "A"

No Scale

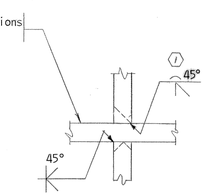

DETAIL "B"

No Scale

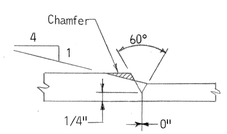

DETAIL "C"

No Scale

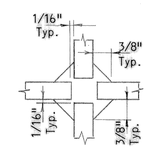

DETAIL "D"

No Scale

NOTES:

1. For General Notes see Sheet 7.
2. For Details not shown see Sheets 25 and 48 through 51.
3. All bolts to be 7/8" φ H.S. Bolts unless otherwise noted

AS BUILT DRAWING

STATE OF MARYLAND
STATE ROADS COMMISSION
BALTIMORE, MD.
WM. PRESTON LANE, JR. MEMORIAL BRIDGE
SANDY POINT-KENT ISLAND

DETAILS AT TOP STEEL BENT 28

SCALE: 3/8"=1'-0" & As Shown DATE: JULY, 1969 CONTRACT: PB 12-1

J.E. GREINER COMPANY, INC.
CONSULTING ENGINEERS
BALTIMORE, MARYLAND

SHEET 33 OF 149

REVISIONS: 1 AS BUILT DWG. J.G.L. 2/76

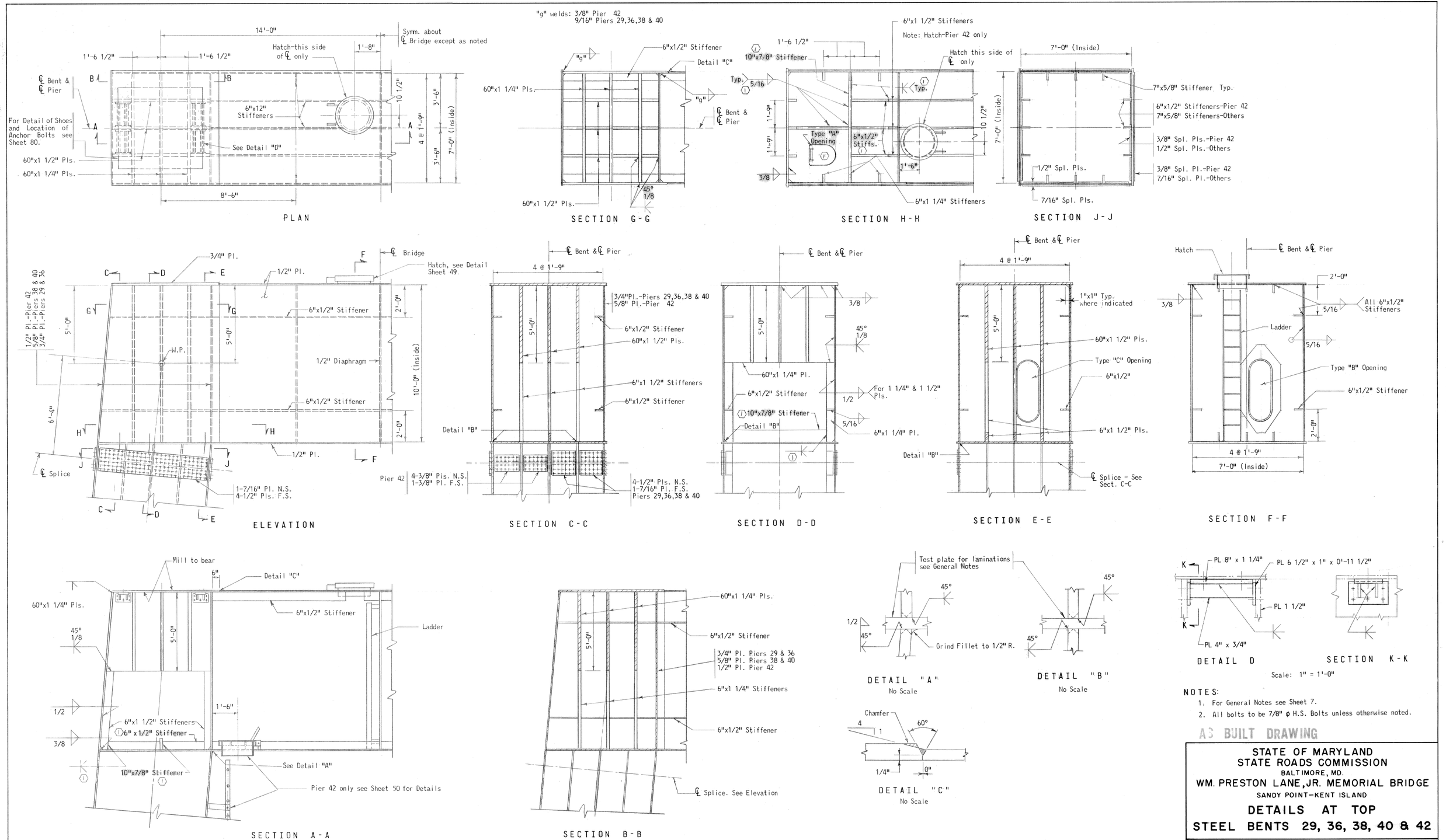

NOTES:

1. For General Notes see Sheet 7.
2. All bolts to be 7/8" ϕ H.S. Bolts unless otherwise noted.

AS BUILT DRAWING

STATE OF MARYLAND
STATE ROADS COMMISSION
BALTIMORE, MD.
WM. PRESTON LANE, JR. MEMORIAL BRIDGE
SANDY POINT-KENT ISLAND

DETAILS AT TOP
STEEL BENTS 29, 36, 38, 40 & 42

SCALE: 3/8"=1'-0" & As Shown DATE: JULY, 1969 CONTRACT: PB 13-1

(1) AS BUILT DWG. J.G.L. 3/76

REVISIONS

J.E. GREINER COMPANY, INC.
CONSULTING ENGINEERS
BALTIMORE, MARYLAND

SHEET 34 OF 149

MADE BY	CHECKED BY
C- DESIGN	
DRAWING	
TRACING	
QUANTITIES	
IN CHARGE	

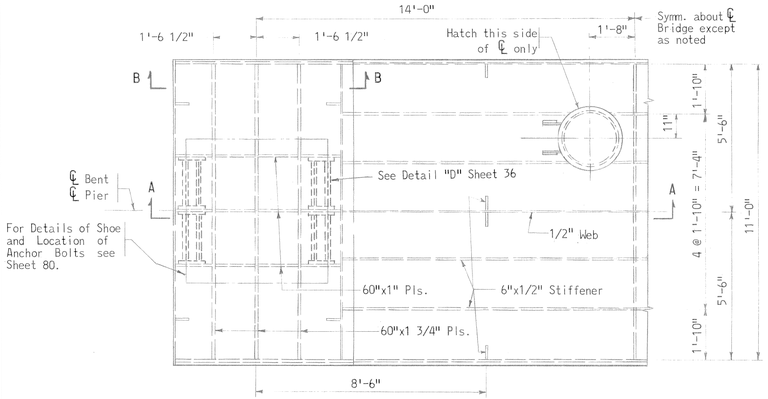

PLAN

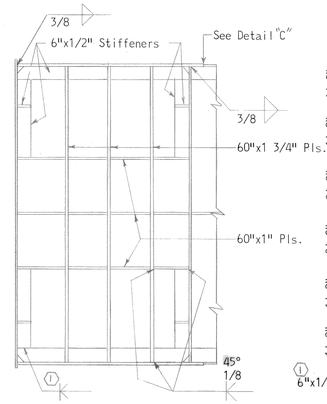

SECTION G-G

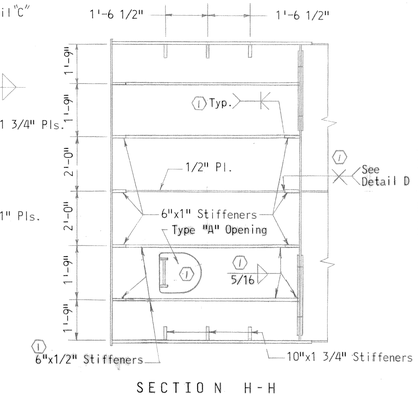

SECTION H-H

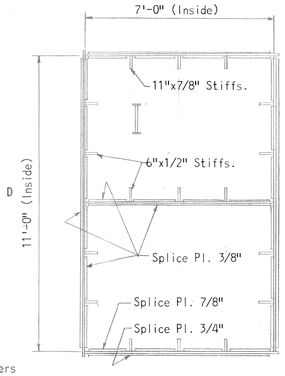

Note:
For Details of Stiffener Splices See Sheet 48.

SECTION J-J

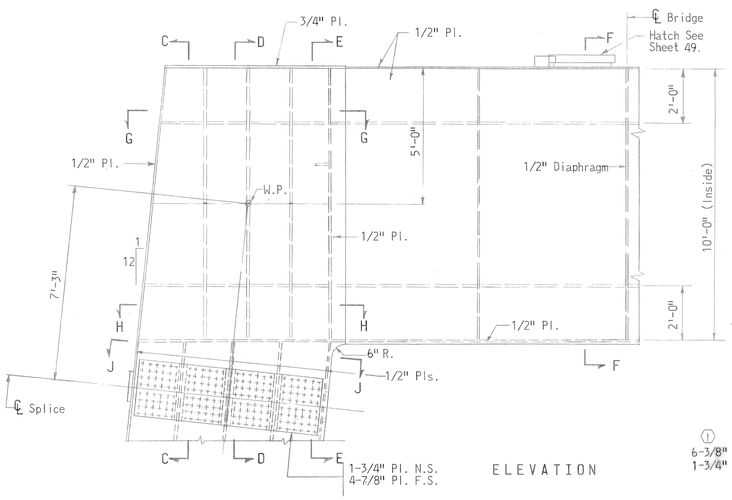

ELEVATION

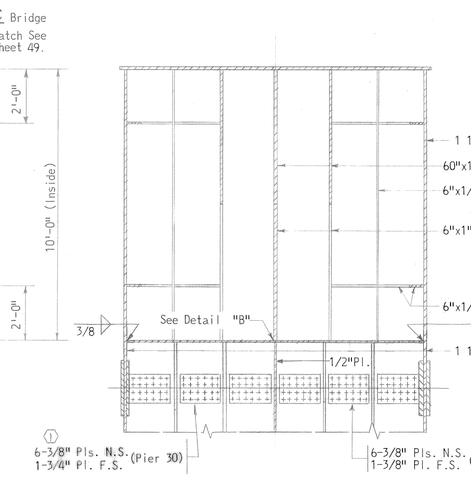

SECTION C-C

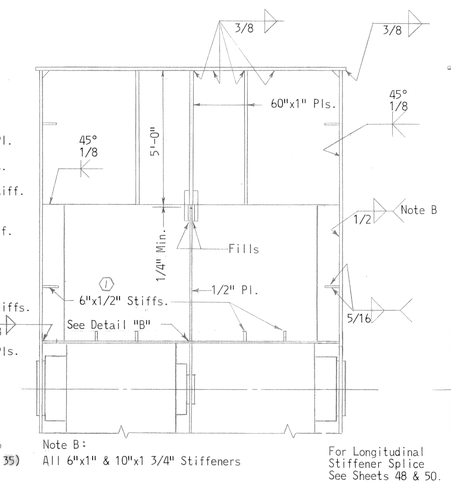

SECTION D-D

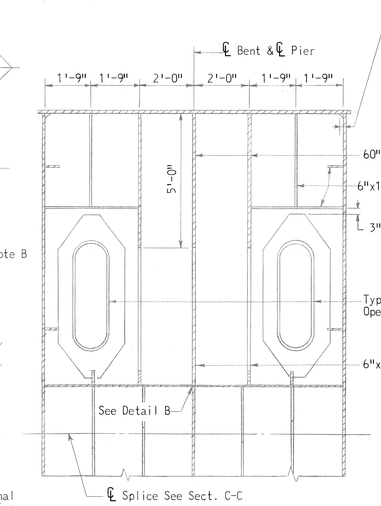

SECTION E-E

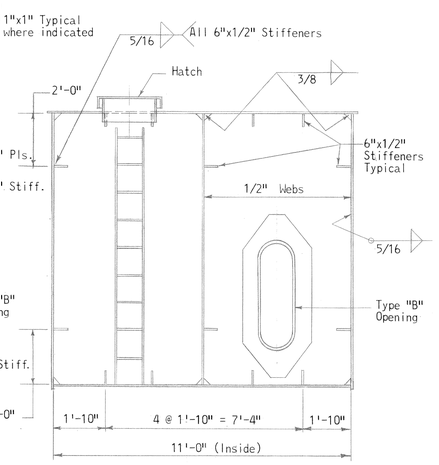

SECTION F-F

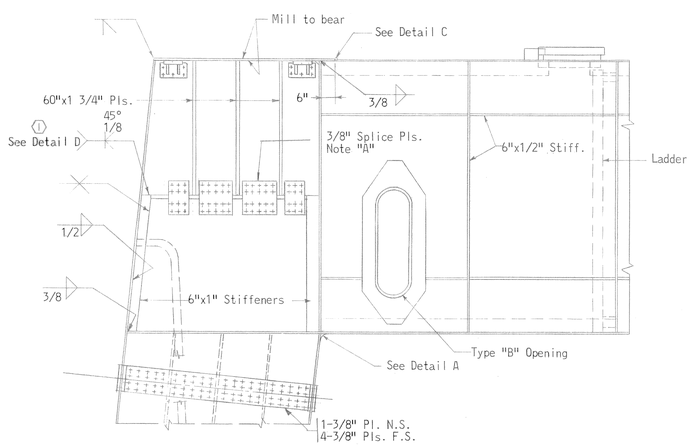

SECTION A-A

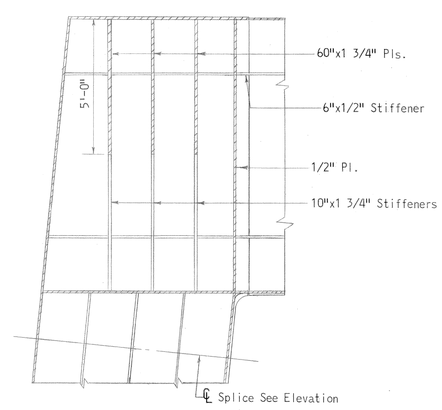

SECTION B-B

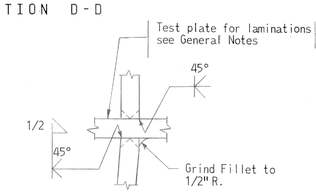

DETAIL "A"
No Scale

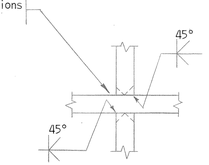

DETAIL "B"
No Scale

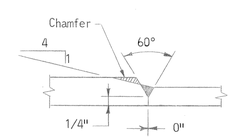

DETAIL "C"
No Scale

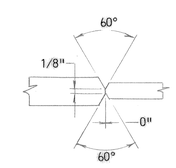

DETAIL "D"
No Sacale
(1)

NOTES:

1. For General Notes See Sheet 7.
2. Note "A": Splice indicated by Note "A" to be made after all superstructure dead load is in place. Holes to be subpunched and reamed in the field.
3. All bolts to be 7/8" ϕ H.S. Bolts unless otherwise noted.

AS BUILT DRAWING

STATE OF MARYLAND
STATE ROADS COMMISSION
BALTIMORE, MD.
WM. PRESTON LANE, JR. MEMORIAL BRIDGE
SANDY POINT-KENT ISLAND

DETAILS AT TOP STEEL BENTS 30 & 35

SCALE: 3/8"=1'-0" & As Shown DATE: JULY, 1969 CONTRACT: PB 13-1

(1) AS BUILT DWG. J.G.L. 5/76
REVISIONS

J. E. GREINER COMPANY, INC.
CONSULTING ENGINEERS
BALTIMORE, MARYLAND

SHEET 35 OF 149

	MADE BY	CHECKED BY
C-1100 DESIGN	EFC	EFC
DRAWING	EFC	EFC
TRACING	EFC	EFC
QUANTITIES	EFC	EFC
IN CHARGE	EFC	EFC

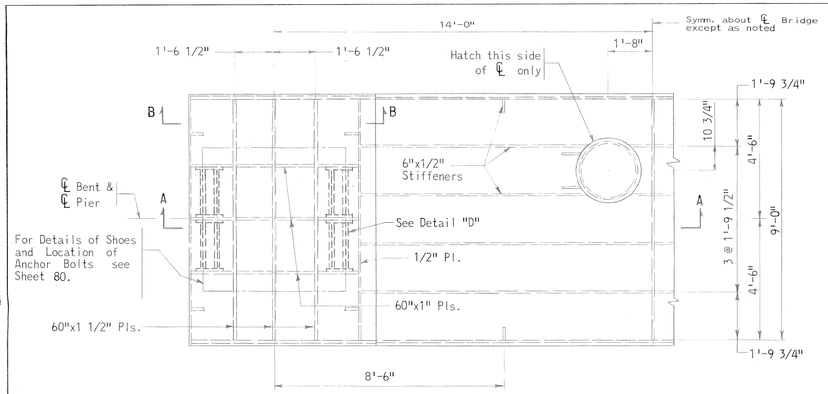

PLAN

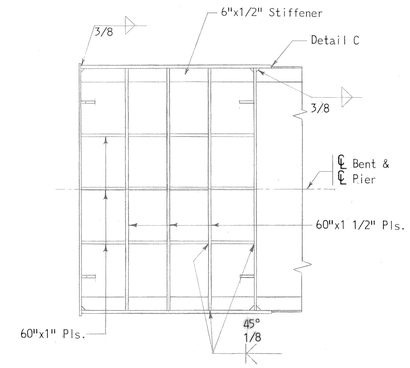

SECTION G-G

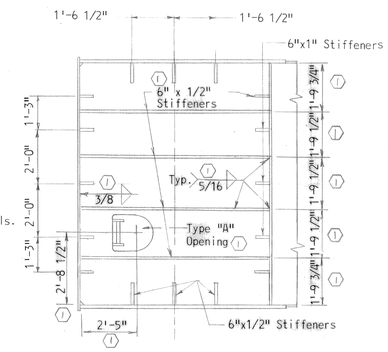

SECTION H-H

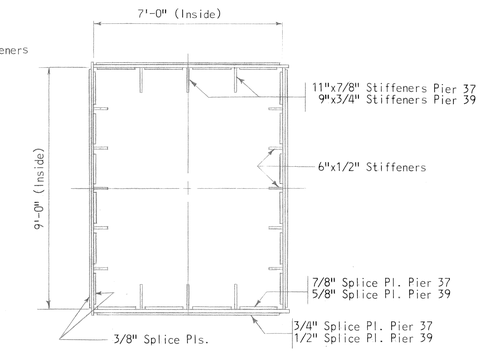

SECTION J-J

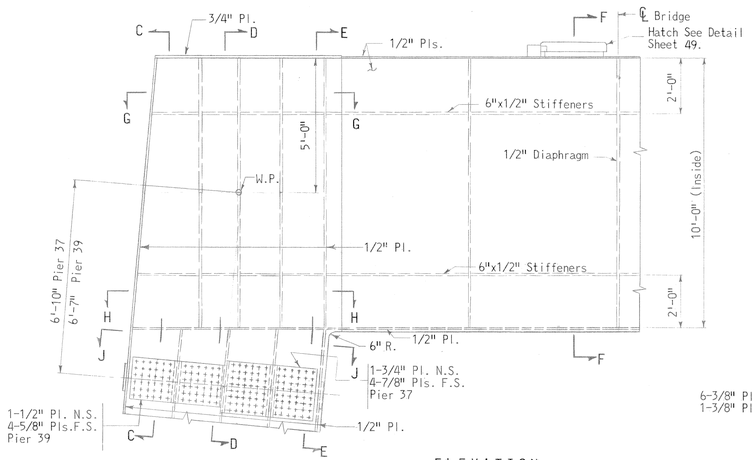

ELEVATION

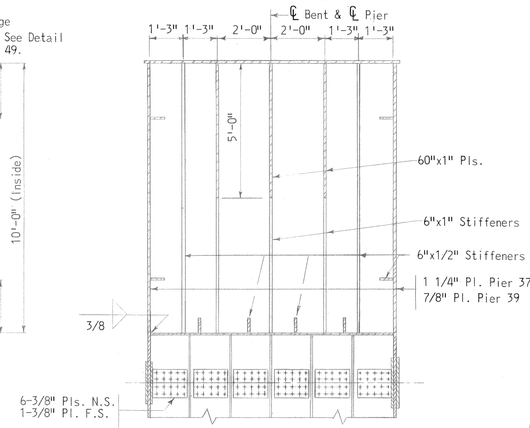

SECTION C-C

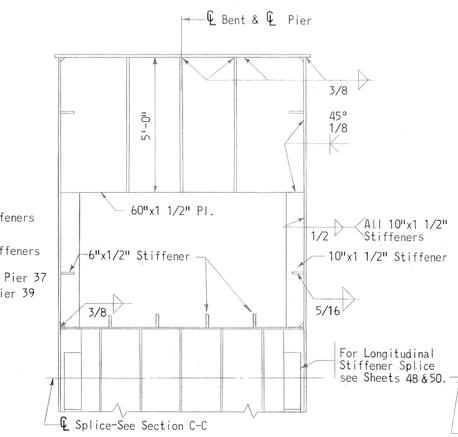

SECTION D-D

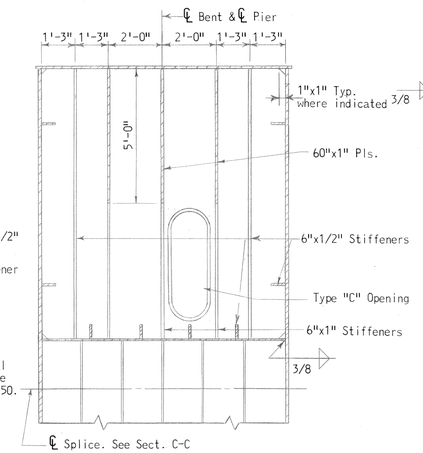

SECTION E-E

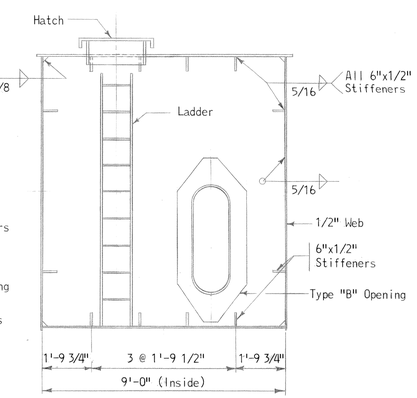

SECTION F-F

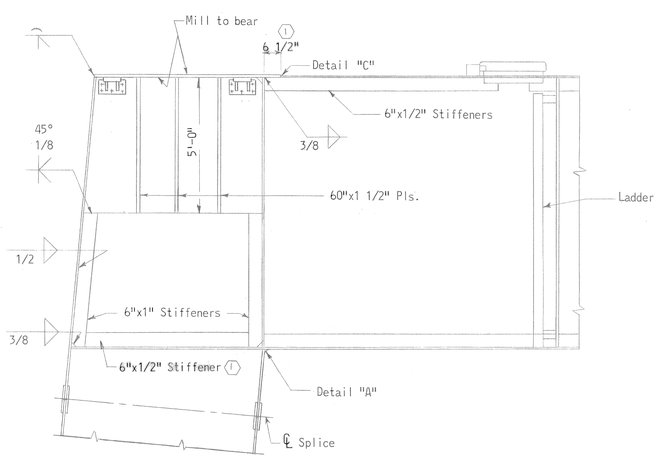

SECTION A-A

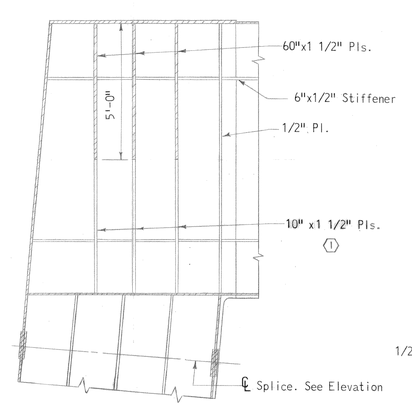

SECTION B-B

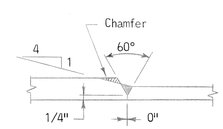

DETAIL "C"
No Scale

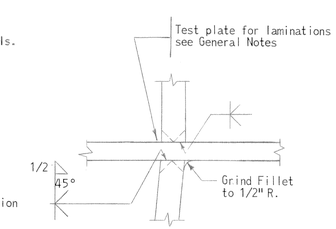

DETAIL "A"
No Scale

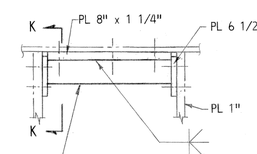

DETAIL D

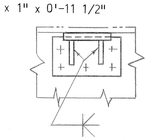

SECTION K-K

Scale: 1" = 1'-0"

NOTES:

1. For General Notes see Sheet 7.
2. All Bolts to be 7/8" Φ H.S. Bolts unless otherwise noted.

AS BUILT DRAWING

STATE OF MARYLAND
STATE ROADS COMMISSION
BALTIMORE, MD.
WM. PRESTON LANE, JR. MEMORIAL BRIDGE
SANDY POINT–KENT ISLAND

DETAILS AT TOP STEEL BENTS 37 & 39

SCALE: 3/8"=1'-0" & As Shown | DATE: JULY, 1969 | CONTRACT: PB 13-1

① AS BUILT DWG. J.G.L. 3/76
REVISIONS

J. E. GREINER COMPANY, INC.
CONSULTING ENGINEERS
BALTIMORE, MARYLAND

SHEET 36 OF 149

C-1100	MADE BY	CHECKED BY
DESIGN	EFC	
DRAWING	EFC	
TRACING	CEB	
QUANTITIES	EFC	
IN CHARGE		

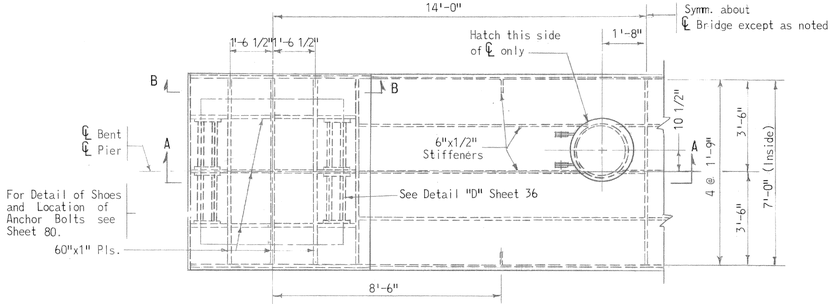

PLAN

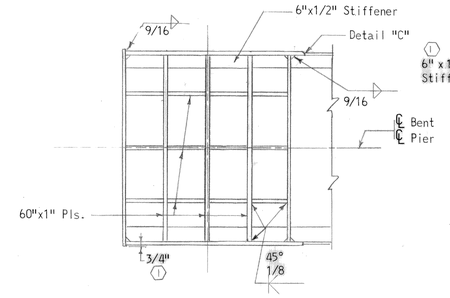

SECTION G-G

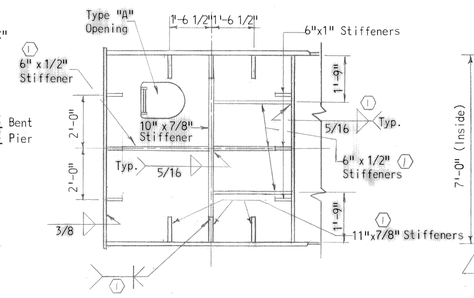

SECTION H-H

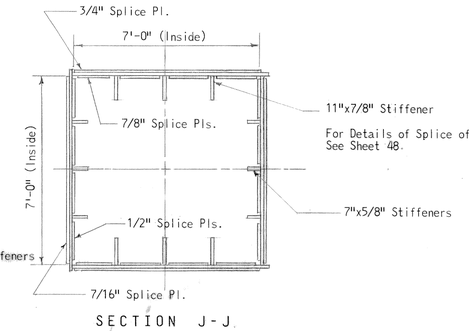

SECTION J-J

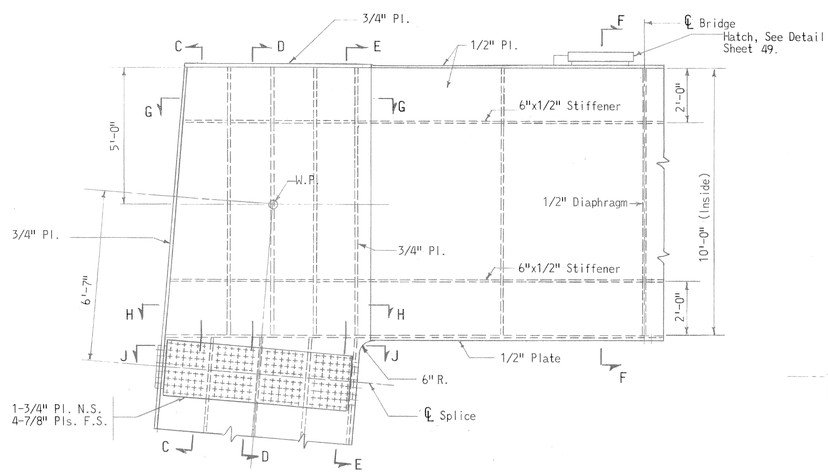

ELEVATION

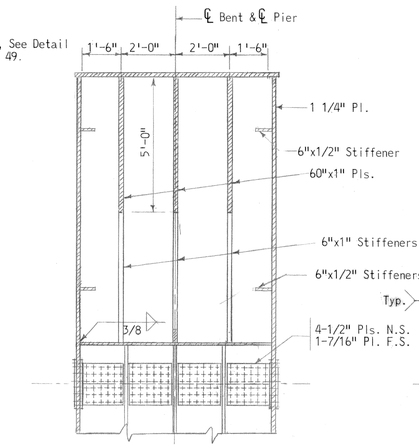

SECTION C-C

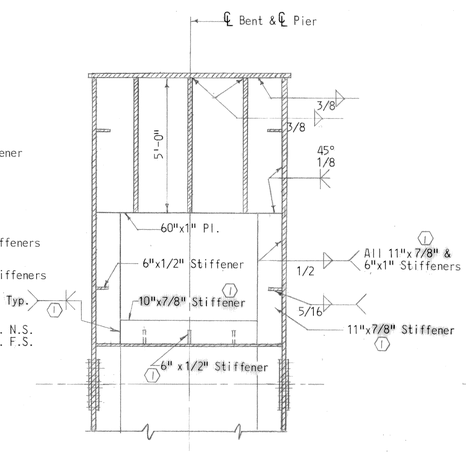

SECTION D-D

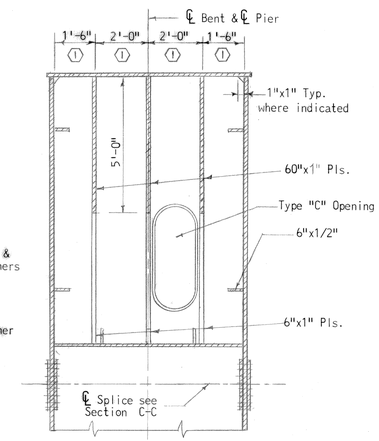

SECTION E-E

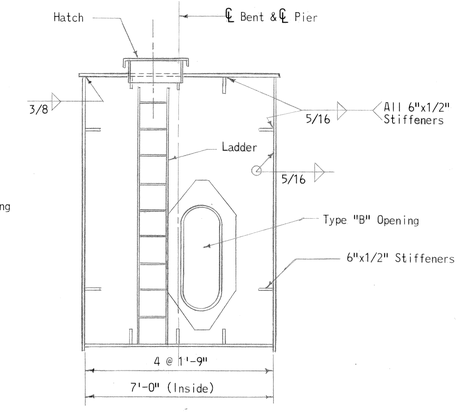

SECTION F-F

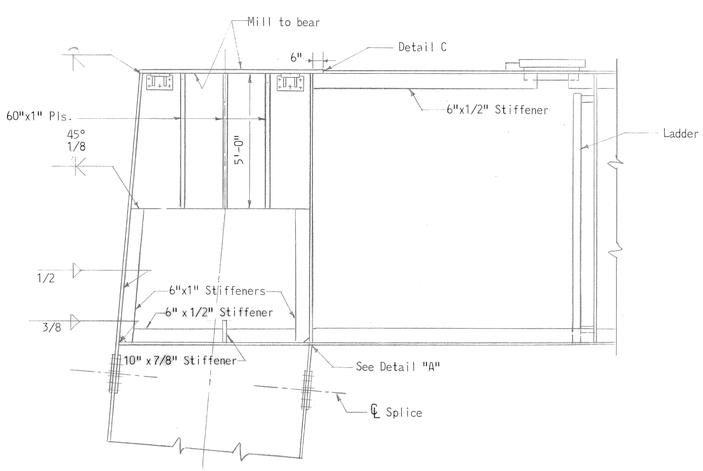

SECTION A-A

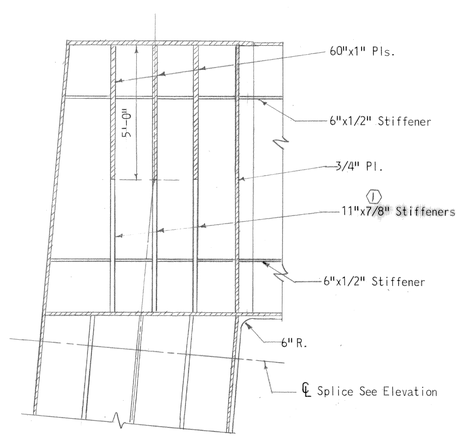

SECTION B-B

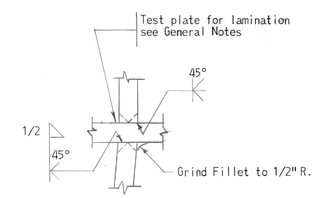

DETAIL "A"
No Scale

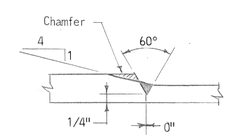

DETAIL "C"
No Scale

NOTES:

1. For General Notes See Sheet 7.
2. All bolts to be 7/8" ϕ H.S. Bolts unless otherwise noted.

AS BUILT DRAWING

STATE OF MARYLAND
STATE ROADS COMMISSION
BALTIMORE, MD.
WM. PRESTON LANE, JR. MEMORIAL BRIDGE
SANDY POINT-KENT ISLAND

DETAILS AT TOP STEEL BENT 41

SCALE: 3/8"=1'-0" & As Shown DATE: JULY, 1969 CONTRACT: PB 13-1

J.E. GREINER COMPANY, INC.
CONSULTING ENGINEERS
BALTIMORE, MARYLAND

SHEET 37 OF 149

(1) AS BUILT DWG. J.G.L. 3/76
REVISIONS

C-1100	MADE BY	CHECKED BY
DESIGN	C.R.	C.D.S.
DRAWING	T.S.	C.R.T.
TRACING	P.G.T.	P.G.T.
QUANTITIES	C.B.M. & J.W.H.	R.G.W.
IN CHARGE		

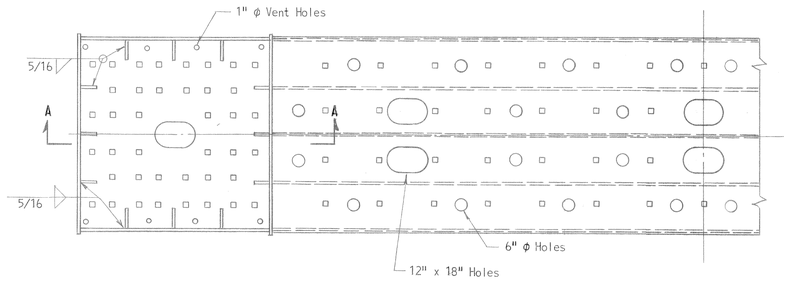

PLAN

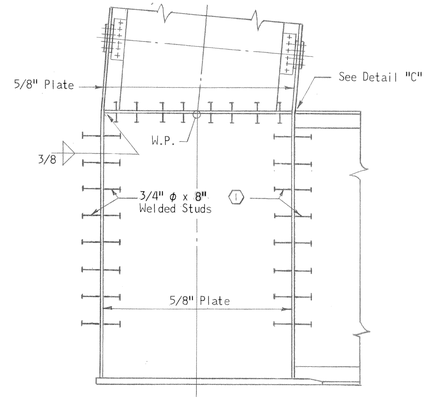

SECTION A-A

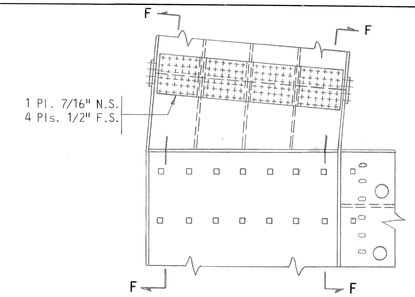

ELEVATION

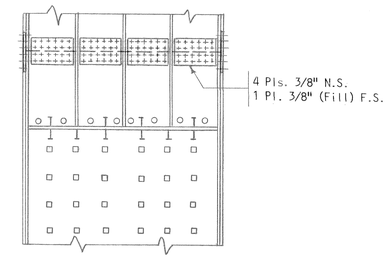

SECTION F-F

SPLICE - PIER 24

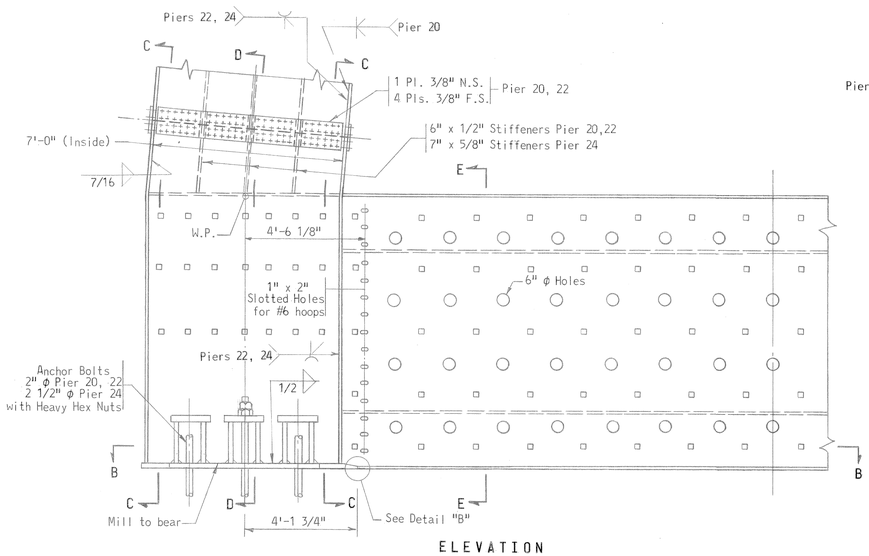

ELEVATION

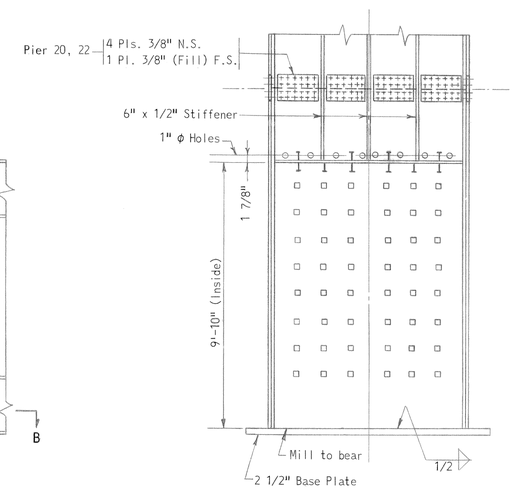

SECTION C-C

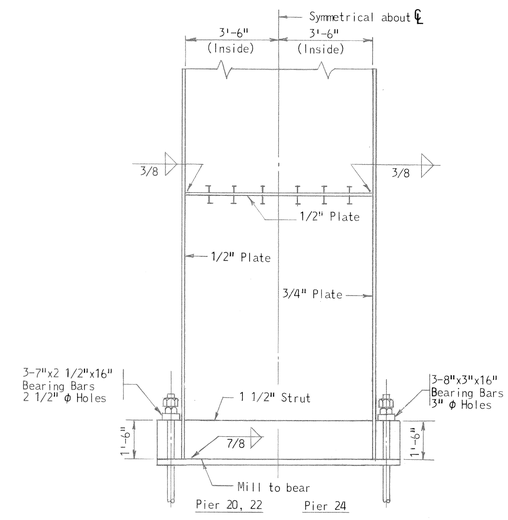

SECTION D-D

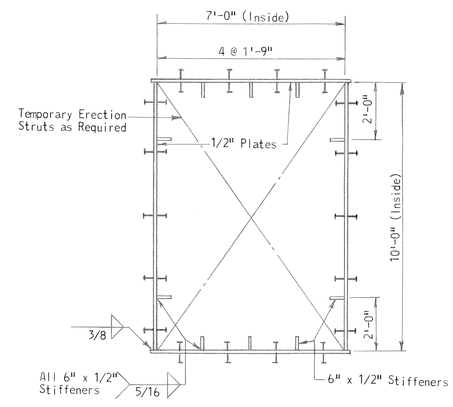

SECTION E-E

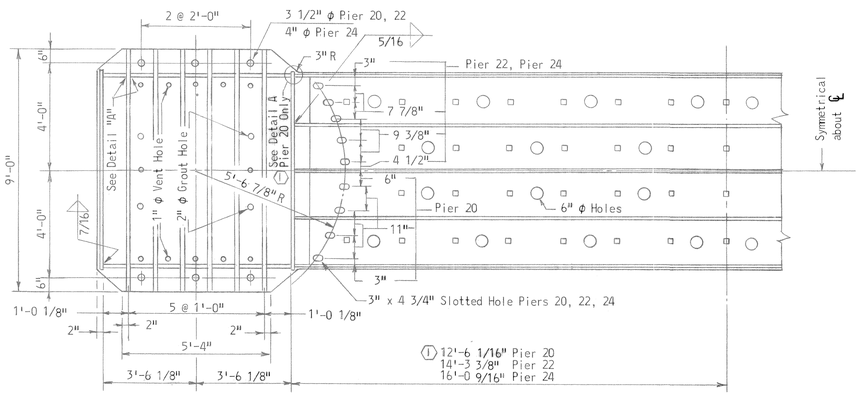

SECTION B-B

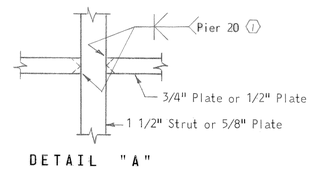

DETAIL "A"
No Scale

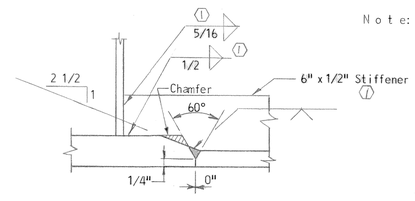

DETAIL "B"
No Scale

Note: All welded studs to be 3/4" ϕ x 3" except as noted.

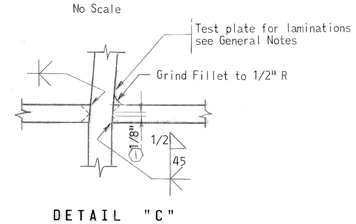

DETAIL "C"
No Scale

NOTES:

1. For General Notes see Sheet 7.
2. All bolts to be 7/8" ϕ H.S. Bolts unless otherwise noted.
3. Anchor Bolts shall meet the requirements of ASTM A-307.

AS BUILT DRAWING

STATE OF MARYLAND
STATE ROADS COMMISSION
BALTIMORE, MD.
WM. PRESTON LANE, JR. MEMORIAL BRIDGE
SANDY POINT-KENT ISLAND

DETAILS AT BOTTOM STEEL BENTS 20, 22 & 24

SCALE: 3/8" = 1'-0" DATE: JULY, 1969 CONTRACT: PB 12-1

1 AS BUILT DWG. J.G.L. 3/76
REVISIONS

J. E. GREINER COMPANY, INC.
CONSULTING ENGINEERS
BALTIMORE, MARYLAND

SHEET 38 OF 149

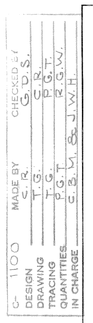

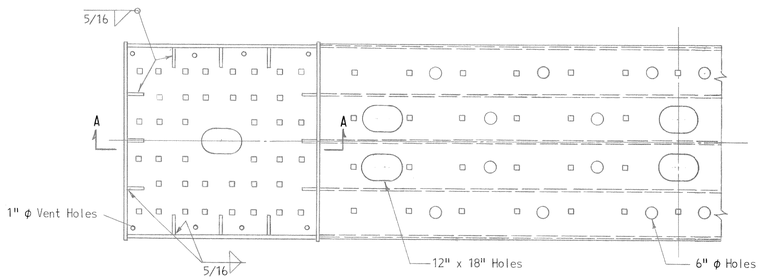

PLAN

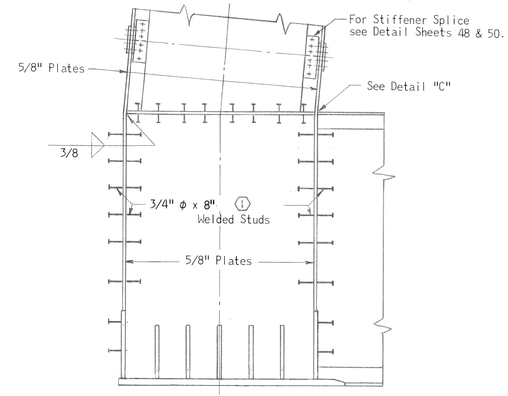

SECTION A-A

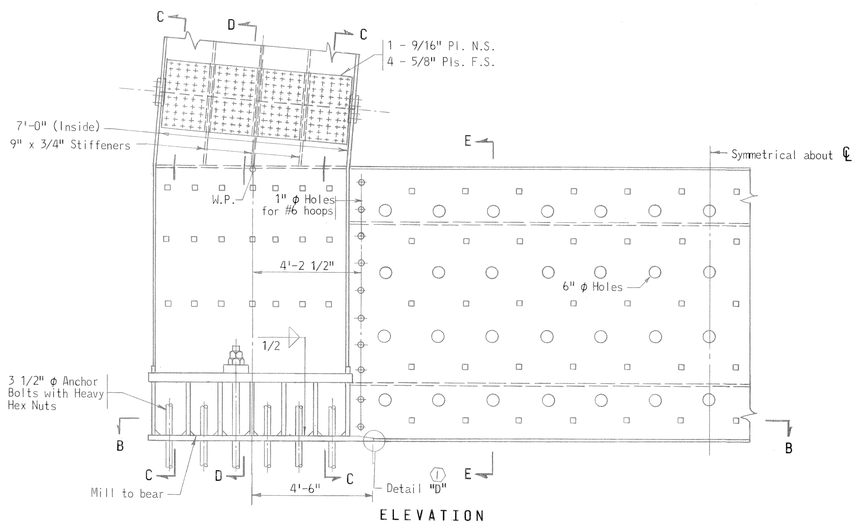

ELEVATION

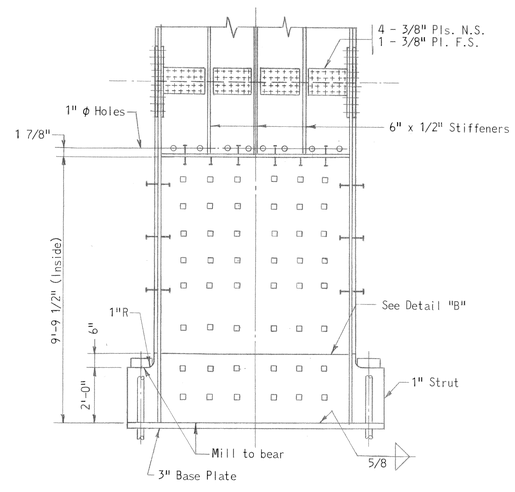

SECTION C-C

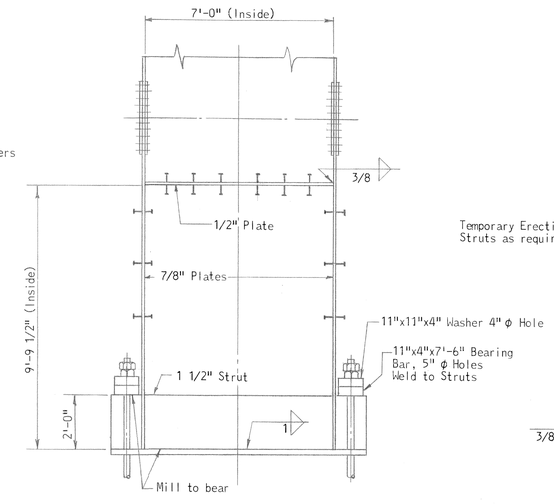

SECTION D-D

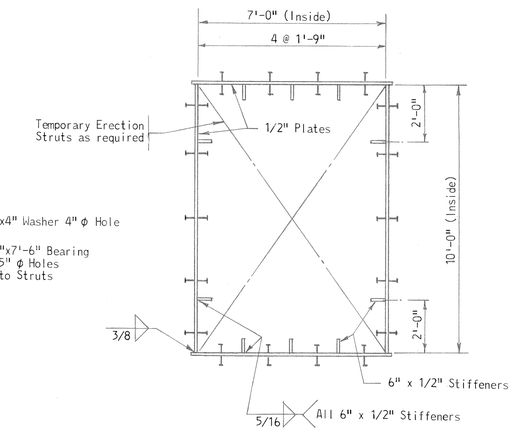

SECTION E-E

Note: All welded studs to be 3/4" ϕ x 3" except as noted. (1)

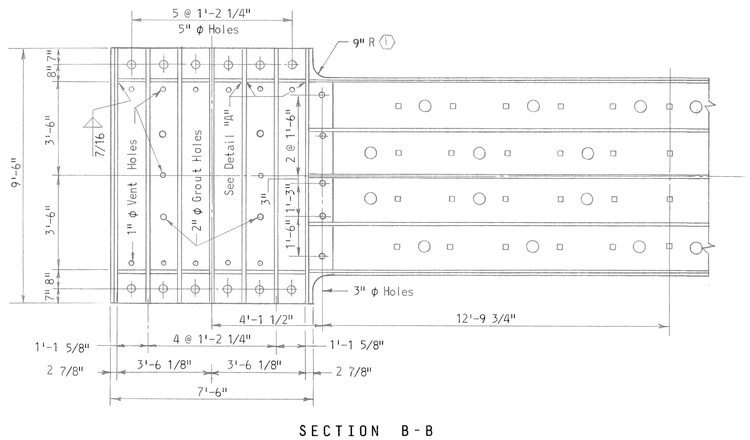

SECTION B-B

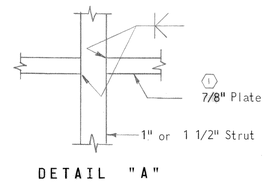

DETAIL "A"
No Scale

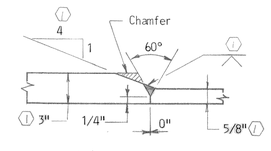

DETAIL "B"
No Scale

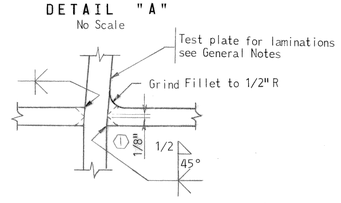

DETAIL "C"
No Scale

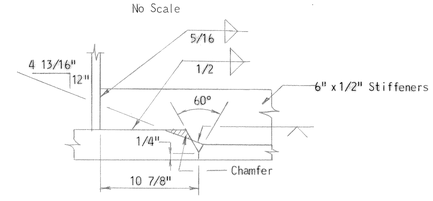

DETAIL "D"
No Scale
(1)

NOTES:

1. For General Notes see Sheet 7.
2. All bolts to be 7/8" ϕ H.S. Bolts unless otherwise noted.
3. Anchor Bolts shall meet the requirements of ASTM A-307.

AS BUILT DRAWING

STATE OF MARYLAND
STATE ROADS COMMISSION
BALTIMORE, MD.
WM. PRESTON LANE, JR. MEMORIAL BRIDGE
SANDY POINT-KENT ISLAND

DETAILS AT BOTTOM STEEL BENT 21

SCALE: 3/8"=1'-0" & As Shown DATE: JULY, 1969 CONTRACT: PB 12-1

(1) AS BUILT DWG. J.G.L. 3/76
REVISIONS

J. E. GREINER COMPANY, INC.
CONSULTING ENGINEERS
BALTIMORE, MARYLAND

SHEET 39 OF 149

	MADE BY	CHECKED BY
DESIGN	T.G.	C.D.S.
DRAWING	T.G.	P.G.T.
TRACING	P.G.T.	R.G.W.
QUANTITIES	C.D.M.	G.J.W.H.
IN CHARGE		

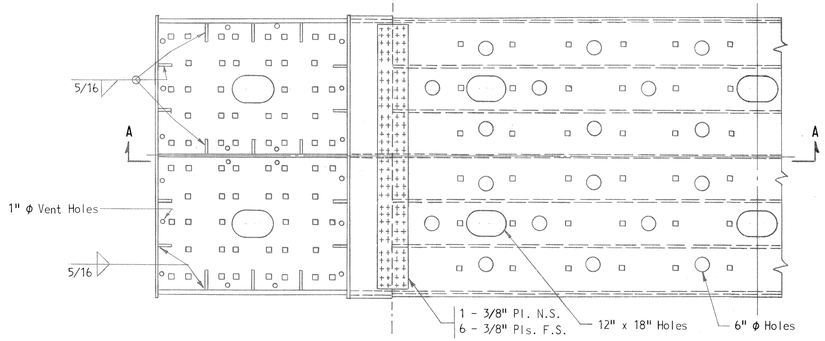

PLAN

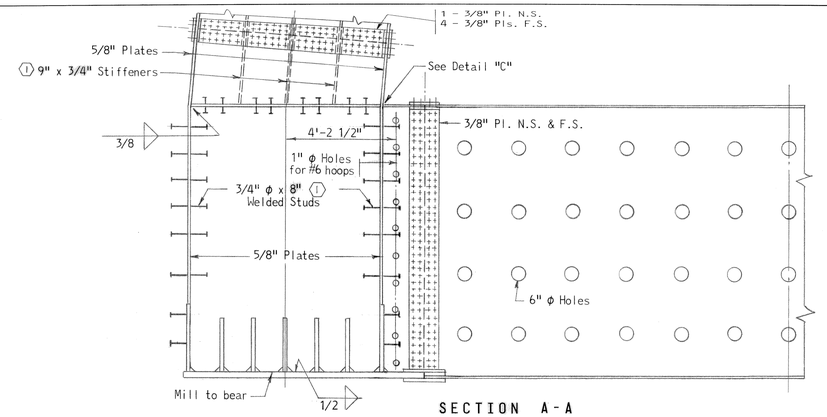

SECTION A-A

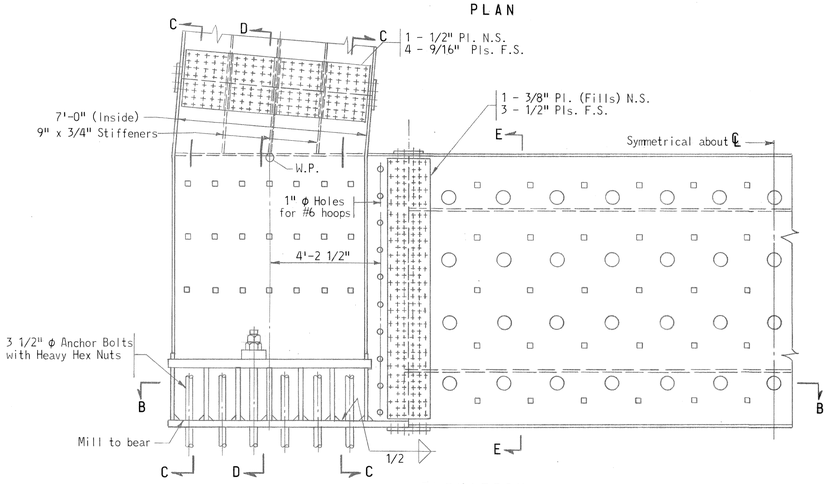

ELEVATION

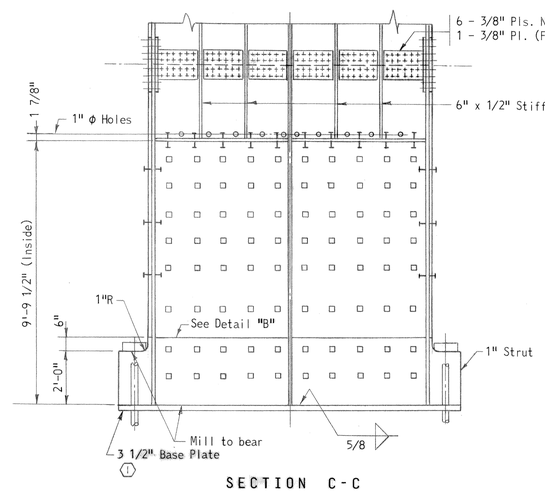

SECTION C-C

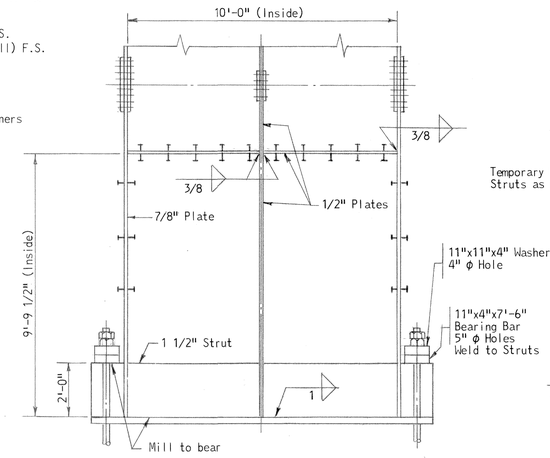

SECTION D-D

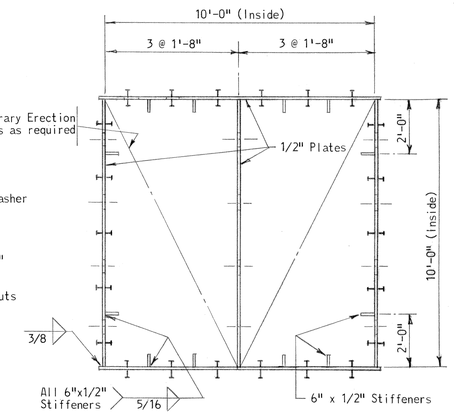

SECTION E-E

Note: All welded studs to be 3/4" φ x 3" except as noted (1)

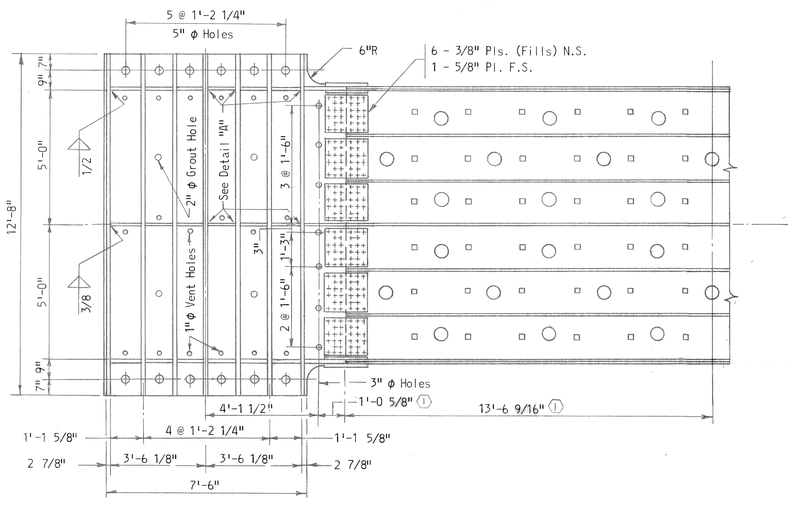

SECTION B-B

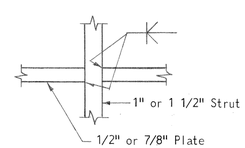

DETAIL "A"
No Scale

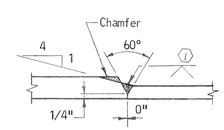

DETAIL "B"
No Scale

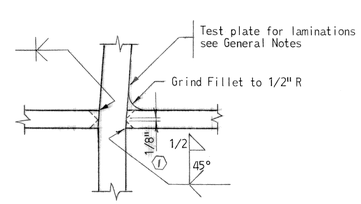

DETAIL "C"
No Scale

NOTES:

1. For General Notes see Sheet 7.
2. All bolts to be 7/8" φ H.S. Bolts unless otherwise noted.
3. Anchor bolts shall meet the requirements of ASTM A-307.

AS BUILT DRAWING

STATE OF MARYLAND
STATE ROADS COMMISSION
BALTIMORE, MD.
WM. PRESTON LANE, JR. MEMORIAL BRIDGE
SANDY POINT-KENT ISLAND

DETAILS AT BOTTOM STEEL BENT 23

SCALE: 3/8"=1'-0" & As Shown DATE: JULY, 1969 CONTRACT: PB 12-1

(1) AS BUILT DWG. J.G.L. 11-11-74

REVISIONS

J. E. GREINER COMPANY, INC.
CONSULTING ENGINEERS
BALTIMORE, MARYLAND

SHEET 40 OF 149

C- 1100	
MADE BY	C.R.S.
DESIGN	T.G.
DRAWING	T.G.
TRACING	P.G.T.
QUANTITIES	P.G.T. & C.B.J.
IN CHARGE	J.W.H.
CHECKED BY	

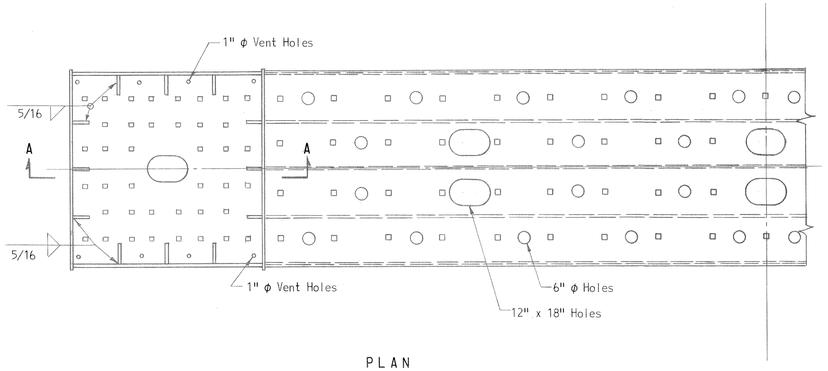

PLAN

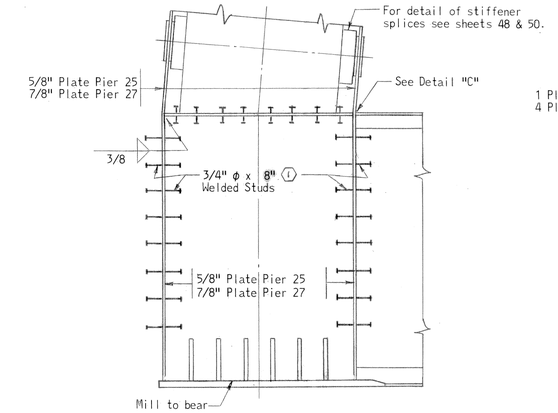

SECTION A-A

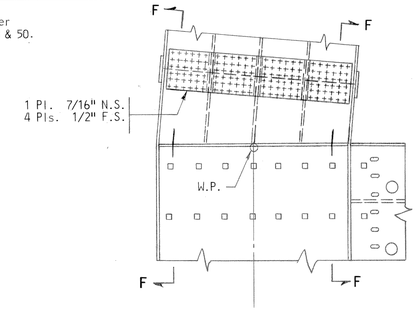

ELEVATION

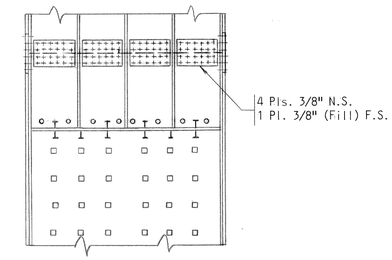

SECTION F-F

SPLICE - PIER 25

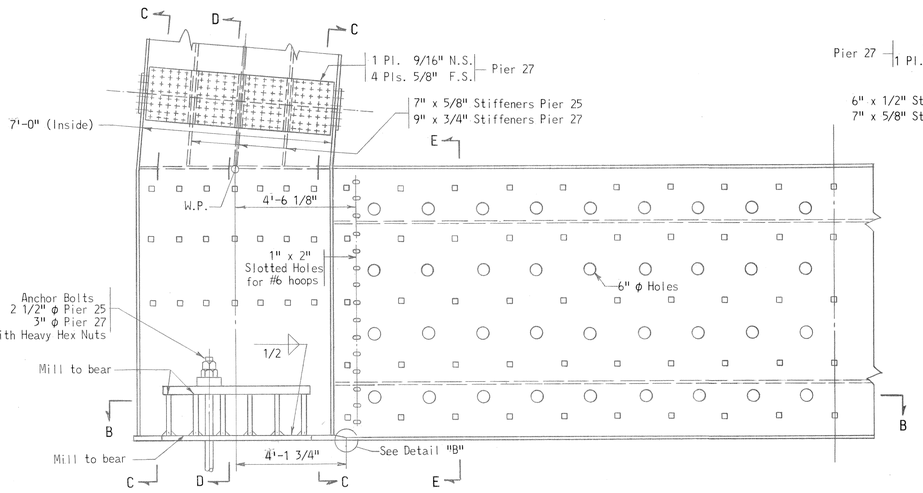

ELEVATION

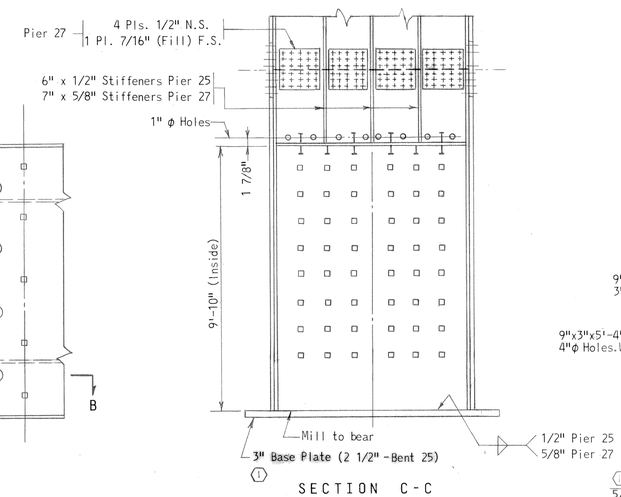

SECTION C-C

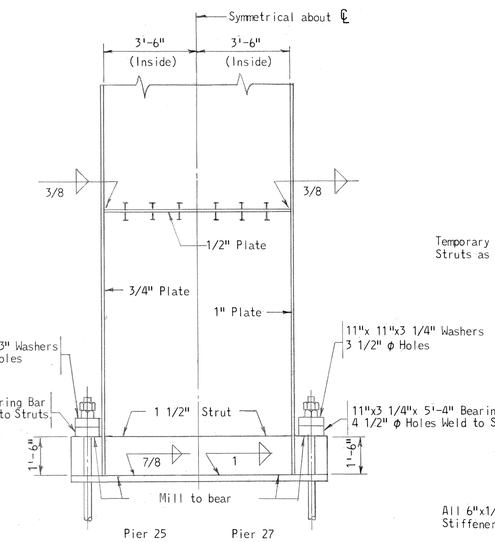

SECTION D-D

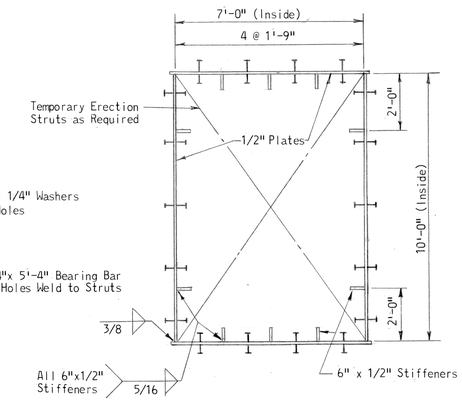

SECTION E-E

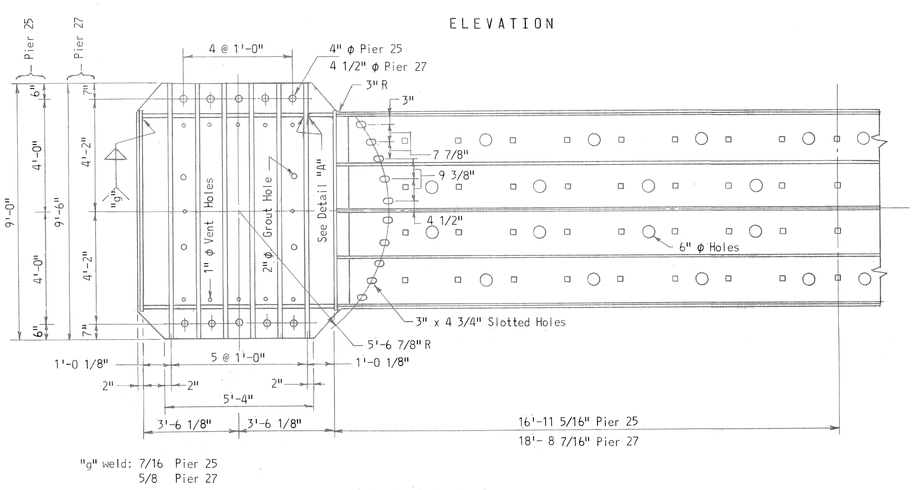

"g" weld: 7/16 Pier 25
5/8 Pier 27

SECTION B-B

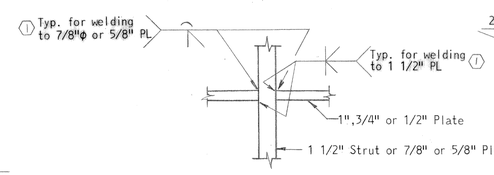

DETAIL "A"
No Scale

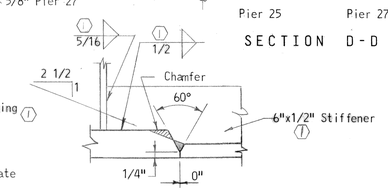

DETAIL "B"
No Scale

Note: All welded studs to be 3/4" ϕ x 3" except as noted. ①

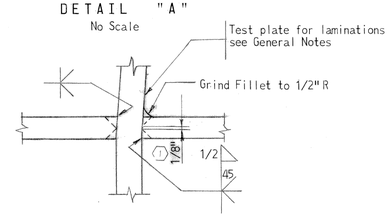

DETAIL "C"
No Scale

NOTES:

1. For General Notes see Sheet 7.
2. All bolts to be 7/8" ϕ H.S. Bolts unless otherwise noted.
3. Anchor bolts shall be meet the requirements of ASTM A-307.

AS BUILT DRAWING

STATE OF MARYLAND
STATE ROADS COMMISSION
BALTIMORE, MD.
WM. PRESTON LANE, JR. MEMORIAL BRIDGE
SANDY POINT-KENT ISLAND

DETAILS AT BOTTOM STEEL BENTS 25 & 27

SCALE: 3/8"=1'-0" & As Shown DATE: JULY, 1969 CONTRACT: PB 12-1

① AS BUILT DWG. J.G.L. 11-11-74
REVISIONS

J. E. GREINER COMPANY, INC.
CONSULTING ENGINEERS
BALTIMORE, MARYLAND

SHEET 41 OF 149

C-1100	MADE BY	CHECKED BY
DESIGN	C.R.	G.D.S.
DRAWING	T.G.	C.R.
TRACING	T.G.T.	R.G.T.
QUANTITIES	T.G.T.	R.G.W.
IN CHARGE	G.B.M.	B.J.M.H.

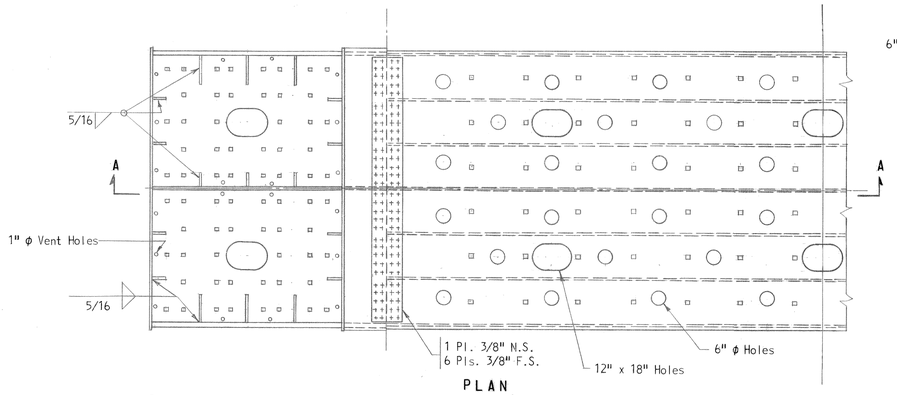

PLAN

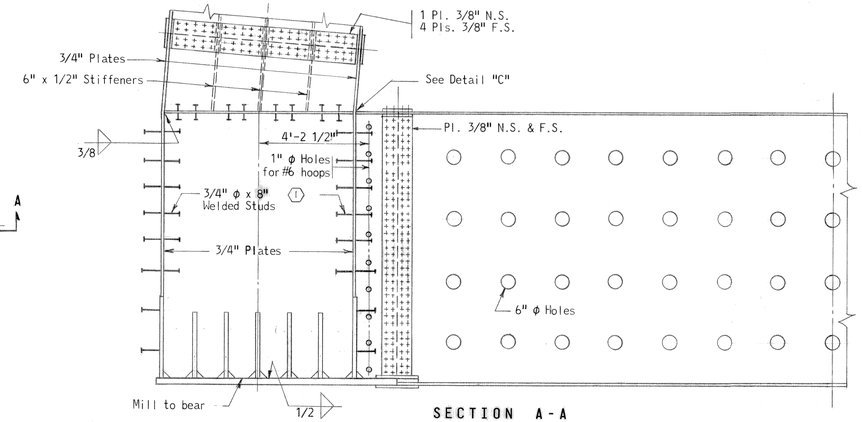

SECTION A-A

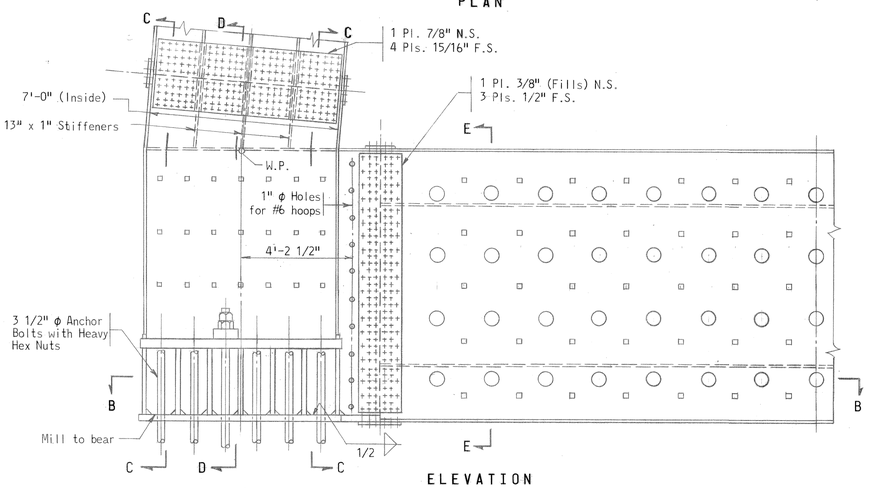

ELEVATION

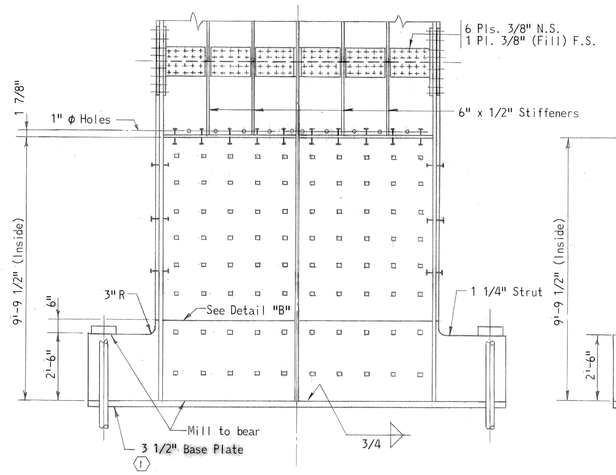

SECTION C-C

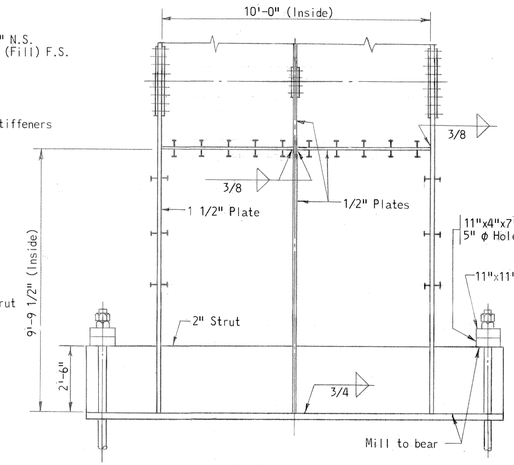

SECTION D-D

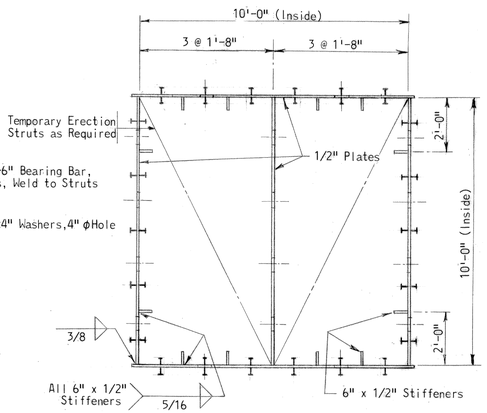

SECTION E-E

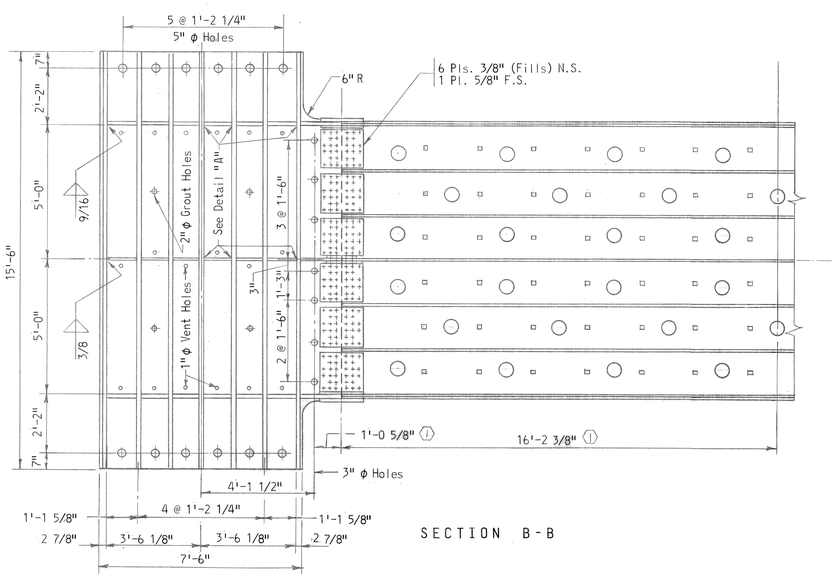

SECTION B-B

Note: All welded studs to be 3/4" φ x 3" except as noted. (1)

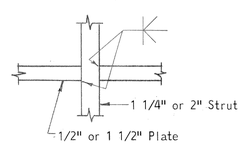

DETAIL "A"
No Scale

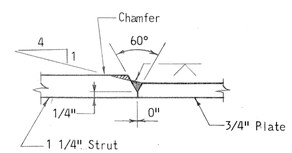

DETAIL "B"
No Scale

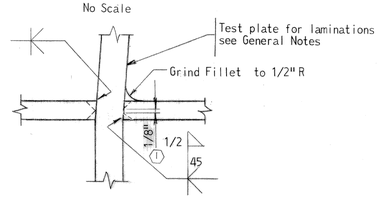

DETAIL "C"
No Scale

NOTES:

1. For General Notes see Sheet 7.
2. All bolts to be 7/8" φ H.S. Bolts unless otherwise noted.
3. Anchor bolts shall meet the requirements of ASTM A-307.

AS BUILT DRAWING

STATE OF MARYLAND
STATE ROADS COMMISSION
BALTIMORE, MD.
WM. PRESTON LANE, JR. MEMORIAL BRIDGE
SANDY POINT-KENT ISLAND

DETAILS AT BOTTOM STEEL BENT 26

SCALE: 3/8"=1'-0" & As Shown | DATE: JULY, 1969 | CONTRACT: PB 12-1

(1) AS BUILT DWG. J.G.L. 11-11-74
REVISIONS

J.E. GREINER COMPANY, INC.
CONSULTING ENGINEERS
BALTIMORE, MARYLAND

SHEET 42 OF 149

C-1100	MADE BY	CHECKED BY
DESIGN	GCB	FCS
DRAWING	SH	GCB
TRACING	SH	
QUANTITIES	FC	
IN CHARGE	CB	

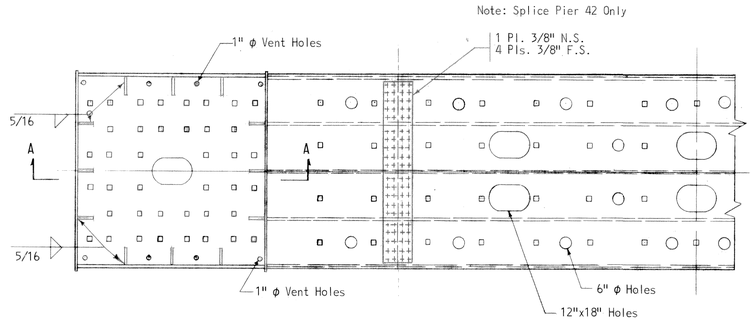

PLAN

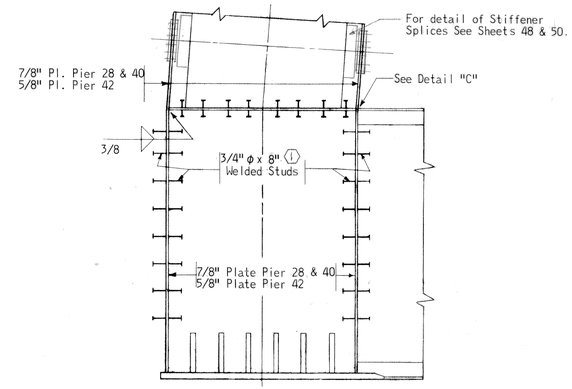

SECTION A-A

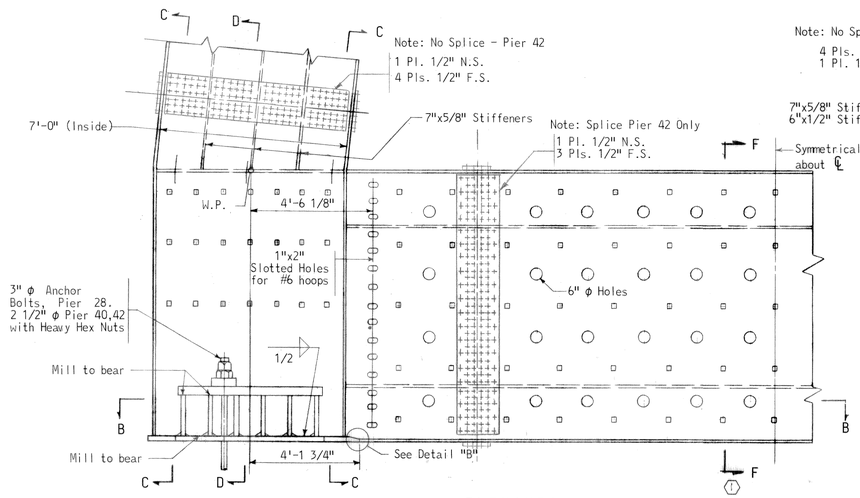

ELEVATION

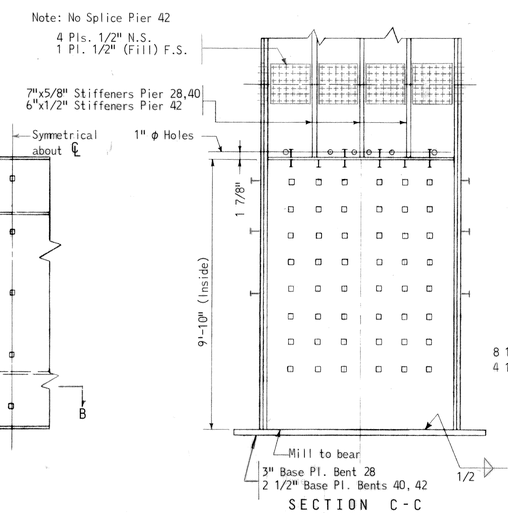

SECTION C-C

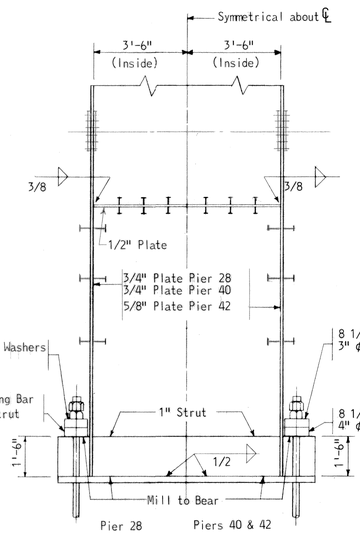

SECTION D-D

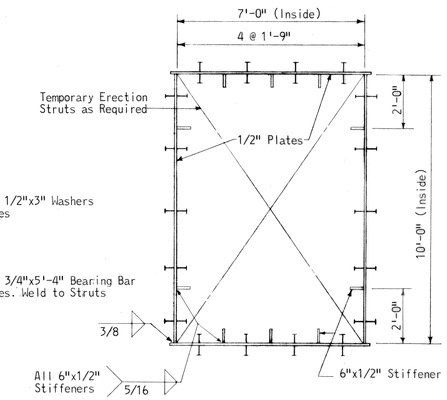

SECTION F-F

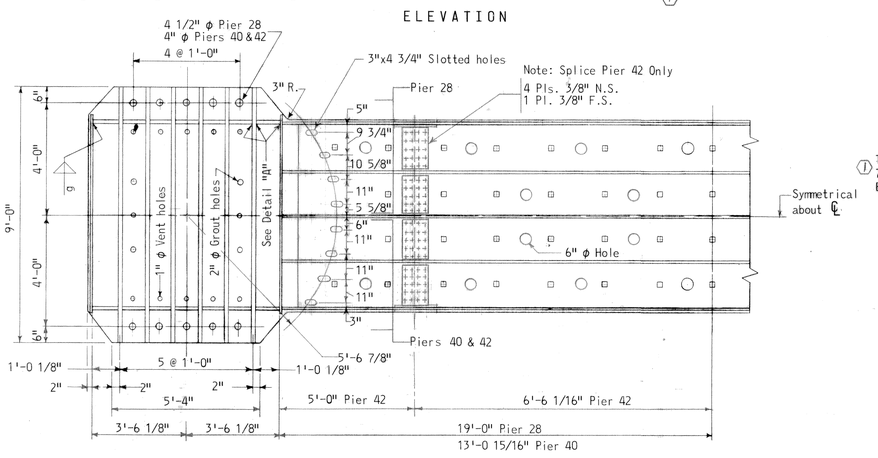

g weld: 9/16" Piers 28 & 40
1/2" Pier 42

SECTION B-B

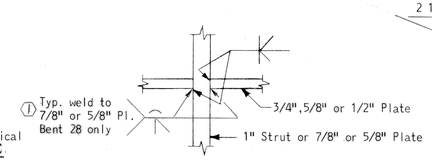

DETAIL "A"

No Scale

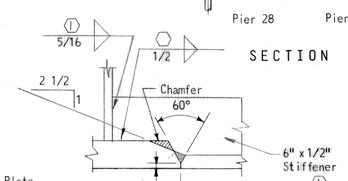

DETAIL "B"

No Scale

Note: All welded studs to be 3/4" φ x 3" except as noted ①

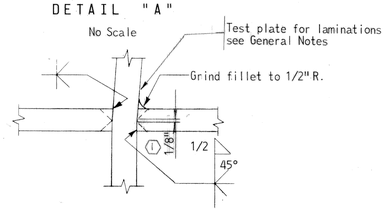

DETAIL "C"

No Scale

NOTES:

1. For General Notes See Sheet 7.
2. All bolts to be 7/8" φ H.S. Bolts unless otherwise noted.
3. Anchor bolts shall meet the requirements of ASTM A-307.

AS BUILT DRAWING

Steel Bent 28 to be constructed under Contract PB 12-1
Steel Bents 40 & 42 to be constructed under Contract PB 13-1

STATE OF MARYLAND
STATE ROADS COMMISSION
BALTIMORE, MD.
WM. PRESTON LANE, JR. MEMORIAL BRIDGE
SANDY POINT-KENT ISLAND

DETAILS AT BOTTOM STEEL BENTS 28, 40 & 42

SCALE: 3/8"=1'-0" & As Shown DATE: JULY, 1969 CONTRACT: PB 12-1 & PB 13-1

① AS BUILT DWG. J. G. L. 11-11-74

REVISIONS

J. E. GREINER COMPANY, INC.
CONSULTING ENGINEERS
BALTIMORE, MARYLAND

SHEET 43 OF 149

	MADE BY	CHECKED BY
DESIGN		
DRAWING		
TRACING		
QUANTITIES		
IN CHARGE		

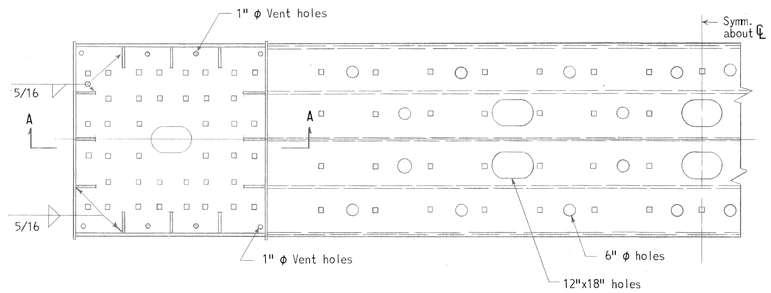

PLAN

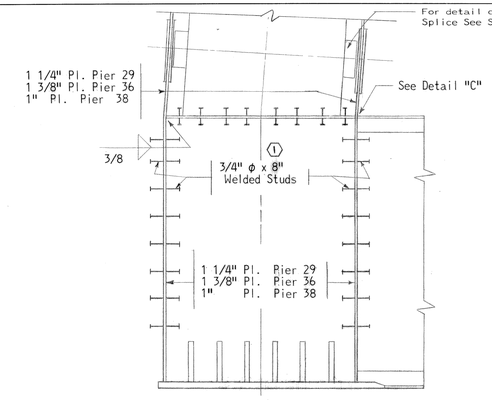

SECTION A-A

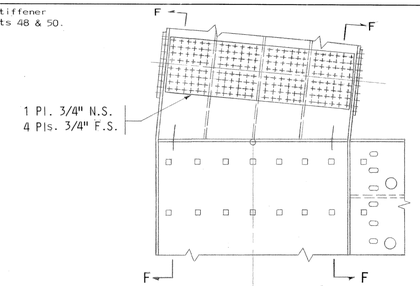

ELEVATION

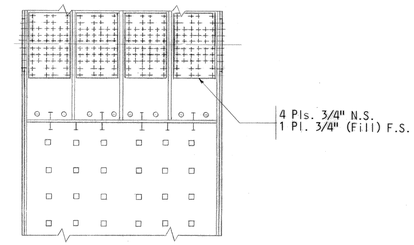

SECTION F-F

SPLICE - PIER 38

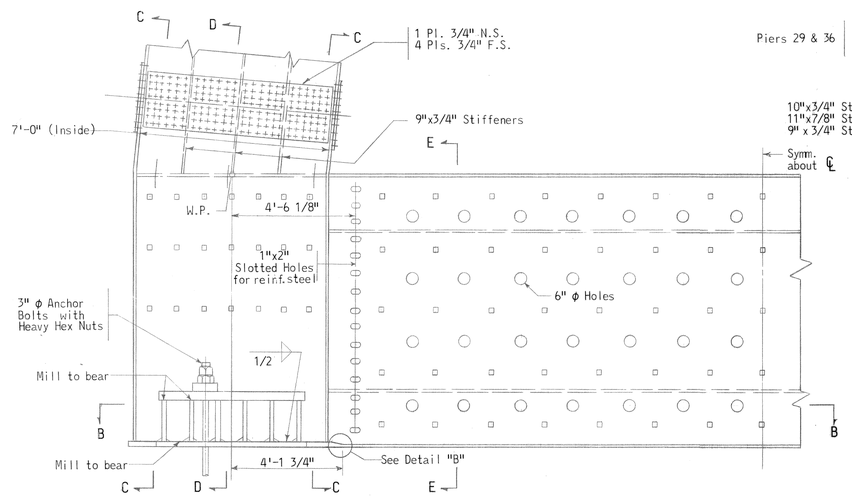

ELEVATION

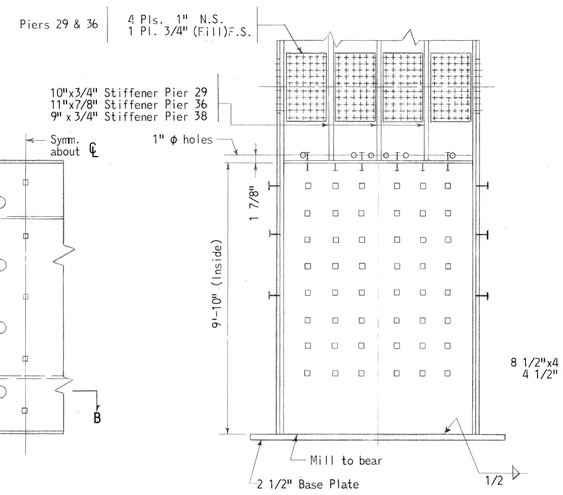

SECTION C-C

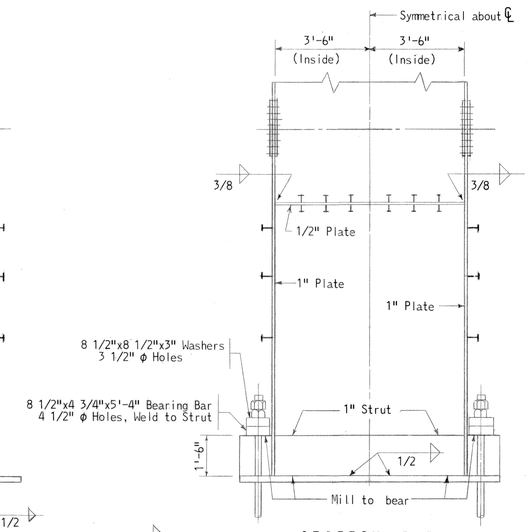

SECTION D-D

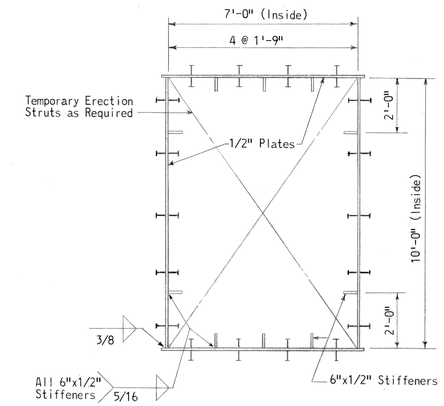

SECTION E-E

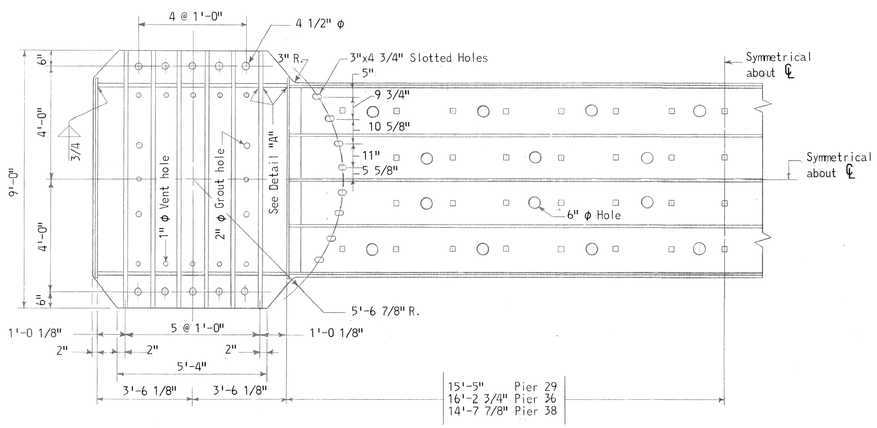

SECTION B-B

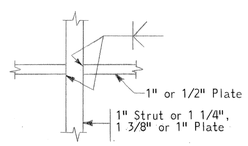

DETAIL "A"
No Scale

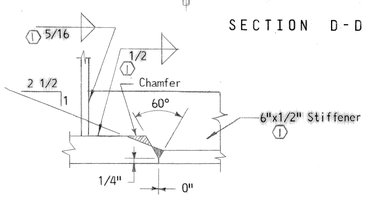

DETAIL "B"
No Scale

Note: All welded studs to be 3/4" φ x 3" except as noted. (1)

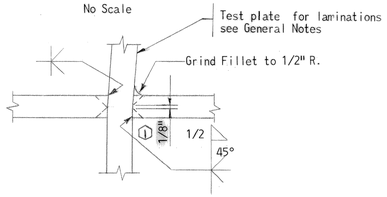

DETAIL "C"
No Scale

NOTES:

1. For General Notes See Sheet 7.
2. All bolts to be 7/8" φ H.S. Bolts unless otherwise noted.
3. Anchor bolts shall meet the requirements of ASTM A-307.

AS BUILT DRAWING

STATE OF MARYLAND
STATE ROADS COMMISSION
BALTIMORE, MD.
WM. PRESTON LANE, JR. MEMORIAL BRIDGE
SANDY POINT-KENT ISLAND

DETAILS AT BOTTOM STEEL BENTS 29, 36 & 38

SCALE: 3/8"=1'-0" & As Shown DATE: JULY, 1969 CONTRACT: PB 13-1

(1) AS BUILT DWG. J.G.L. 10-25-74
REVISIONS

J. E. GREINER COMPANY, INC.
CONSULTING ENGINEERS
BALTIMORE, MARYLAND

SHEET 44 OF 149

	MADE BY	CHECKED BY
DESIGN		
DRAWING		
TRACING		
QUANTITIES		
IN CHARGE		

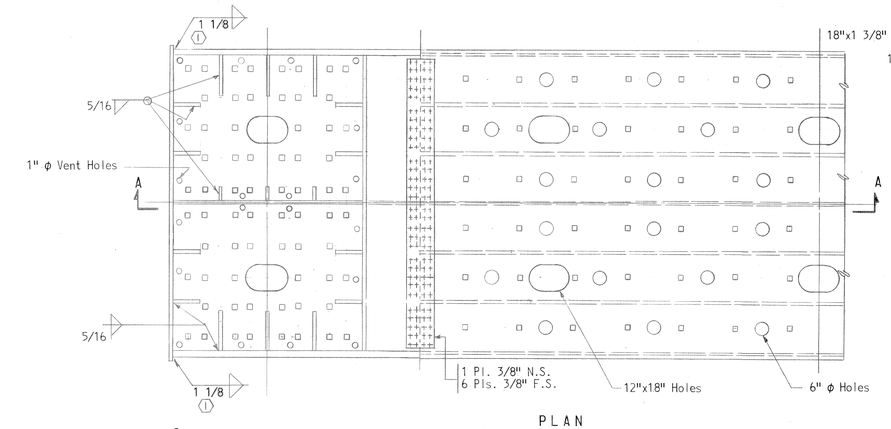

PLAN

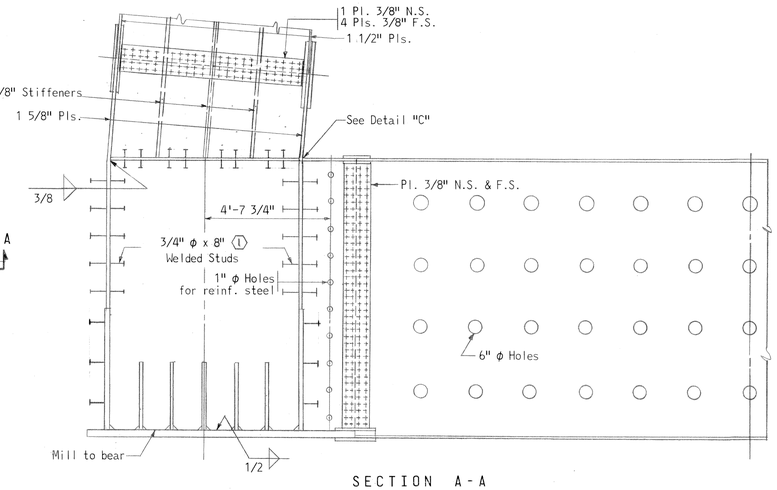

SECTION A-A

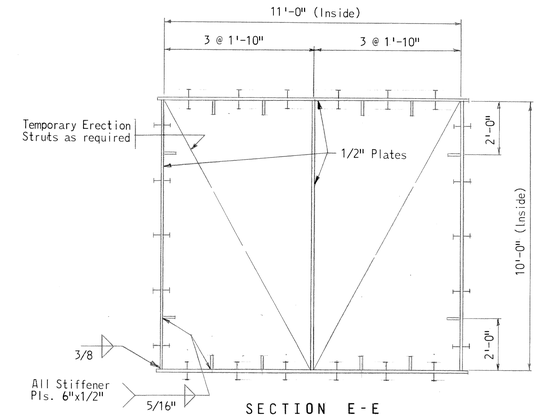

SECTION E-E

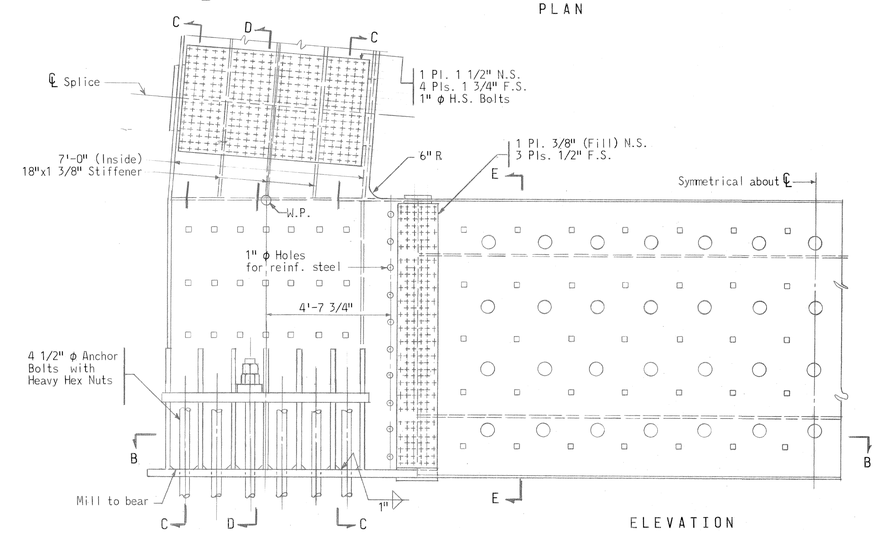

ELEVATION

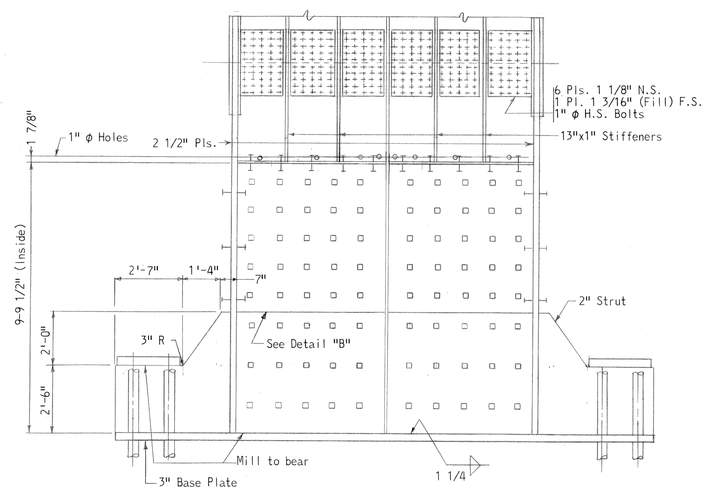

SECTION C-C

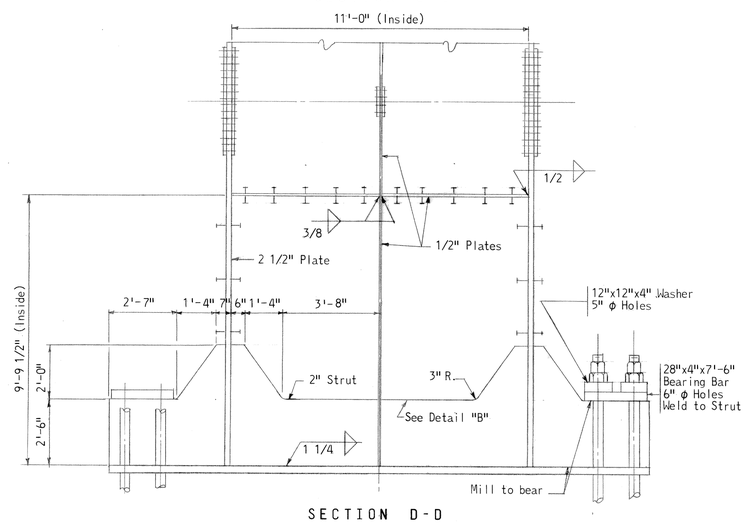

SECTION D-D

NOTE: All welded studs to be 3/4" φ x 3" except as noted.
Ⓘ

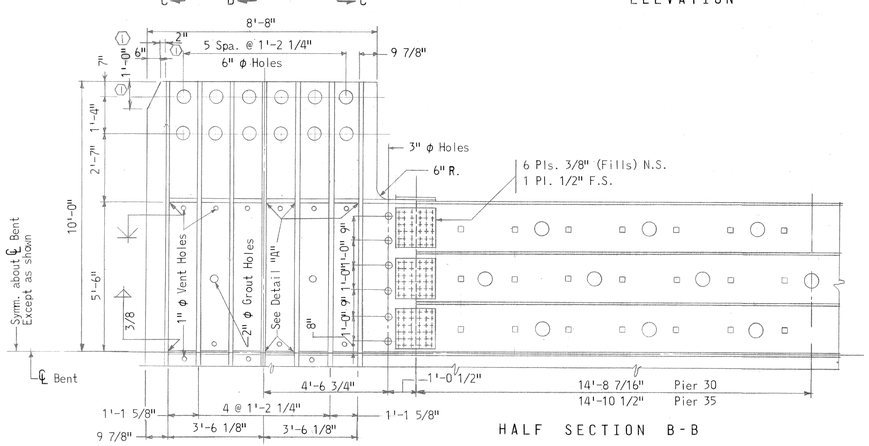

HALF SECTION B-B

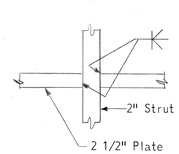

DETAIL "A"
No Scale

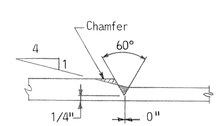

DETAIL "B"
No Scale

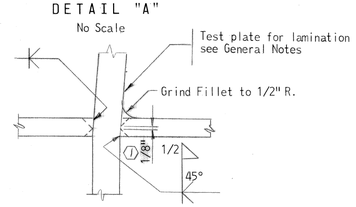

DETAIL "C"
No Scale

NOTES:

1. For General Notes See Sheet 7.
2. All bolts 7/8" φ H.S. Bolts unless otherwise noted.
3. Anchor bolts shall meet the requirements of ASTM A-307.

AS BUILT DRAWING

STATE OF MARYLAND
STATE ROADS COMMISSION
BALTIMORE, MD.
WM. PRESTON LANE, JR. MEMORIAL BRIDGE
SANDY POINT-KENT ISLAND

DETAILS AT BOTTOM STEEL BENTS 30 & 35

SCALE: 3/8" = 1'-0" & As Shown DATE: JULY, 1969 CONTRACT: PB 13-1

REVISIONS		
Ⓘ AS BUILT DWG. J.G.L. 10-25-74	J.E. GREINER COMPANY, INC. CONSULTING ENGINEERS BALTIMORE, MARYLAND	SHEET 45 OF 149

C-1100	MADE BY	CHECKED BY
DESIGN	EFC	CAB
DRAWING	EFC	EFC
TRACING	RM	RM
QUANTITIES	EFC	
IN CHARGE	C.E.M.	C.E.M.

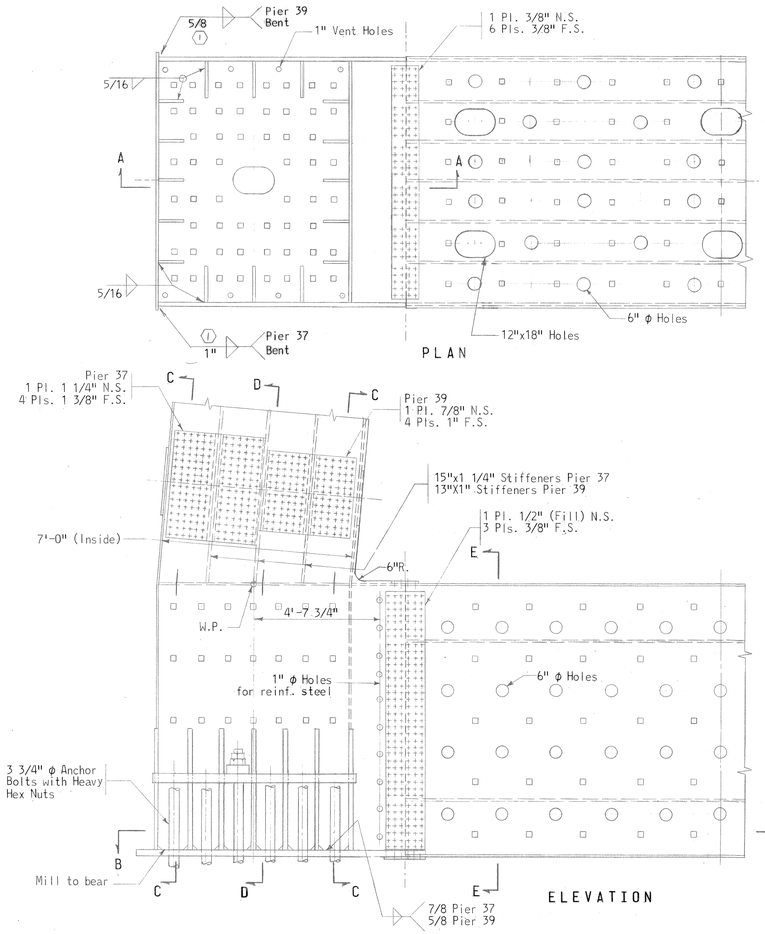

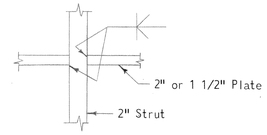

DETAIL "A"
No Scale

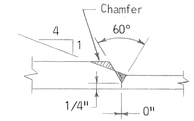

DETAIL "B"
No Scale

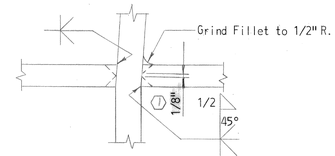

DETAIL "C"
No Scale

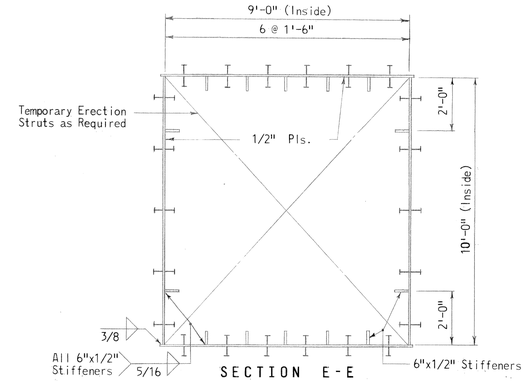

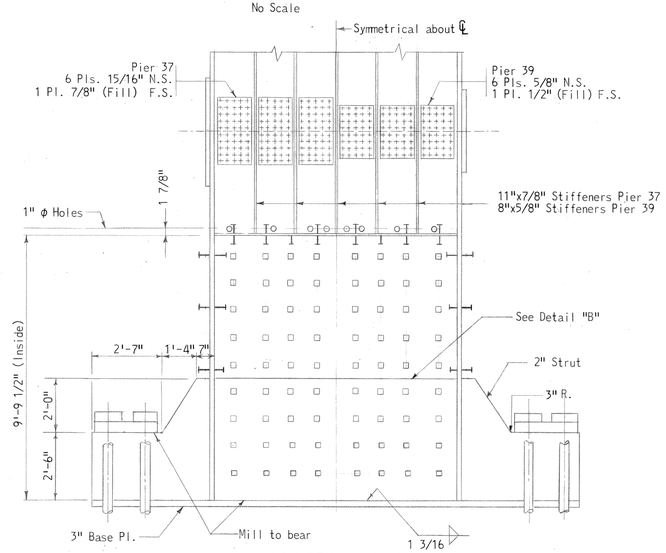

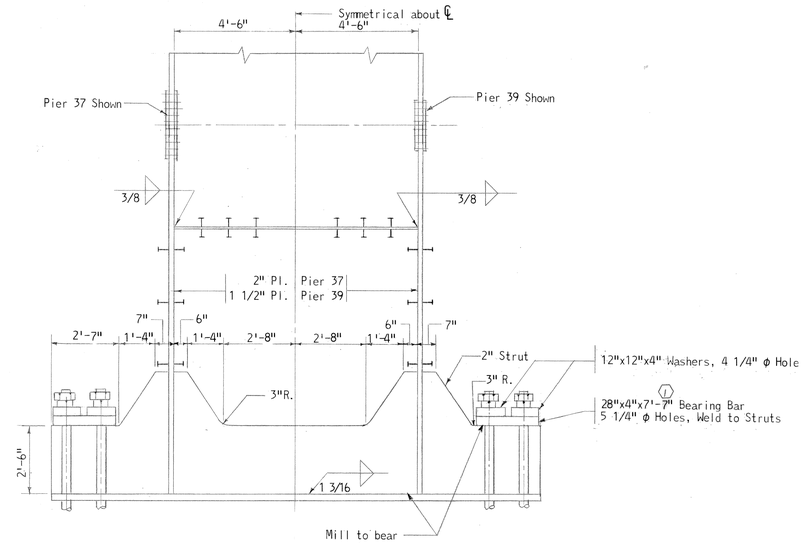

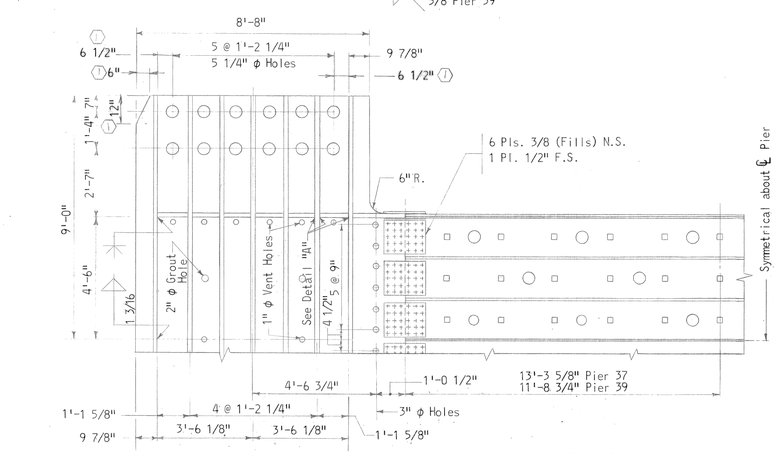

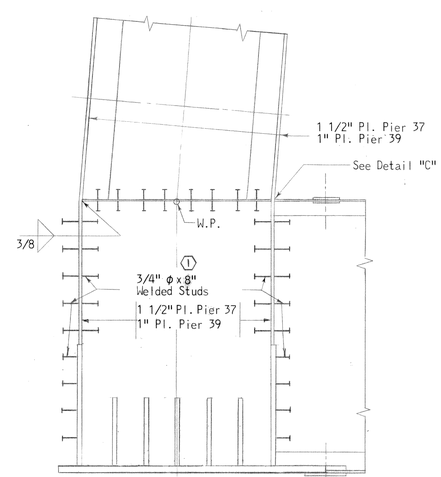

NOTE: All welded studs to be 3/4" ϕ x 3" except as noted. (1)

NOTES:

1. For General Notes see Sheet 7.
2. All bolts to be 7/8" ϕ H.S. Bolts unless otherwise noted.
3. Anchor bolts shall meet the requirements of ASTM A-307.

AS BUILT DRAWING

STATE OF MARYLAND
STATE ROADS COMMISSION
BALTIMORE, MD.
WM. PRESTON LANE, JR. MEMORIAL BRIDGE
SANDY POINT–KENT ISLAND

DETAILS AT BOTTOM STEEL BENTS 37 & 39

SCALE: 3/8"=1'-0" & As Shown DATE: JULY, 1969 CONTRACT: PB 13-1

(1) AS BUILT DWG. J.G.L. 10-25-74
REVISIONS

J. E. GREINER COMPANY, INC.
CONSULTING ENGINEERS
BALTIMORE, MARYLAND

SHEET 46 OF 149

	MADE BY	CHECKED BY
C- 1102		
DESIGN	EEC	GAB
DRAWING	EEC	EEC
TRACING	EEC	GAB
QUANTITIES	EEC	GAB
IN CHARGE	EEC	GAB

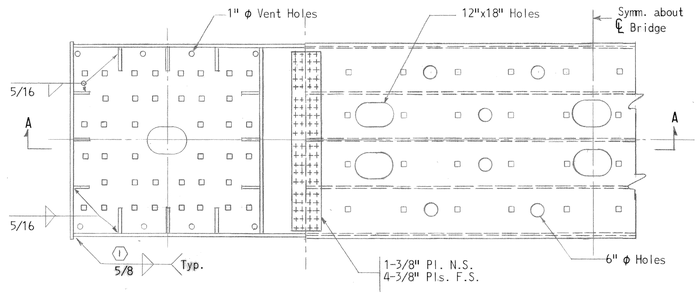

PLAN

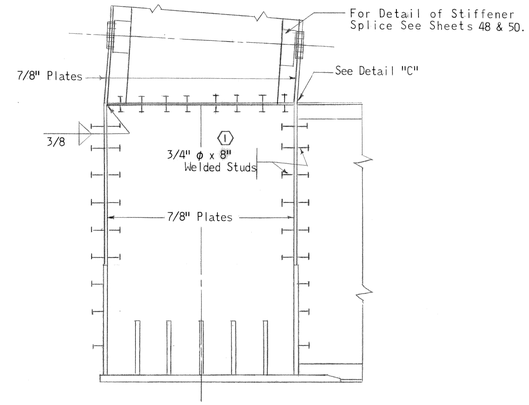

SECTION A-A

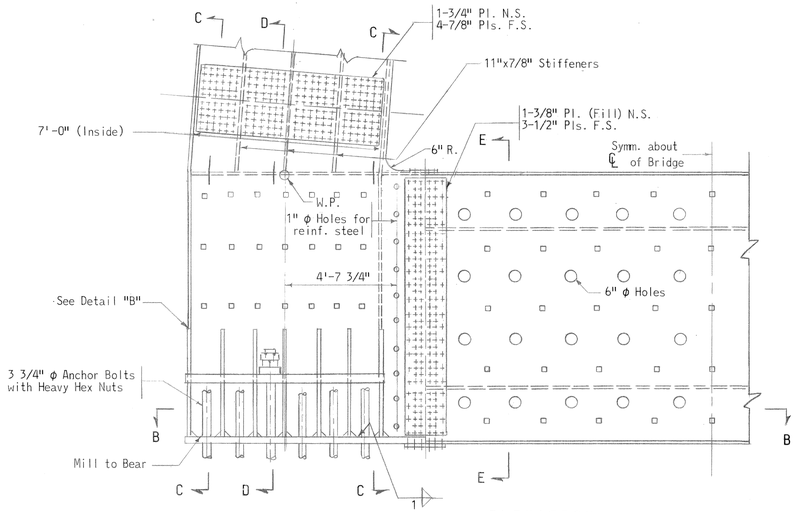

ELEVATION

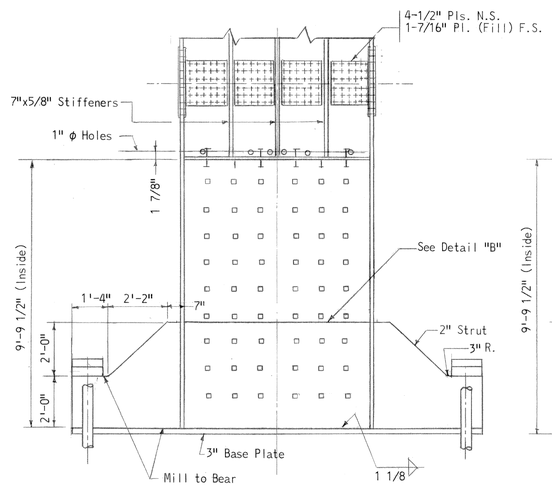

SECTION C-C

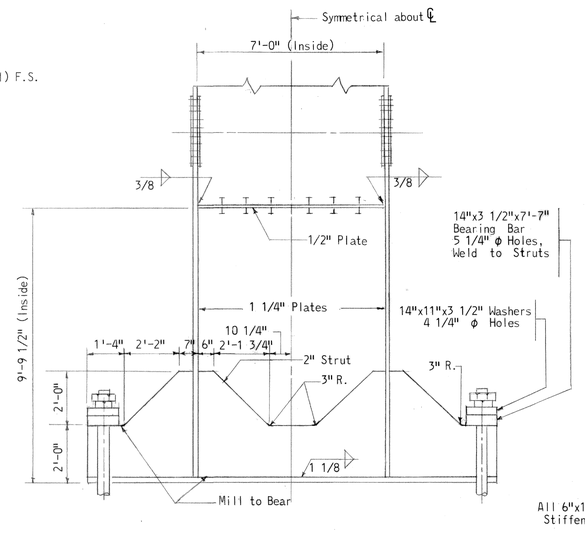

SECTION D-D

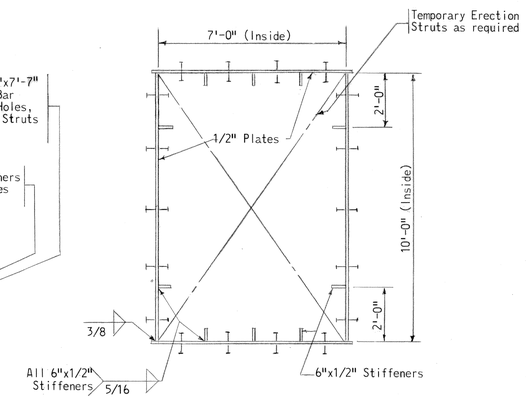

SECTION E-E

Note: All welded studs to be 3/4" φ x 3" except as noted. (1)

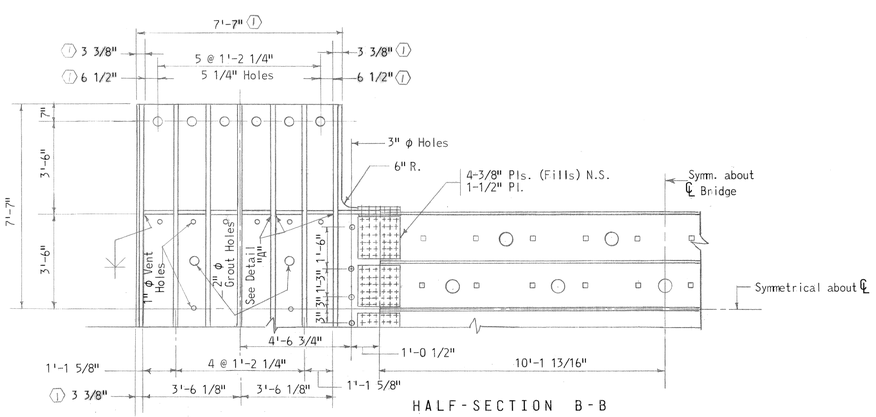

HALF-SECTION B-B

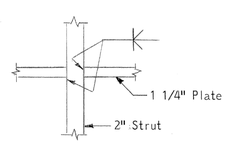

DETAIL "A"
No Scale

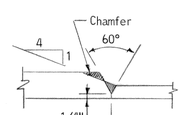

DETAIL "B"
No Scale

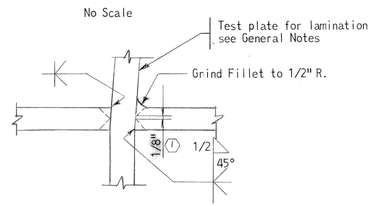

DETAIL "C"
No Scale

NOTES:

1. For General Notes See Sheet 7.
2. All bolts to be 7/8" φ H.S. Bolts unless otherwise noted.
3. Anchor bolts shall meet the requirements of ASTM A-307.

STATE OF MARYLAND
STATE ROADS COMMISSION
BALTIMORE, MD.
WM. PRESTON LANE, JR. MEMORIAL BRIDGE
SANDY POINT-KENT ISLAND

DETAILS AT BOTTOM STEEL BENT 41

SCALE: 3/8"=1'-0" & As Shown DATE: JULY, 1969 CONTRACT: PB 13-1

(1) AS BUILT DWG. J.G.L. 10-25-74
REVISIONS

J. E. GREINER COMPANY, INC.
CONSULTING ENGINEERS
BALTIMORE, MARYLAND

0011100	MADE BY	CHECKED BY
DESIGN	J.A.	P.S.T.
DRAWING	J.E.G.	C.R.
TRACING	J.E.G.	P.S.T.
QUANTITIES	P.S.T.	R.G.W.
IN CHARGE	C.B.M.	J.W.H.

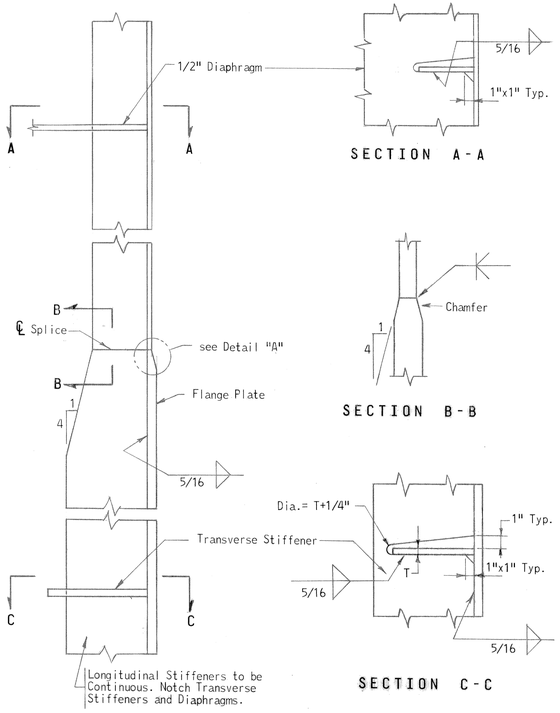

LONGITUDINAL STIFFENER DETAILS
No Scale

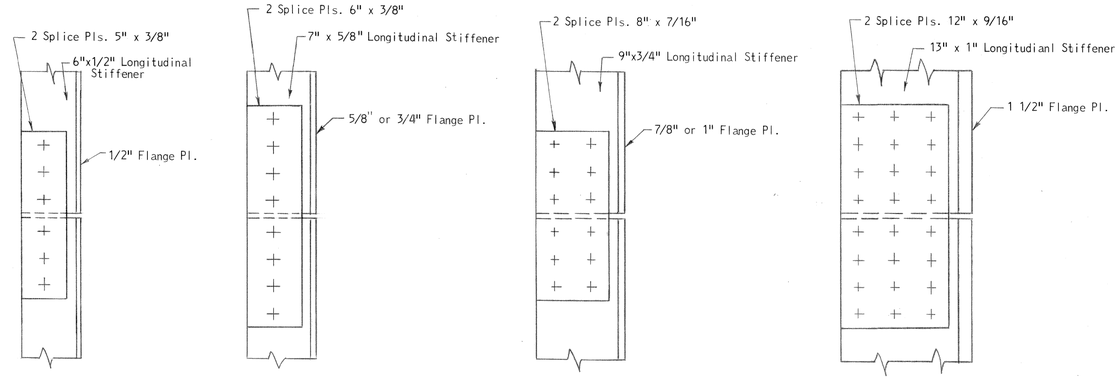

LONGITUDINAL STIFFENERS - FIELD SPLICES
Scale: 1 1/2" = 1'-0"

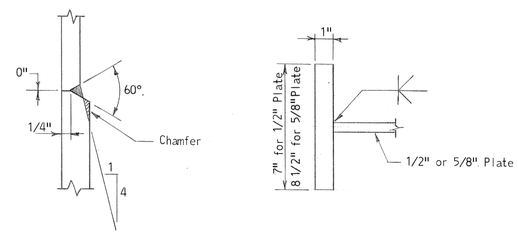

DETAIL "A"
No Scale

SECTION D-D
No Scale

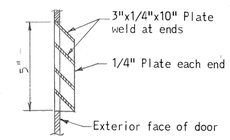

SECTION E-E
Scale: 3" = 1'-0"

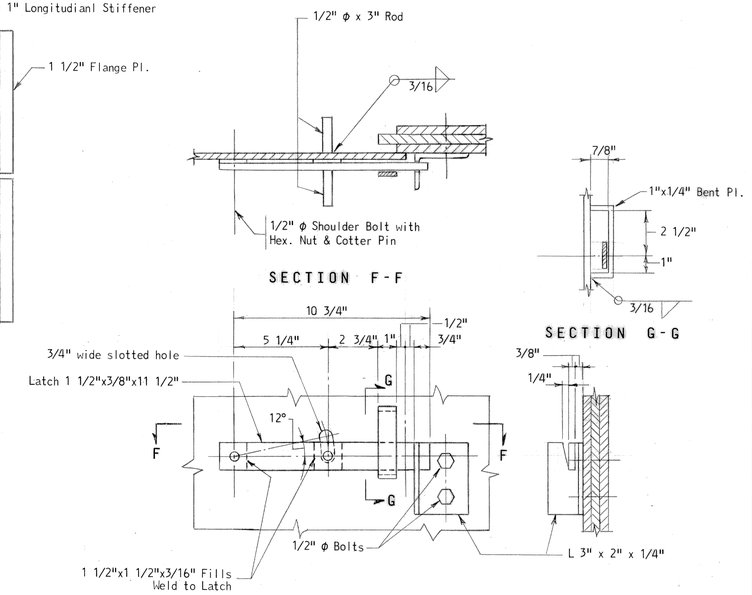

LATCH DETAILS
Scale: 3" = 1'-0"

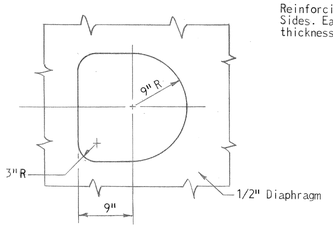

TYPE "A" OPENING

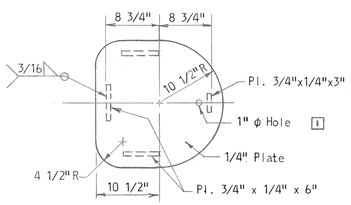

COVER FOR TYPE "A" OPENING

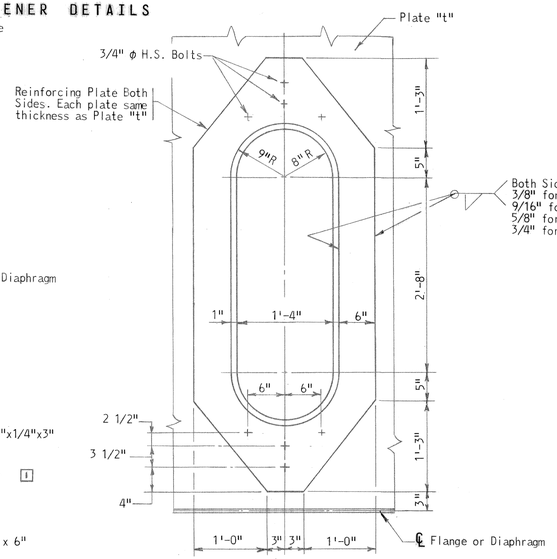

TYPE "B" OPENING

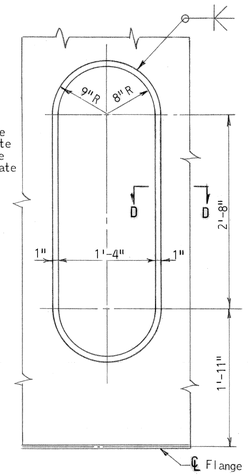

TYPE "C" OPENING

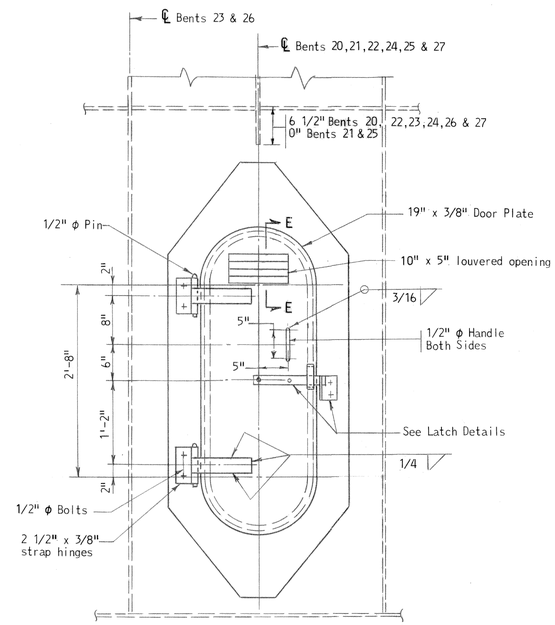

EXTERIOR DOOR FOR BENT LEGS

Note: For Details not shown see Type "B" Opening

NOTES:

1. For General Notes see Sheet 7.
2. All bolts to be 7/8" Φ H.S. Bolts unless otherwise noted.

AS BUILT DRAWING

STATE OF MARYLAND
STATE ROADS COMMISSION
BALTIMORE, MD.
WM. PRESTON LANE, JR. MEMORIAL BRIDGE
SANDY POINT-KENT ISLAND

MISCELLANEOUS DETAILS I
STEEL BENTS

SCALE: 1" = 1'-0" & As Shown DATE: JULY, 1969 CONTRACT: PB 12-1 & PB 13-1

1 S.J.S. 10/23/69
REVISIONS

J.E. GREINER COMPANY, INC.
CONSULTING ENGINEERS
BALTIMORE, MARYLAND

SHEET 48 OF 149

C-1100	MADE BY	CHECKED BY
DESIGN	C.R.	R.G.T.
DRAWING	T.G.	C.R.
TRACING	P.G.T.	R.G.W.
QUANTITIES	C.B.M. & J.W.H.	
IN CHARGE		

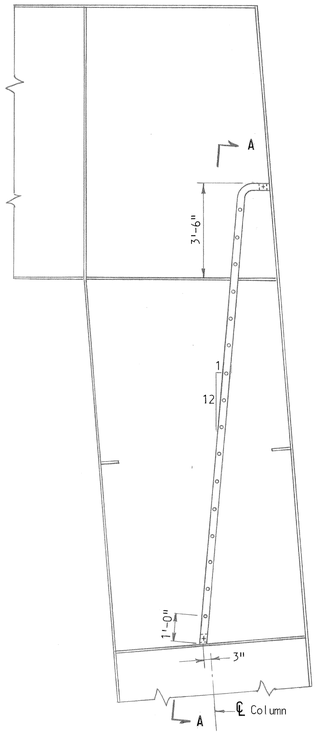

LADDER AT TOP OF LEG
Scale: 3/8" = 1'-0"

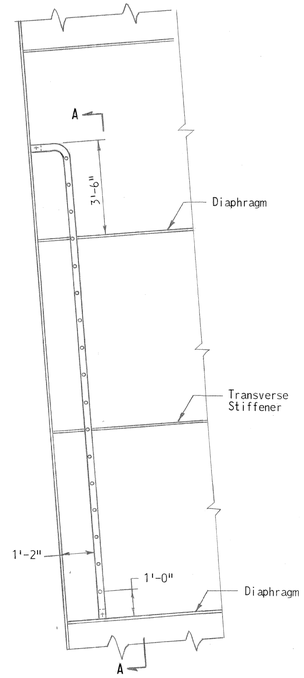

LADDER IN LEG - TYPICAL
Scale: 3/8" = 1'-0"

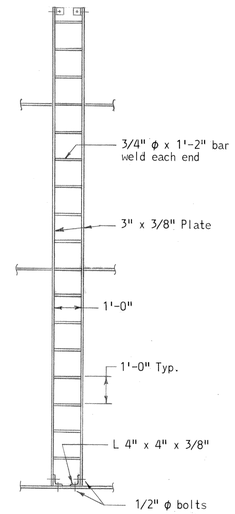

SECTION A-A
Scale: 3/8" = 1'-0"

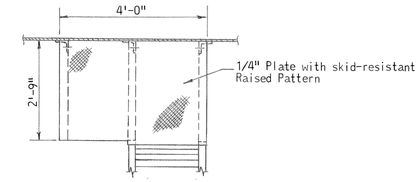

PLAN OF PLATFORM

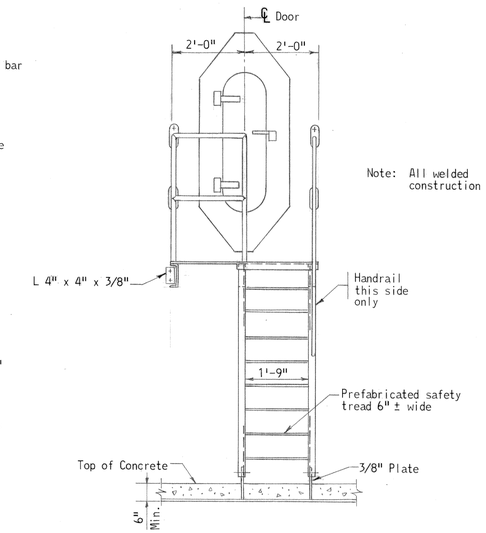

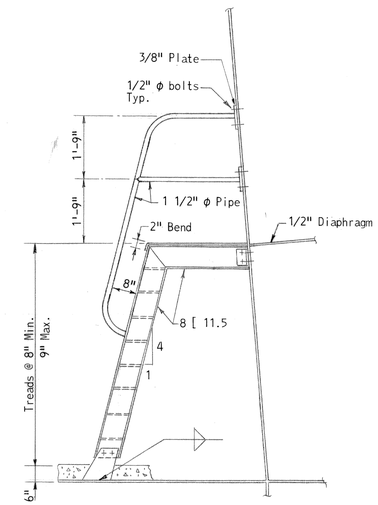

EXTERIOR LADDER DETAILS
Scale: 1/2" = 1'-0"

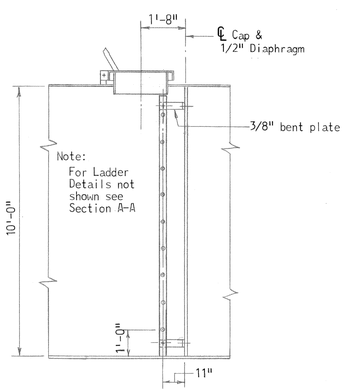

LADDER IN CAP
Scale: 3/8" = 1'-0"

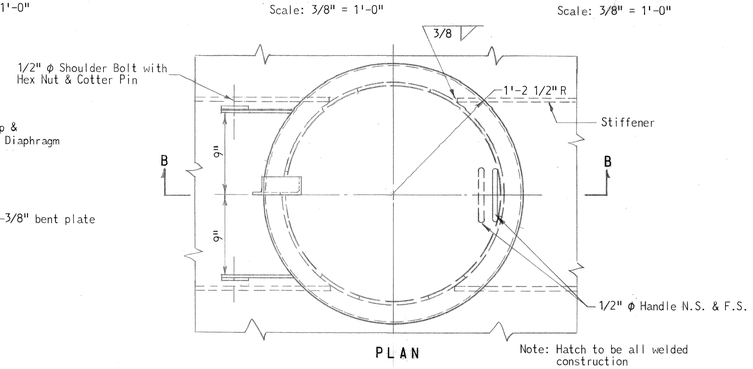

PLAN

Note: Hatch to be all welded construction

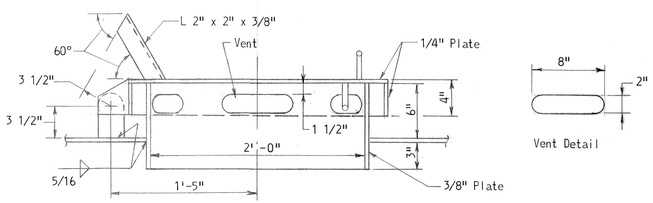

SECTION B-B
HATCH DETAILS
Scale: 1 1/2" = 1'-0"

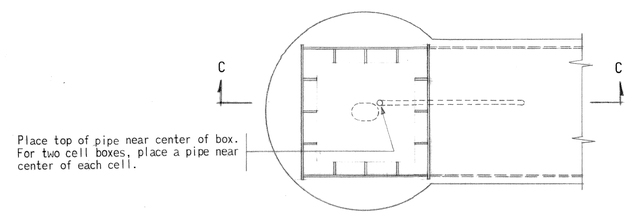

PLAN

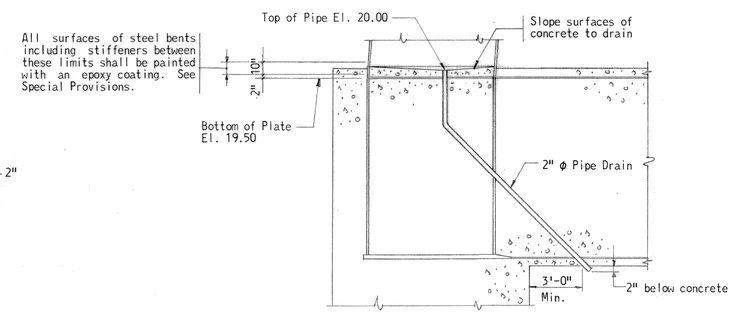

SECTION C-C
PIPE DRAIN & EPOXY COATING DETAILS
Scale: 1/4" = 1'-0"

NOTES:

1. For General Notes see Sheet 7.

AS BUILT DRAWING

STATE OF MARYLAND
STATE ROADS COMMISSION
BALTIMORE, MD.
WM. PRESTON LANE, JR. MEMORIAL BRIDGE
SANDY POINT-KENT ISLAND

MISCELLANEOUS DETAILS II
STEEL BENTS

SCALE: As Shown DATE: JULY, 1969 CONTRACT: PB 12-1 & PB 13-1

J.E. GREINER COMPANY, INC.
CONSULTING ENGINEERS
BALTIMORE, MARYLAND

SHEET 49 OF 149

REVISIONS

C-1100
DESIGN
DRAWING
TRACING
QUANTITIES
IN CHARGE
MADE BY EFC & GCB
CHECKED BY EFC & HMS
GCB BH
GCB BH
E.F.C. B.H.
C.B.M. & J.W.H.

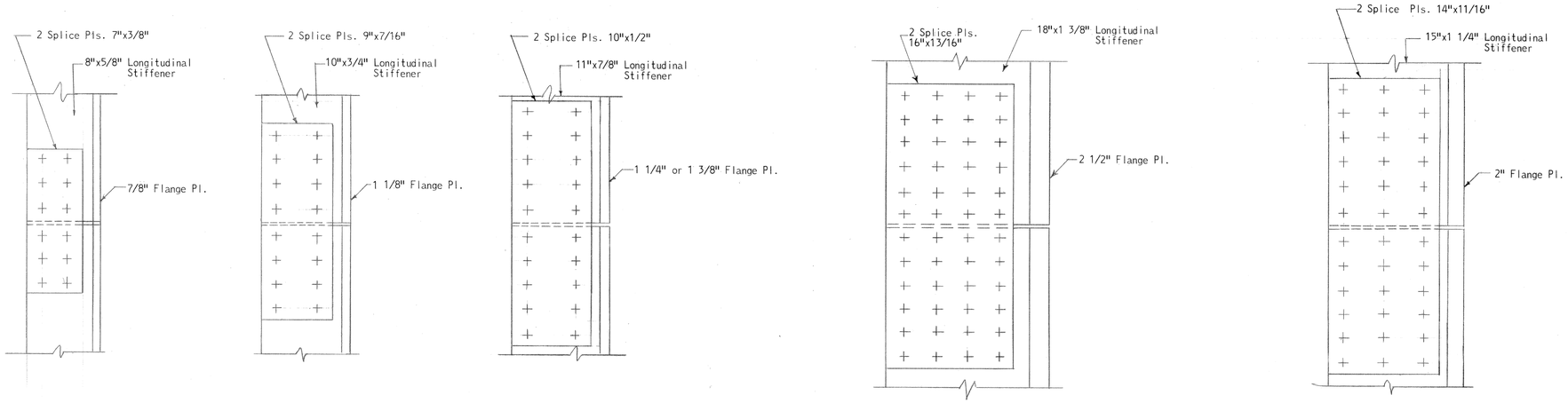

LONGITUDINAL STIFFENERS - FIELD SPLICES

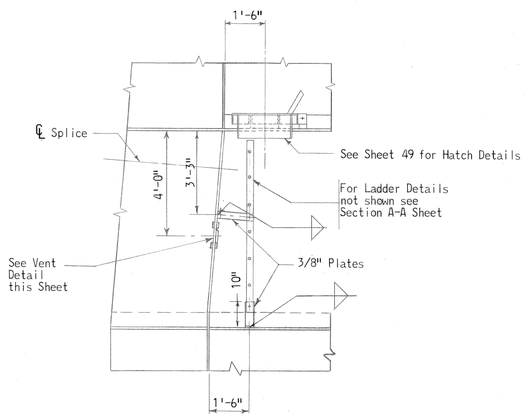

Note: Details shown are on one side of ℄ Bridge

ACCESS LADDER & HATCH
STEEL BENT 42
Scale: 3/8" = 1'-0"

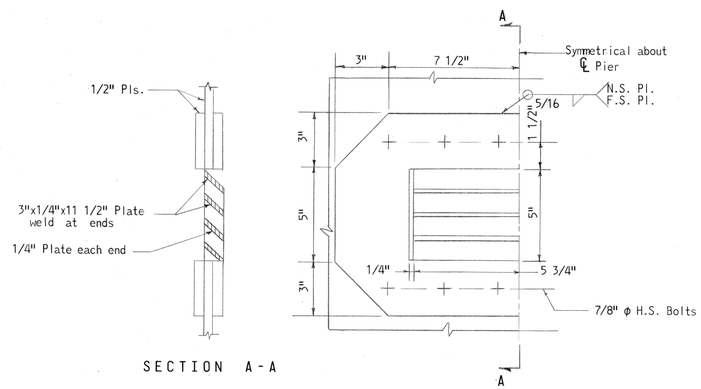

SECTION A-A

Note: Details shown are on both sides of ℄ Bridge

VENT DETAILS
STEEL BENT 42
Scale: 3" = 1'-0"

NOTES:
1. For General Notes see Sheet 7.

AS BUILT DRAWING

STATE OF MARYLAND
STATE ROADS COMMISSION
BALTIMORE, MD.
WM. PRESTON LANE, JR. MEMORIAL BRIDGE
SANDY POINT-KENT ISLAND
MISCELLANEOUS DETAILS III
STEEL BENTS

SCALE: 1 1/2"=1'-0" & As Shown DATE: JULY, 1969 CONTRACT: PB 12-1 & PB 13-1

J. E. GREINER COMPANY, INC.
CONSULTING ENGINEERS
BALTIMORE, MARYLAND

SHEET 50 OF 149

REVISIONS

C-1100	MADE BY	CHECKED BY
DESIGN	C.J.E.C.	R.L.S.
DRAWING	C.J.E.C.	R.L.S.
TRACING	C.E.S.	
QUANTITIES	C.B.M. & J.W.H.	
IN CHARGE		

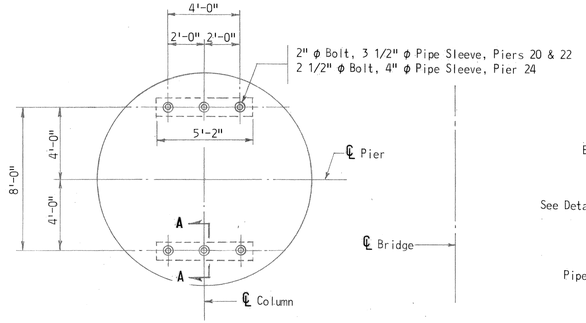

PLAN AT EL. +9.00
PIERS 20, 22 & 24

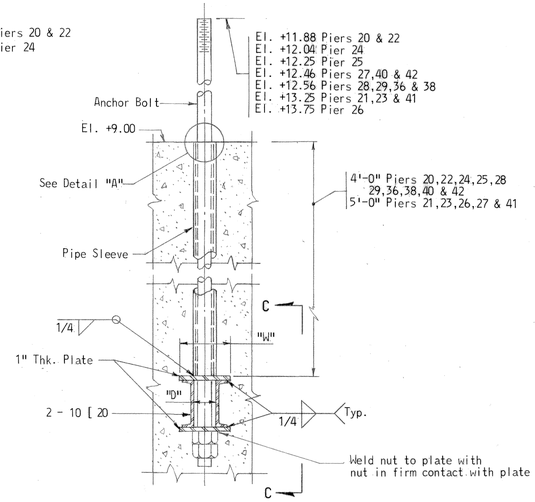

SECTION A-A
Scale: 3/4" = 1'-0"

ANCHOR BOLT ANCHORAGE DETAILS			
PIER NO.	DIMENSIONS		
	"D"	"L"	"W"
20, 22	4"	8"	10"
21, 23, 26, 41	5"	10"	11"
24, 25, 40, 42	4"	8"	10"
27, 28, 29, 36, 38	4 1/2"	8"	10 1/2"
30, 35	1'-9 1/2"	10"	2'-4"
37, 39	1'-8 1/2"	10"	2'-3"

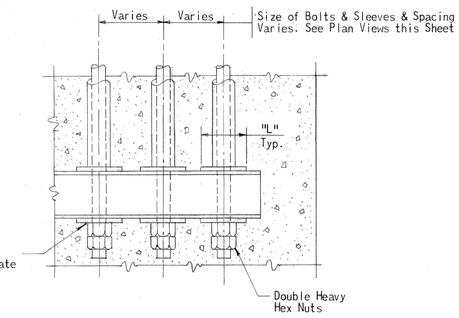

SECTION C-C
Scale: 3/4" = 1'-0"

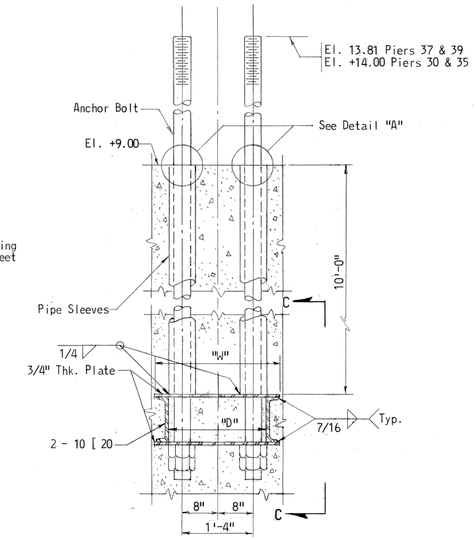

SECTION B-B
Scale: 3/4" = 1'-0"

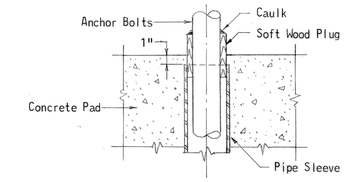

DETAIL "A"
Scale: 1 1/2" = 1'-0"

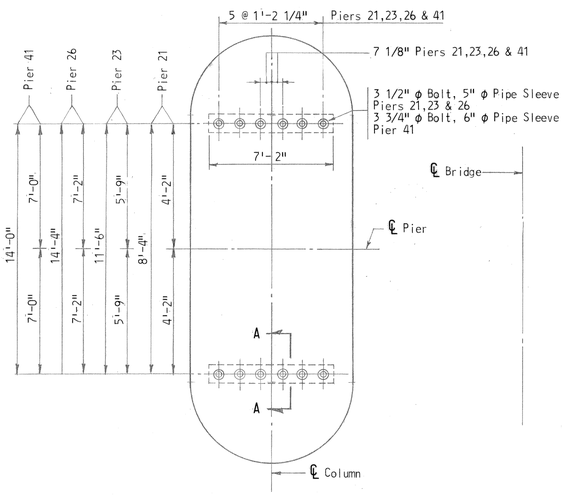

PLAN AT EL. +9.00
PIERS 21, 23, 26 & 41

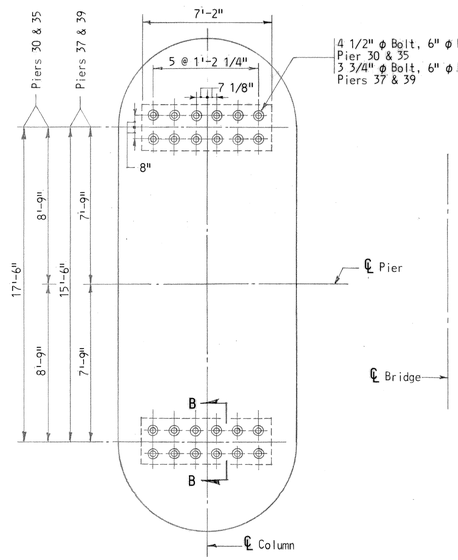

PLAN AT EL. +9.00
PIERS 30, 35, 37 & 39

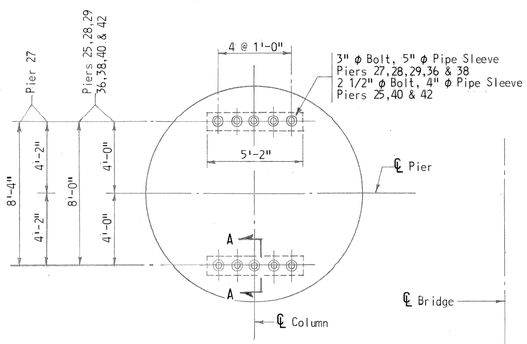

PLAN AT EL. +9.00
PIERS 25, 27, 28, 29, 36, 38, 40 & 42
Scale: 1/4" = 1'-0"

NOTES:

1. Anchor bolts and anchorages will be furnished by the superstructure contractor and placed under the substructure contracts. Care shall be taked to prevent water from freezing in open holes.
2. For General Notes see Sheet 7.
3. Anchor bolts shall meet the requirements of ASTM A-36. (1)

AS BUILT DRAWING

STATE OF MARYLAND
STATE ROADS COMMISSION
BALTIMORE, MD.
WM. PRESTON LANE, JR. MEMORIAL BRIDGE
SANDY POINT-KENT ISLAND
ANCHOR BOLT DETAILS
PIERS 20 thru 30 & 35 thru 42

SCALE: As Noted DATE: JULY, 1969 CONTRACT: PB 12-1 & PB 13-1

(1) AS BUILT DWG. J.G.L. 11-11-74
REVISIONS

J.E. GREINER COMPANY, INC.
CONSULTING ENGINEERS
BALTIMORE, MARYLAND

SHEET 51 OF 149