Maryland Transportation Authority

MA-2278-000-002

THOMAS J. HATEM, FRANCIS SCOTT KEY , HARRY W. NICE AND CHESAPEAKE BAY BRIDGES

ACCESS CONTROL FENCING AT MAJOR BRIDGES

HARFORD/ CECIL , BALTIMORE CITY/ BALTIMORE COUNTY, QUEEN ANNE'S AND CHALES COUNTY

STRUCTURE NOS. : CHZ30100, BCZ472, H-Z04000, AAZ05003 & AAZ05004

CONTRACT NO.: MA-2278-000-002

INDEX OF SHEETS

SHEET NO.	DWG. NO.	DESCRIPTION
1		TITLE SHEET
2	HB-01	WEST SHORE - PLAN AND ELEVATION
3	HB-02	EAST SHORE - PLAN AND ELEVATION
4	HB-03	FENCING PLAN
5	HB-04	MISCELLANEOUS DETAILS
6	FSK-01	WEST SHORE GENERAL PLAN AND ELEVATION
7	FSK-02	WEST ABUTMENT FENCING PLAN
8	NB-01	WEST SHORE PLAN AND ELEVATION
9	NB-02	EAST SHORE PLAN AND ELEVATION
10	NB-03	WEST ABUTMENT FENCING PLAN
11	NB-04	EAST ABUTMENT FENCING PLAN
12	NB-05	FENCING DETAILS
13	DE-01	FENCING DETAILS
14	ESF-01	GENERAL FENCING PLAN
15	ESF-02	WESTBOUND BRIDGE - FENCING PLAN AND ELEVATION
16	ESF-03	WESTBOUND BRIDGE - SHORE FENCING ELEVATION
17	ESF-04	WESTBOUND BRIDGE - BRIDGE FENCING DETAILS
18	ESF-05	EASTBOUND BRIDGE - FENCING PLAN & ELEVATION
19	ESF-06	EASTBOUND BRIDGE - FENCING ELEVATION
20	STD-01	STANDARD DRAWINGS I
21	STD-02	STANDARD DRAWINGS II

REFERENCE DRAWINGS :

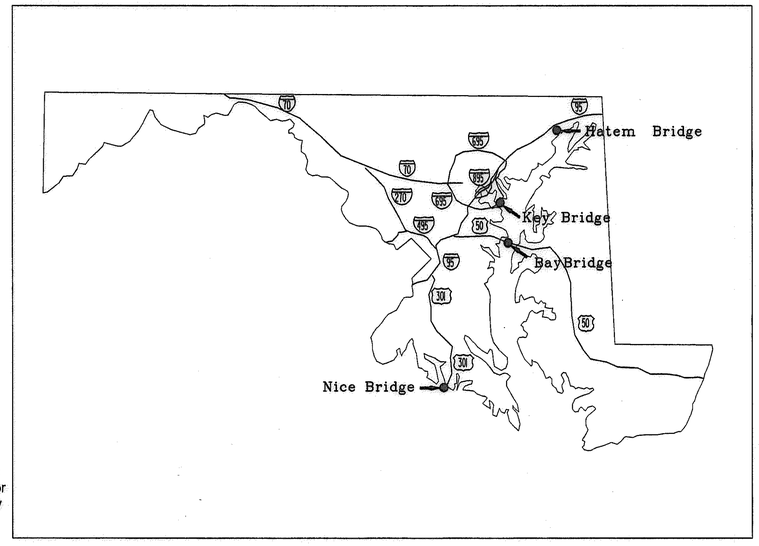

LOCATION MAP

STANDARDS AND SPECIFICATIONS

THIS PROJECT SHALL BE CONSTRUCTED IN ACCORDANCE WITH THE MARYLAND STATE HIGHWAY ADMINISTRATION'S "STANDARDS FOR HIGHWAY AND INCIDENTAL CONSTRUCTION", THE MARYLAND DEPARTMENT OF TRANSPORTATION STATE HIGHWAY ADMINISTRATION'S "STANDARD SPECIFICATIONS FOR CONSTRUCTION AND MATERIALS, JULY 2008" AND ALL REVISIONS THEREOF, THE LATEST MANUAL ON UNIFORM TRAFFIC CONTROL DEVICES(MUTCD) AND AS SPECIFIED IN THE CONTRACT DOCUMENTS.

COMPLETENESS OF DOCUMENTS

THE MARYLAND TRANSPORTATION AUTHORITY SHALL ONLY BE RESPONSIBLE FOR THE COMPLETENESS OF DOCUMENTS OBTAINED DIRECTLY FROM THE MARYLAND TRANSPORTATION AUTHORITY'S CASHIER'S OFFICE. FAILURE TO ATTACH ADDENDA MAY CAUSE THE BID TO BE IRREGULAR.

ADA COMPLIANCE

THE DESIGN OF THIS PROJECT HAS INCORPORATED FACILITIES IN COMPLIANCE WITH THE STATE AND FEDERAL LEGISLATION

RIGHT OF WAY

RIGHT OF WAY AND EASEMENT LINES SHOWN ON THESE PLANS ARE FOR ASSISTANCE IN INTERPRETING THE PLANS. THEY ARE NOT OFFICIAL. FOR OFFICIAL FEE RIGHT OF WAY AND EASEMENT INFORMATION, SEE APPROPRIATE RIGHT OF WAY PLATS.

UTILITIES

THE LOCATION OF UTILITIES SHOWN ON THE PLANS ARE FOR INFORMATION AND GUIDANCE ONLY. NO GUARANTEE IS MADE OF THE ACCURACY OF SAID LOCATIONS. NOTIFICATION TO "MISS UTILITY", 1.800.257.7777, SHALL BE GIVEN 48 HOURS (TWO FULL WORKING DAYS) IN ADVANCE OF WORKING IN THE AREA OF THE SPECIFIC AFFECTED UTILITY. THE NOTIFICATION TO "MISS UTILITY" IS REQUIRED WHENEVER ANY EXCAVATING OR SIMILAR WORK IS TO BE PERFORMED.

OWNERS / DEVELOPERS CERTIFICATION :

I / WE HEREBY CERTIFY THAT ALL CLEARING, GRADING, CONSTRUCTION AND/OR DEVELOPMENT WILL BE DONE PURSUANT TO THIS PLAN AND THAT ANY RESPONSIBLE PERSONNEL INVOLVED IN THE CONSTRUCTION PROJECT WILL HAVE A CERTIFICATE OF ATTENDANCE AT A MARYLAND DEPARTMENT OF THE ENVIRONMENT APPROVED TRAINING PROGRAM FOR THE CONTROL OF EROSION AND SEDIMENT BEFORE BEGINNING THE PROJECT. I HEREBY AUTHORIZE THE RIGHT OF ENTRY FOR PERIODIC ON-SITE EVALUATION BY STATE OF MARYLAND, DEPARTMENT OF THE ENVIRONMENT, COMPLIANCE INSPECTORS.

PRIME ENGINEERING & ARCHITECTURE, INC.
300 RED BROOK BLVD., SUITE 410
OWINGS MILLS, MARYLAND 21117
PH: (410) 654-3790; FAX (410) 654-3791-1954

STATE OF MARYLAND — TUDOR H. MANNER — No. 25196 — PROFESSIONAL ENGINEER

Professional Certification. I hereby certify that these documents were prepared or approved by me, and that I am a duty licensed professional engineer under the laws of the State of Maryland,
License No.: 25196
Expiration Date: 7/7/2011

MARYLAND TRANSPORTATION AUTHORITY

RECOMMENDED FOR APPROVAL	DIRECTOR, ENGINEERING DIVISION	6-3-10 DATE
APPROVED	CHIEF ENGINEER, OFFICE OF ENGINEERING AND CONSTRUCTION	6-3-10 DATE
APPROVED	EXECUTIVE SECRETARY	6/6/10 DATE

BY: ASUN

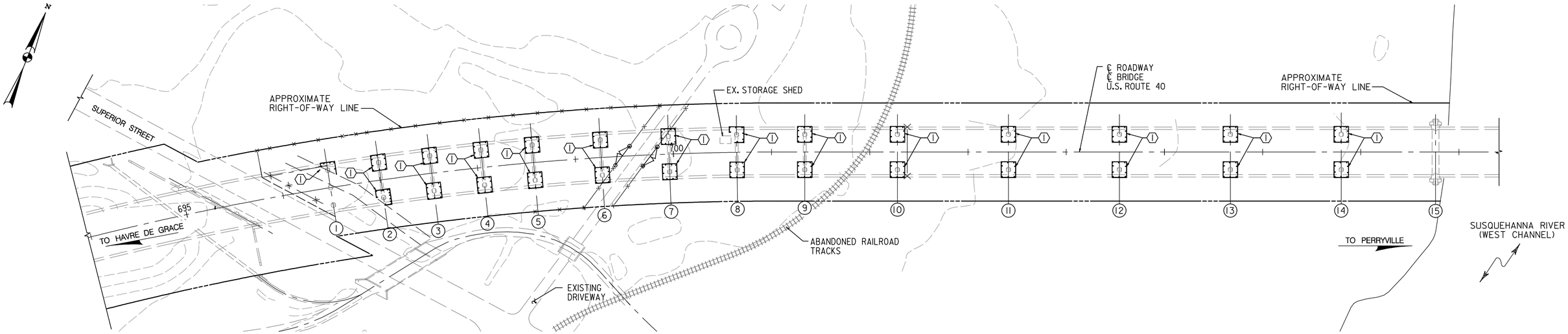

PLAN
SCALE: 1"=50'

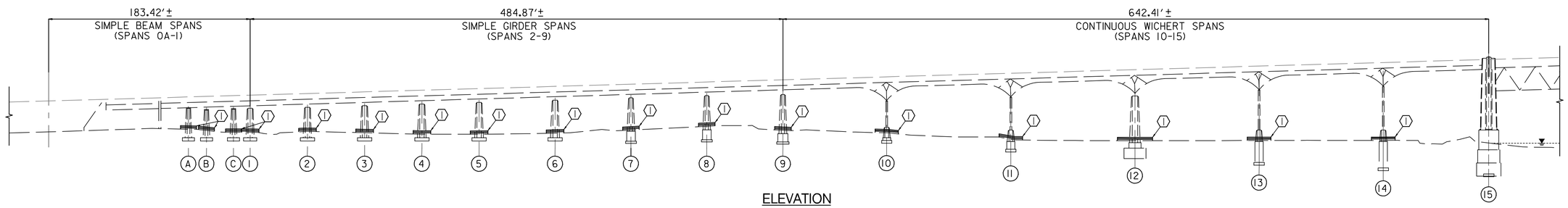

ELEVATION
SCALE: 1"=50'

GENERAL NOTES

SPECIFICATIONS: - SHA SPECIFICATIONS DATED JULY, 2008
- REVISIONS THEREOF AND ADDITIONS THERETO AND SPECIAL PROVISIONS FOR MATERIALS AND CONSTRUCTION.

AASHTO LRFD BRIDGE DESIGN SPECIFICATIONS DATED 2004 FOR DESIGN.

MATERIALS: ALL POSTS, BRACES, FITTINGS AND HARDWARE SHALL MEET THE REQUIREMENTS OF AASHTO M181. THEY SHALL BE ZINC-COATED STEEL EXCEPT CASTINGS FOR OTHER THAN ORNAMENTAL PURPOSES WHICH SHALL BE ZINC-COATED MALLEABLE IRON.

ALL PLATES SHALL BE STEEL CONFORMING TO ASTM DESIGNATION:A 36. ALL PARTS SHALL BE STEEL GALVANIZED UNLESS OTHERWISE NOTED AND ALL GALVANIZED SHALL BE DONE AFTER FABRICATION. PRECOATED LONGITUDINAL RAILS, IF CUT, WILL HAVE CUT END COATED WITH A ZINC-RICH PRIMER MEETING THE REQUIREMENTS OF FEDERAL SPECIFICATIONS TT-P-641 TYPE II, PRIOR TO ERECTION.

ALL DIMENSIONS AFFECTED BY THE GEOMETRICS, AND/OR LOCATION OF THE EXISTING STRUCTURE SHALL BE CHECKED IN THE FIELD BY THE CONTRACTOR BEFORE ANY CONSTRUCTION IS DONE, AND BEFORE ANY REINFORCING STEEL, ETC. IS ORDERED OR FABRICATED. THE MARKS SHOWN WITH DIMENSIONS AND STATIONS DO NOT INDICATE ANY DEGREE OF PRECISION. THESE MARKS (±) INDICATE EXISTING DIMENSIONS AND STATIONS THAT MAY VARY AND DO REQUIRE FIELD VERIFICATION BY THE CONTRACTOR.

EXISTING STRUCTURE: EXISTING STRUCTURE SHOWN IN LONG DASHED LINES.

BOLTS: ALL STAINLESS STEEL BOLTS SHALL CONFORM TO ASTM DESIGNATION A-193 TYPE 304.

ALL STAINLESS STEEL NUTS SHALL CONFORM TO ASTM DESIGNATION A-276 TYPE 304.

LOCKS: LOCKS SHALL BE KEYED ACCORDING TO INSTRUCTIONS FROM MdTA MAINTENANCE PERSONNEL.

WORK REQUIRED LEGEND:

1. INSTALL W BEAM TRAFFIC BARRIER TO PROTECT BASE OF PIER. PROVIDE 6' CLEAR DISTANCE.
2. INSTALL NEW SECURITY GATE 12' WIDE.
3. INSTALL NEW SECURITY FENCE WITH BARBED WIRE ENCLOSING PORTIONS OF THE EAST APPROACH.

NOTES:

1. SHORE SECURITY FENCE FABRIC SHALL BE RIVERDALE 1/2" x 3" x 10.5 GAUGE ANTI-CUT WIRE MESH, GALVANIZED AND PVC COATED, WIREWALL HIGH SECURITY FENCING OR APPROVED EQUAL.

PRIME
ENGINEERING & ARCHITECTURE, INC.
3106 LORD BALTIMORE DRIVE, SUITE 106
BALTIMORE, MARYLAND 21244
PH: (410) 265-1956; FAX (410) 265-1954

PROFESSIONAL CERTIFICATION

"I HEREBY CERTIFY THAT THESE DOCUMENTS WERE PREPARED OR APPROVED BY ME, AND THAT I AM A DULY LICENSED PROFESSIONAL ENGINEER UNDER THE LAWS OF THE STATE OF MARYLAND, LICENSE NO. 25196 EXPIRATION DATE: 07-07-2011."

STATE OF MARYLAND · RICHARD H. MANUEL · No. 25196 · PROFESSIONAL ENGINEER

MARYLAND TRANSPORTATION AUTHORITY
Engineering Division

ADDENDUMS & REVISIONS			
NO.	DESCRIPTION	BY	DATE

ACCESS CONTROL FENCING AT MAJOR BRIDGES

THOMAS J. HATEM MEMORIAL BRIDGE
HARFORD COUNTY AND CECIL COUNTY

WEST SHORE - PLAN & ELEVATION

DESIGNED BY RHM	DRAWN BY JLH	CHECKED BY	
CONST. REVIEW BY	DATE DEC 2008	SCALE AS NOTED	

CONTRACT NO. MA-2278-000-002
DRAWING NO. HB-01
SHEET NO. 2 OF 21

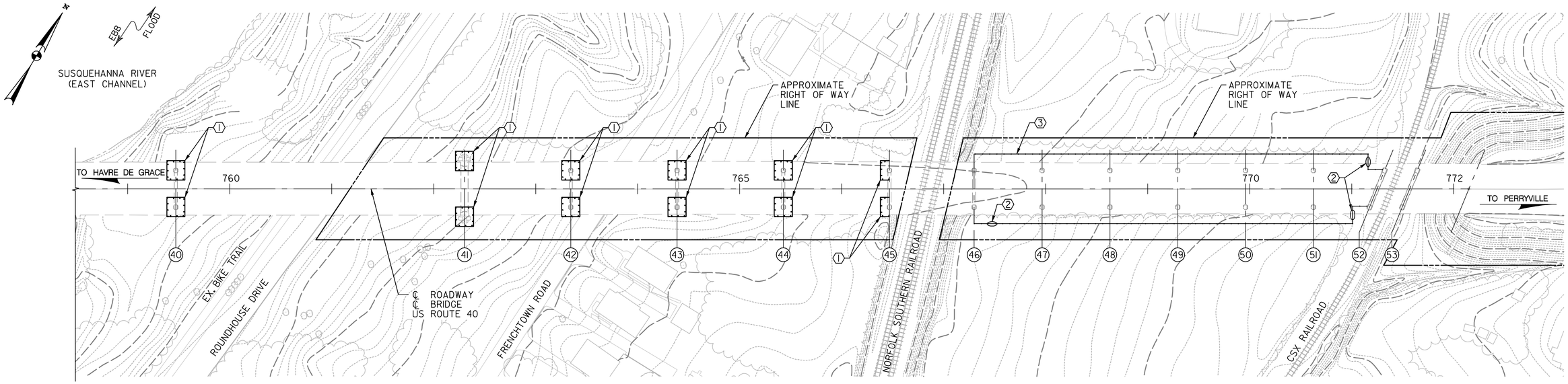

PLAN
SCALE: 1"=50'

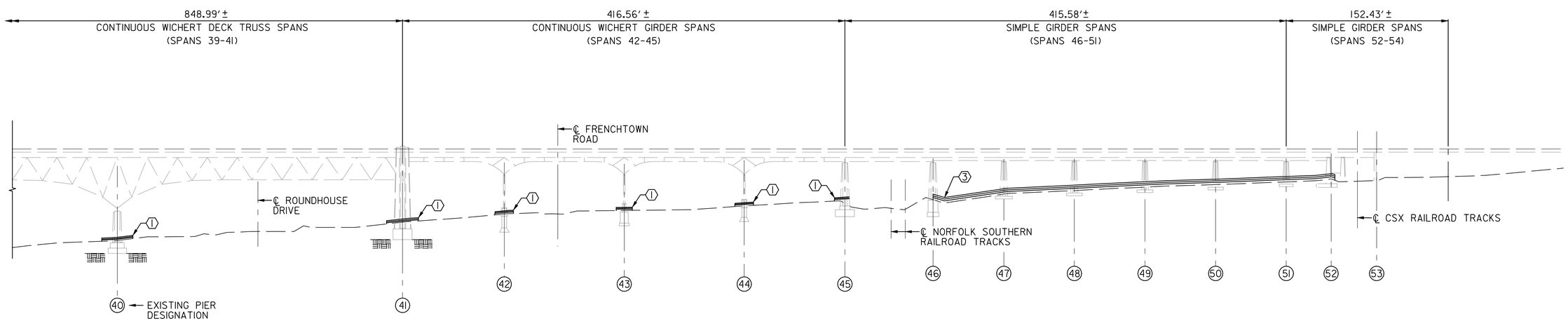

ELEVATION
SCALE: 1"=50'

NOTES:

1. SEE SHEET HB-01 FOR WORK REQUIRED LEGEND.

PRIME
ENGINEERING & ARCHITECTURE, INC.
3106 LORD BALTIMORE DRIVE, SUITE 106
BALTIMORE, MARYLAND 21244
PH: (410) 265-1956; FAX (410) 265-1954

PROFESSIONAL CERTIFICATION

"I HEREBY CERTIFY THAT THESE DOCUMENTS WERE PREPARED OR APPROVED BY ME, AND THAT I AM A DULY LICENSED PROFESSIONAL ENGINEER UNDER THE LAWS OF THE STATE OF MARYLAND, LICENSE NO. 25196 EXPIRATION DATE: 07-07-2011."

STATE OF MARYLAND · RICHARD J. MANUEL · No. 25196 · PROFESSIONAL ENGINEER

MARYLAND TRANSPORTATION AUTHORITY
Engineering Division

ADDENDUMS & REVISIONS			
NO.	DESCRIPTION	BY	DATE

ACCESS CONTROL FENCING AT MAJOR BRIDGES

THOMAS J. HATEM MEMORIAL BRIDGE
HARFORD COUNTY AND CECIL COUNTY

EAST SHORE - PLAN & ELEVATION

DESIGNED BY RHM	DRAWN BY JLH	CHECKED BY
CONST. REVIEW BY	DATE DEC 2008	SCALE AS NOTED

CONTRACT NO. MA-2278-000-002
DRAWING NO. HB-02
SHEET NO. 3 OF 21

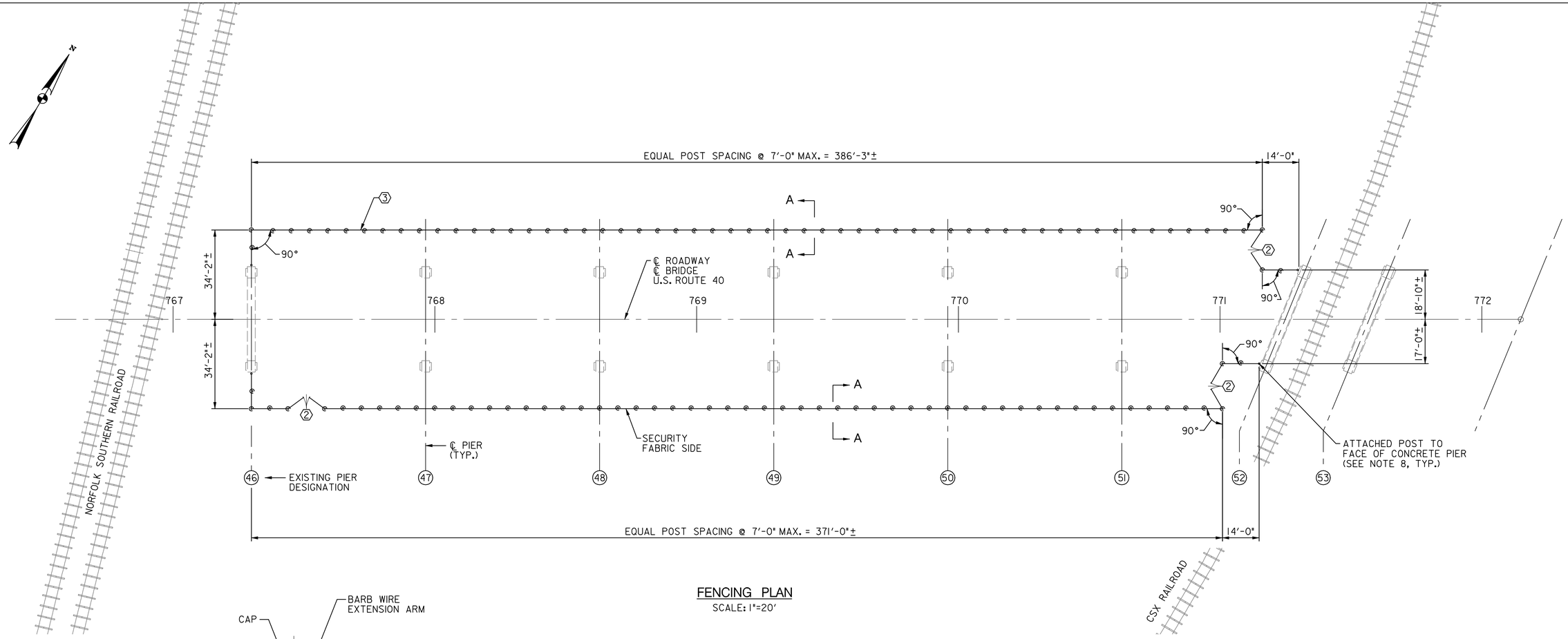

FENCING PLAN

SCALE: 1"=20'

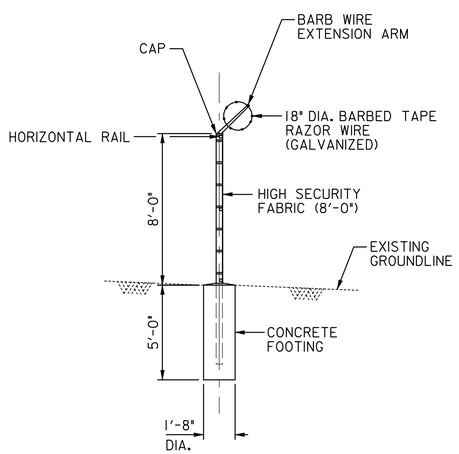

SECTION A–A

SCALE: 1/4"=1'-0"

NOTES:

1. SEE SHEET HB-01 FOR WORK REQUIRED LEGEND.
2. TEMPORARY CHAIN LINK FENCE SHALL BE REMOVED IN ITS ENTIRETY.
3. THE CONTRACTOR SHALL FIELD VERIFY ALL POSTS SPACING PRIOR TO FABRICATION AND ORDERING OF MATERIALS.
4. ALL STRUCTURAL STEEL (FENCE POSTS, HORIZONTAL STRUTS) SHALL BE GALVANIZED.
5. FENCE POSTS SHALL BE 3.5" O.D. EXTRA STRONG PIPE WEIGHING 10.25 LB/FT, HIGH STRENGTH GRADE (83 ksi).
6. ALL HORIZONTAL STRUTS SHALL BE 2.375" O.D. EXTRA STRONG PIPE WEIGHING 5.02 LB/FT. REGULAR GRADE (30 ksi).
7. MAXIMUM FENCE POST SPACING IS 7'-0" C/C POSTS.
8. FOR FENCE POST ATTACHMENT TO CONCRETE BRIDGE PIER DETAILS, SEE STD. MD 690.21.

PRIME
ENGINEERING & ARCHITECTURE, INC.
3106 LORD BALTIMORE DRIVE, SUITE 106
BALTIMORE, MARYLAND 21244
PH: (410) 265-1956; FAX (410) 265-1954

PROFESSIONAL CERTIFICATION

"I HEREBY CERTIFY THAT THESE DOCUMENTS WERE PREPARED OR APPROVED BY ME, AND THAT I AM A DULY LICENSED PROFESSIONAL ENGINEER UNDER THE LAWS OF THE STATE OF MARYLAND, LICENSE NO. 25196 EXPIRATION DATE: 07-07-2011."

STATE OF MARYLAND · POEL A. MANUEL · No. 25196 · PROFESSIONAL ENGINEER

MARYLAND TRANSPORTATION AUTHORITY

Engineering Division

ADDENDUMS & REVISIONS

NO.	DESCRIPTION	BY	DATE

ACCESS CONTROL FENCING AT MAJOR BRIDGES

THOMAS J. HATEM MEMORIAL BRIDGE
HARFORD COUNTY AND CECIL COUNTY

FENCING PLAN

DESIGNED BY RHM	DRAWN BY	CHECKED BY
CONST. REVIEW BY	DATE DEC 2008	SCALE AS NOTED

CONTRACT NO. MA-2278-000-002

DRAWING NO. HB-03

SHEET NO. 4 OF 21

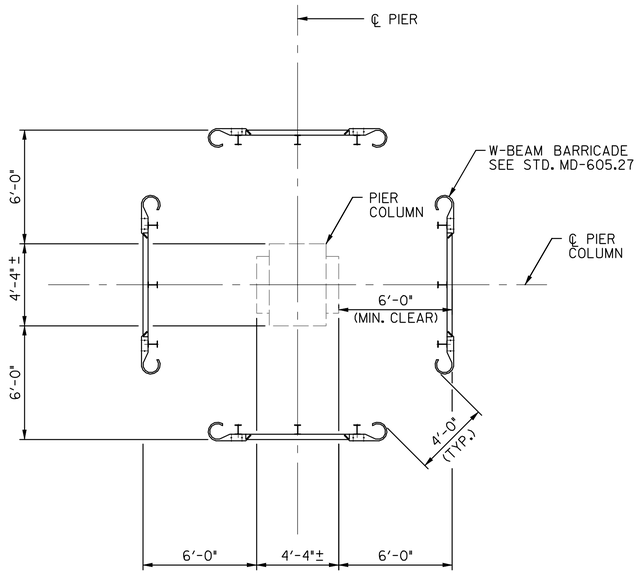

PLAN
(W-BEAM BARRICADE DETAILS)

PRIME
ENGINEERING & ARCHITECTURE, INC.
3106 LORD BALTIMORE DRIVE, SUITE 106
BALTIMORE, MARYLAND 21244
PH: (410) 265-1956; FAX (410) 265-1954

PROFESSIONAL CERTIFICATION

"I HEREBY CERTIFY THAT THESE DOCUMENTS WERE PREPARED OR APPROVED BY ME, AND THAT I AM A DULY LICENSED PROFESSIONAL ENGINEER UNDER THE LAWS OF THE STATE OF MARYLAND, LICENSE NO. 25196 EXPIRATION DATE: 07-07-2011."

STATE OF MARYLAND
R. H. MANUEL
No. 25196
PROFESSIONAL ENGINEER

MARYLAND TRANSPORTATION AUTHORITY
Engineering Division

ADDENDUMS & REVISIONS

NO.	DESCRIPTION	BY	DATE

ACCESS CONTROL FENCING AT MAJOR BRIDGES
THOMAS J. HATEM MEMORIAL BRIDGE
HARFORD COUNTY AND CECIL COUNTY

MISCELLANEOUS DETAILS

DESIGNED BY RHM | DRAWN BY RHM | CHECKED BY
CONST. REVIEW BY | DATE DEC 2008 | SCALE AS NOTED

CONTRACT NO. MA-2278-000-002
DRAWING NO. HB-04
SHEET NO. 5 OF 21

WORK REQUIRED LEGEND:

1. INSTALL NEW SECURITY FENCE WITH BARBED WIRE TO TIE EXISTING FENCE LINES UNDER THE WEST APPROACH. NEW FENCE SHALL FOLLOW EXISTING CHAIN LINK FENCE ALIGNMENT. EXISTING CHAIN LINK FENCE TO BE REMOVED.
2. INSTALL NEW SECURITY GATES (24'-0" WIDE).
3. INSTALL NEW CHAIN LINK FENCE ON TOP OF WEST ABUTMENT PARAPETS (NORTH AND SOUTH). INSTALL ANTI-CLIMB SHIELDS AT THE TERMINUSES. REFER TO BRIDGE STD. NO. BR-SS(3.03)-75-21/23 FOR CHAIN LINK SAFETY FENCE DETAILS AND BR-SS(3.05)-75-25 FOR ANTI-CLIMB SHIELD DETAILS.

NOTES:

1. SHORE SECURITY FENCE FABRIC (INCLUDING THAT FOR GATES) SHALL BE RIVERDALE 1/2"x3" x 10 1/2 GAUGE, ANTI-CUT WIRE MESH GALVANIZED AND PVC COATED, WIREWALL HIGH SECURITY FENCING OR APPROVED EQUAL.
2. THE SPAN BETWEEN EXISTING AND PROPOSED FENCE POST SHALL BE LESS THAN OR EQUAL TO THE EXISTING CHAIN LINK FENCE POST SPACING. THE EXISTING CHAIN LINK FENCE FABRIC SHALL BE IN GOOD CONDITION AS DETERMINED BY THE ENGINEER. CHAIN LINK FENCE FABRIC DEEMED TO BE IN POOR CONDITION SHALL BE REPLACED. THE LIMIT OR REPLACEMENT WILL BE LIMITED TO THE IMMEDIATE THREE FENCE POST SPACING. THE REATTACHED CHAIN LINK FABRIC SHALL BE TAUT AND IS SUBJECT TO THE PERFORMANCE REQUIREMENTS OF THE SPECIFICATIONS.

GENERAL NOTES

SPECIFICATIONS: - SHA SPECIFICATIONS DATED JANUARY, 2001
- REVISIONS THEREOF AND ADDITIONS THERETO AND SPECIAL PROVISIONS FOR MATERIALS AND CONSTRUCTION.

AASHTO STANDARD SPECIFICATIONS FOR HIGHWAY BRIDGES DATED 2002 FOR DESIGN.

MATERIALS: ALL POSTS, BRACES, FITTINGS AND HARDWARE SHALL MEET THE REQUIREMENTS OF AASHTO M181. THEY SHALL BE ZINC-COATED STEEL EXCEPT CASTINGS FOR OTHER THAN ORNAMENTAL PURPOSES WHICH SHALL BE ZINC-COATED MALLEABLE IRON.

ALL PLATES SHALL BE STEEL CONFORMING TO ASTM DESIGNATION:A 36. ALL PARTS SHALL BE STEEL GALVANIZED UNLESS OTHERWISE NOTED AND ALL GALVANIZED SHALL BE DONE AFTER FABRICATION. PRECOATED LONGITUDINAL RAILS, IF CUT, WILL HAVE CUT END COATED WITH A ZINC-RICH PRIMER MEETING THE REQUIREMENTS OF FEDERAL SPECIFICATIONS TT-P-641 TYPE II, PRIOR TO ERECTION.

EXISTING STRUCTURE: ALL DIMENSIONS AFFECTED BY THE GEOMETRICS, AND/OR LOCATION OF THE EXISTING STRUCTURE SHALL BE CHECKED IN THE FIELD BY THE CONTRACTOR BEFORE ANY CONSTRUCTION IS DONE, AND BEFORE ANY REINFORCING STEEL, ETC. IS ORDERED OR FABRICATED. THE ± MARKS SHOWN WITH DIMENSIONS AND STATIONS DO NOT INDICATE ANY DEGREE OF PRECISION. THESE MARKS (±) INDICATE EXISTING DIMENSIONS AND STATIONS THAT MAY VARY AND DO REQUIRE FIELD VERIFICATION BY THE CONTRACTOR.

EXISTING STRUCTURE SHOWN IN LONG DASHED LINES.

BOLTS: ALL STAINLESS STEEL BOLTS SHALL CONFORM TO ASTM DESIGNATION A-193 TYPE 304.

ALL STAINLESS STEEL NUTS SHALL CONFORM TO ASTM DESIGNATION A-276 TYPE 304.

LOCKS: LOCKS SHALL BE KEYED ACCORDING TO INSTRUCTIONS FROM MdTA MAINTENANCE PERSONNEL.

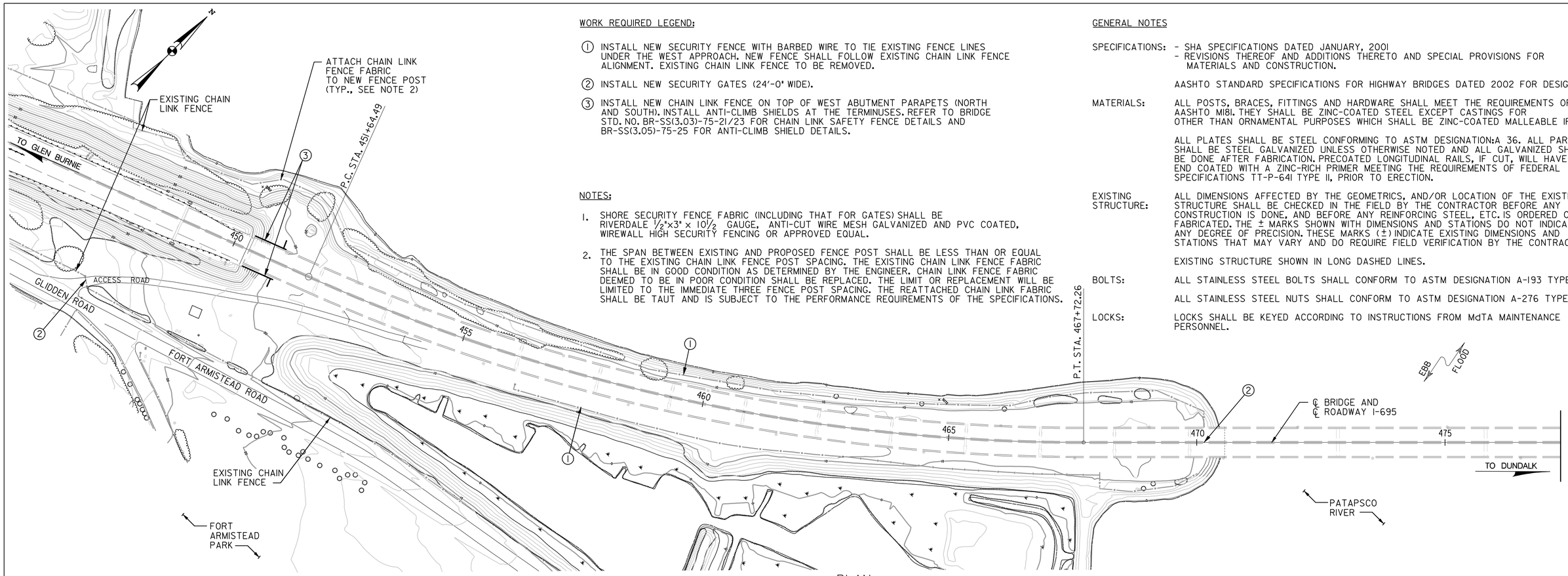

PLAN
SCALE: 1"=100'

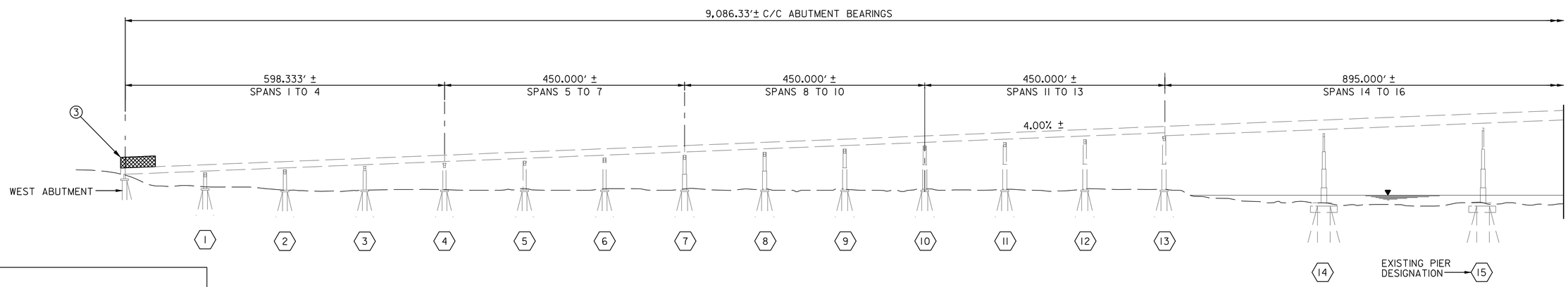

NOTE:

PROPOSED SHORE FENCING NOT SHOWN IN THE ELEVATION VIEW FOR CLARITY.

ELEVATION
SCALE: 1"=100'

PRIME ENGINEERING & ARCHITECTURE, INC.
3106 LORD BALTIMORE DRIVE, SUITE 106
BALTIMORE, MARYLAND 21244
PH: (410) 265-1956; FAX (410) 265-1954

PROFESSIONAL CERTIFICATION

"I HEREBY CERTIFY THAT THESE DOCUMENTS WERE PREPARED OR APPROVED BY ME, AND THAT I AM A DULY LICENSED PROFESSIONAL ENGINEER UNDER THE LAWS OF THE STATE OF MARYLAND, LICENSE NO. 25196 EXPIRATION DATE: 07-07-2011."

STATE OF MARYLAND · BELA M. MANJIT · No. 25196 · PROFESSIONAL ENGINEER

MARYLAND TRANSPORTATION AUTHORITY
Engineering Division

ADDENDUMS & REVISIONS			
NO.	DESCRIPTION	BY	DATE

ACCESS CONTROL FENCING AT MAJOR BRIDGES
FRANCIS SCOTT KEY MEMORIAL BRIDGE
BALTIMORE CITY, BALTIMORE COUNTY AND ANNE ARUNDEL COUNTY

WEST SHORE - GENERAL PLAN AND ELEVATION

DESIGNED BY RHM | DRAWN BY JLH | CHECKED BY
CONST. REVIEW BY | DATE DEC 2008 | SCALE AS NOTED

CONTRACT NO. MA-2278-000-002
DRAWING NO. FSK-01
SHEET NO. 6 OF 21

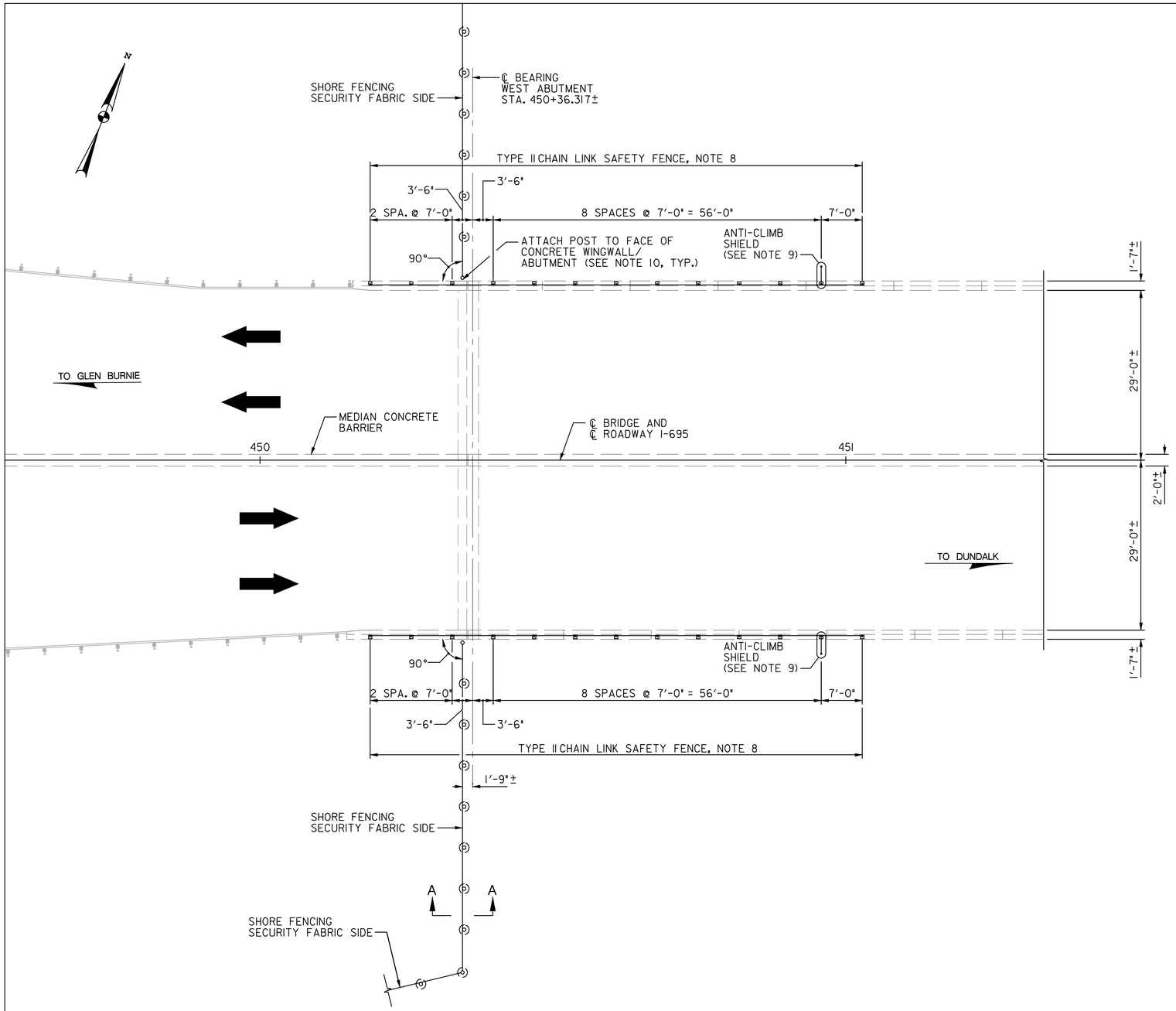

WEST ABUTMENT PLAN
SCALE: 1"=10'

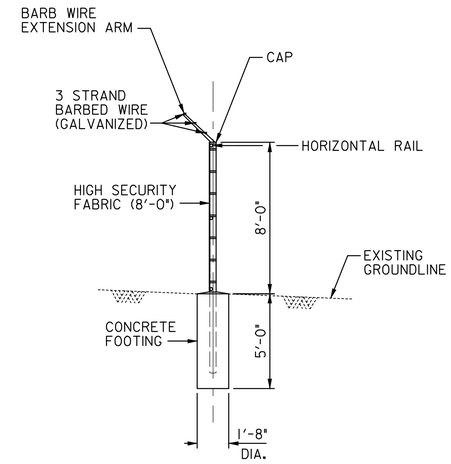

SECTION A–A
SCALE: 1/4"=1'-0"

NOTES:

1. ALL UNDERGROUND UTILITIES SHOWN ON THESE PLANS ARE SCHEMATIC ONLY AND MAY NOT BE COMPLETE. THE CONTRACTOR SHALL BE RESPONSIBLE FOR NOTIFYING MISS UTILITY PRIOR TO CONSTRUCTION SO THAT ALL UTILITIES MAY BE LOCATED IN THE FIELD.
2. THE CONTRACTOR SHALL PROVIDE THE NECESSARY PROTECTION AND NOT DAMAGE THE SAID UTILITIES. ALL UTILITIES ARE TO REMAIN UNDISTURBED AND IN-PLACE.
3. THE CONTRATOR MAY ADJUST SHORE FENCE POST SPACING PROVIDED THE OVERALL SPACING IS RELATIVELY UNIFORM AND DOES NOT EXCEED 7'-0" CENTER-TO-CENTER OF POST.
4. THE CONTRACTOR SHALL FIELD VERIFY ALL POSTS SPACING PRIOR TO FABRICATION AND ORDERING OF MATERIALS.
5. ALL STRUCTURAL STEEL (FENCE POSTS, HORIZONTAL STRUTS) SHALL BE GALVANIZED.
6. FENCE POSTS SHALL BE 3.5" O.D. EXTRA STRONG PIPE WEIGHING 10.25 LB/FT, HIGH STRENGTH GRADE (83 ksi).
7. ALL HORIZONTAL STRUTS SHALL BE 2.375" O.D. EXTRA STRONG PIPE WEIGHING 5.02 LB/FT. REGULAR GRADE (30 ksi).
8. FOR TYPE II CHAIN LINK SAFETY FENCE DETAILS SEE MD STD. NO. BR-SS(3.01)-75-21 AND BR-SS(3.03)-75-23.
9. FOR ANTI-CLIMB SHIELD DETAILS, SEE MD STD. NO. BR-SS(3.05)-75-25.
10. FOR FENCE POST ATTACHMENT TO CONCRETE BRIDGE DETAILS, SEE STD. MD 690.21.

PRIME
ENGINEERING & ARCHITECTURE, INC.
3106 LORD BALTIMORE DRIVE, SUITE 106
BALTIMORE, MARYLAND 21244
PH: (410) 265-1956; FAX (410) 265-1954

PROFESSIONAL CERTIFICATION

"I HEREBY CERTIFY THAT THESE DOCUMENTS WERE PREPARED OR APPROVED BY ME, AND THAT I AM A DULY LICENSED PROFESSIONAL ENGINEER UNDER THE LAWS OF THE STATE OF MARYLAND, LICENSE NO. 25196 EXPIRATION DATE: 07-07-2011."

STATE OF MARYLAND
RICHARD H. MANUEL
No. 25196
PROFESSIONAL ENGINEER

MARYLAND TRANSPORTATION AUTHORITY
Engineering Division

ADDENDUMS & REVISIONS

NO.	DESCRIPTION	BY	DATE

ACCESS CONTROL FENCING AT MAJOR BRIDGES

FRANCIS SCOTT KEY MEMORIAL BRIDGE
BALTIMORE CITY, BALTIMORE COUNTY AND ANNE ARUNDEL COUNTY

WEST ABUTMENT FENCING PLAN

DESIGNED BY RHM	DRAWN BY RHM	CHECKED BY	
CONST. REVIEW BY	DATE DEC 2008	SCALE AS NOTED	

CONTRACT NO. MA-2278-000-002
DRAWING NO. FSK-02
SHEET NO. 7 OF 21

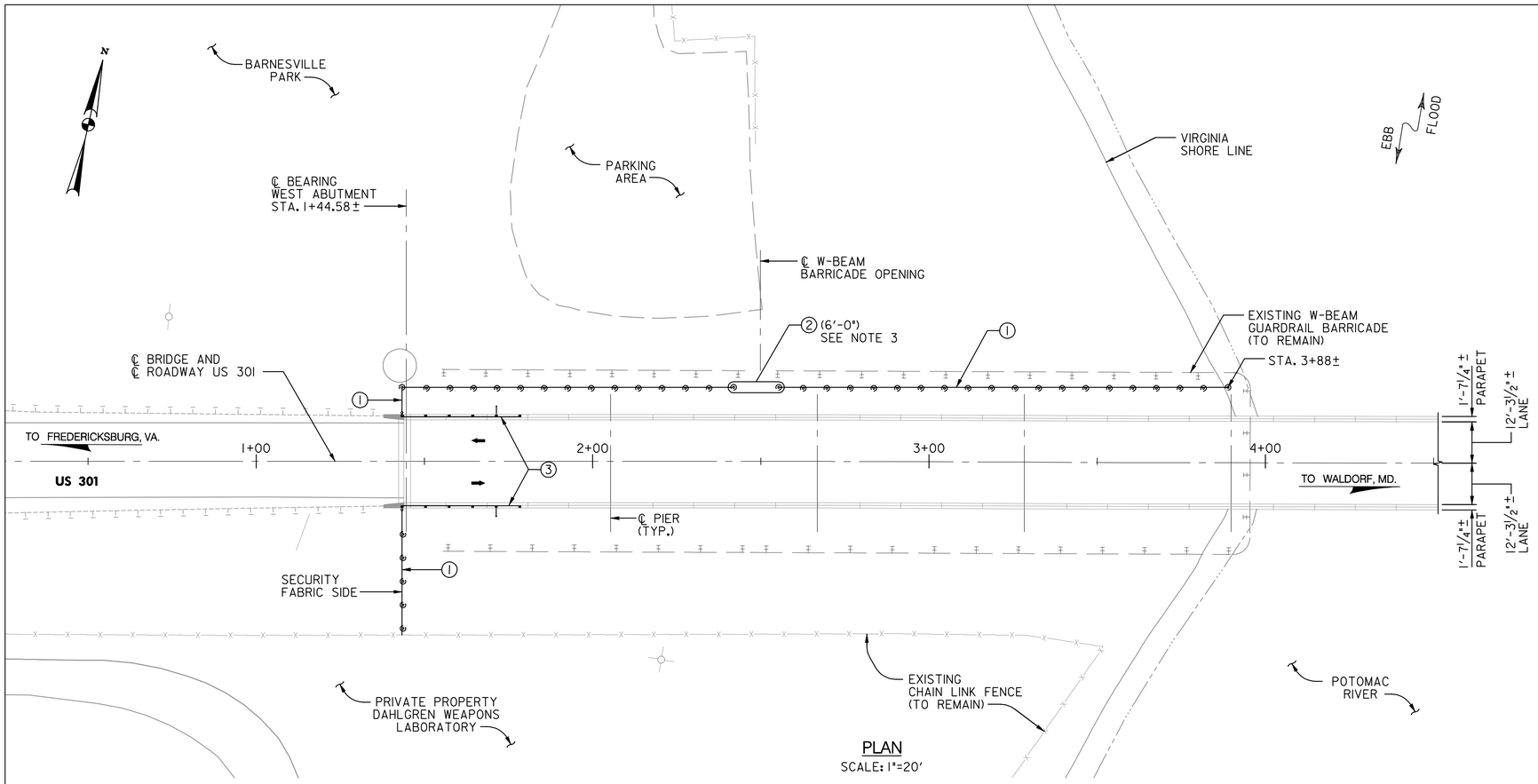

PLAN
SCALE: 1"=20'

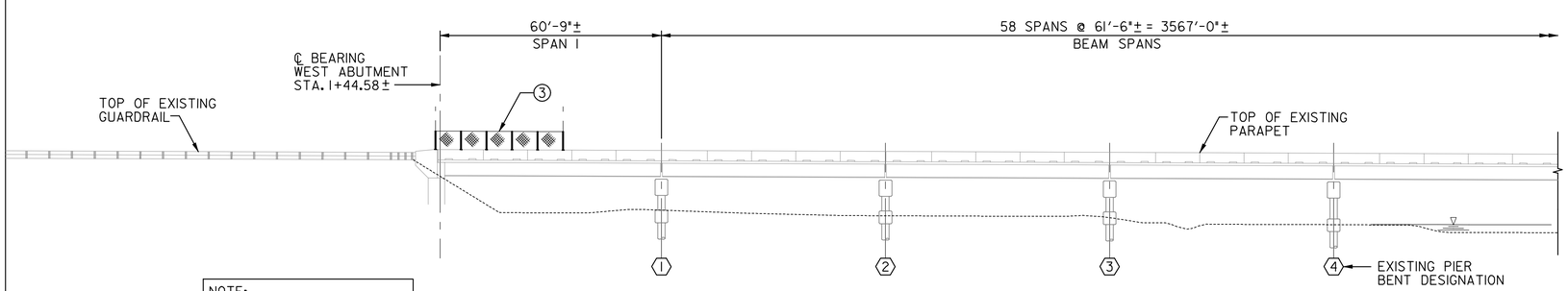

NOTE:
EXISTING AND PROPOSED SHORE FENCING NOT SHOWN IN ELEVATION FOR CLARITY.

ELEVATION
SCALE: 1"=20'

GENERAL NOTES FOR SHORE FENCING

SPECIFICATIONS: - SHA SPECIFICATIONS DATED JULY 2008 - REVISIONS THEREOF AND ADDITIONS THERETO AND SPECIAL PROVISIONS FOR MATERIALS AND CONSTRUCTION.

AASHTO LRFD BRIDGE DESIGN SPECIFICATIONS DATED 2007 FOR DESIGN.

DESIGN WIND VELOCITY = 110 mph

WELDING SHALL BE IN ACCORDANCE WITH AWS BRIDGE WELDING CODE D1.5-02

MATERIALS: ALL POSTS, BRACES, FITTINGS AND HARDWARE SHALL MEET THE REQUIREMENTS OF AASHTO M181. THEY SHALL BE ZINC-COATED STEEL EXCEPT CASTINGS FOR OTHER THAN ORNAMENTAL PURPOSES WHICH SHALL BE ZINC-COATED MALLEABLE IRON. ALL PLATES SHALL BE STEEL CONFORMING TO ASTM DESIGNATION:A 36. ALL PARTS SHALL BE STEEL GALVANIZED UNLESS OTHERWISE NOTED AND ALL GALVANIZED SHALL BE DONE AFTER FABRICATION. PRECOATED LONGITUDINAL RAILS, IF CUT, WILL HAVE CUT END COATED WITH A ZINC-RICH PRIMER MEETING THE REQUIREMENTS OF FEDERAL SPECIFICATIONS TT-P-641 TYPE II, PRIOR TO ERECTION.

EXISTING STRUCTURE: ALL DIMENSIONS AFFECTED BY THE GEOMETRICS, AND/OR LOCATION OF THE EXISTING STRUCTURE SHALL BE CHECKED IN THE FIELD BY THE CONTRACTOR BEFORE ANY CONSTRUCTION IS DONE, AND BEFORE ANY REINFORCING STEEL, ETC. IS ORDERED OR FABRICATED. THE ± MARKS SHOWN WITH DIMENSIONS AND STATIONS DO NOT INDICATE ANY DEGREE OF PRECISION. THESE MARKS (±) INDICATE EXISTING DIMENSIONS AND STATIONS THAT MAY VARY AND DO REQUIRE FIELD VERIFICATION BY THE CONTRACTOR.

EXISTING STRUCTURE SHOWN IN LONG DASHED LINES.

BOLTS: ALL STAINLESS STEEL BOLTS SHALL CONFORM TO ASTM DESIGNATION A-193 TYPE 304.

ALL STAINLESS STEEL NUTS SHALL CONFORM TO ASTM DESIGNATION A-276 TYPE 304.

LOCKS: LOCKS SHALL BE KEYED ACCORDING TO INSTRUCTIONS FROM MdTA MAINTENANCE PERSONNEL.

SHORE SECURITY FENCE: ALL MATERIALS FOR THE SHORE SECURITY FENCE, INCLUDING THE ½"x3"x10.5 GAUGE GALVANIZED AND PVC COATED GRID FENCE FABRIC, COVER STRAPS, TAMPERPROOF BOLTS, ETC., SHALL BE AS MANUFACTURED BY RIVERDALE MILLS CORPORATION OR APPROVED EQUAL.

WORK REQUIRED LEGEND:

1. INSTALL NEW SECURITY FENCE WITH BARBED WIRE TO TIE EXISTING FENCE LINES UNDER THE EAST AND WEST APPROACH.
2. INSTALL NEW SECURITY GATE. (WIDTH)
3. INSTALL NEW CHAIN LINK FENCE ON TOP OF EAST AND WEST ABUTMENT PARAPETS (NORTH AND SOUTH). INCLUDING ANTI-CLIMB SHIELDS AT THE TERMINUSES.
4. REMOVE EXISTING CHAIN LINK FENCE.

NOTES:

1. UNLESS NOTED OTHERWISE, BRIDGE FENCING SHALL BE CHAIN LINK SAFETY FENCE TYPE II, SEE STD. NO BR-SS(3.03)-05-23.
2. FOR CHAIN LINK SAFETY FENCE ANTI-CLIMB SHIELD DETAILS, SEE STD. NO. BR-SS (3.05)-75-25.
3. PROPOSED GATE OPENING SHALL BE CENTERED TO COINCIDE WITH EXISTING W-BEAM BARRICADE OPENING.

PRIME ENGINEERING & ARCHITECTURE, INC.
3106 LORD BALTIMORE DRIVE, SUITE 106
BALTIMORE, MARYLAND 21244
PH: (410) 265-1956; FAX (410) 265-1954

PROFESSIONAL CERTIFICATION

"I HEREBY CERTIFY THAT THESE DOCUMENTS WERE PREPARED OR APPROVED BY ME, AND THAT I AM A DULY LICENSED PROFESSIONAL ENGINEER UNDER THE LAWS OF THE STATE OF MARYLAND, LICENSE NO. 25196 EXPIRATION DATE: 07-07-2011."

STATE OF MARYLAND · RUEL W. MANUEL · No. 25196 · PROFESSIONAL ENGINEER

MARYLAND TRANSPORTATION AUTHORITY
Engineering Division

ADDENDUMS & REVISIONS			
NO.	DESCRIPTION	BY	DATE

ACCESS CONTROL FENCING AT MAJOR BRIDGES
HARRY W. NICE MEMORIAL BRIDGE
CHARLES COUNTY

WEST SHORE - PLAN AND ELEVATION

DESIGNED BY RHM	DRAWN BY JLH	CHECKED BY
CONST. REVIEW BY	DATE DEC 2008	SCALE AS NOTED

CONTRACT NO. MA-2278-000-002
DRAWING NO. NB-01
SHEET NO. 8 OF 21

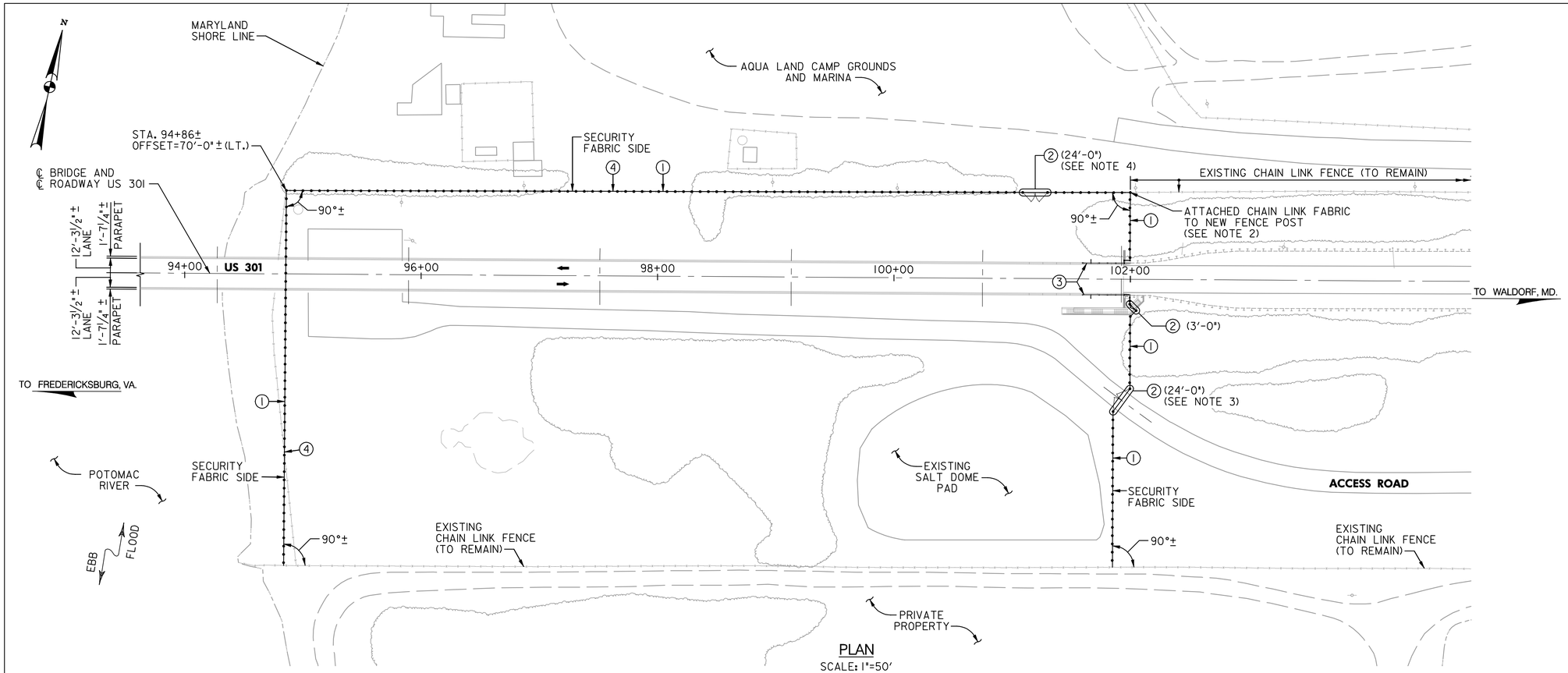

PLAN
SCALE: 1"=50'

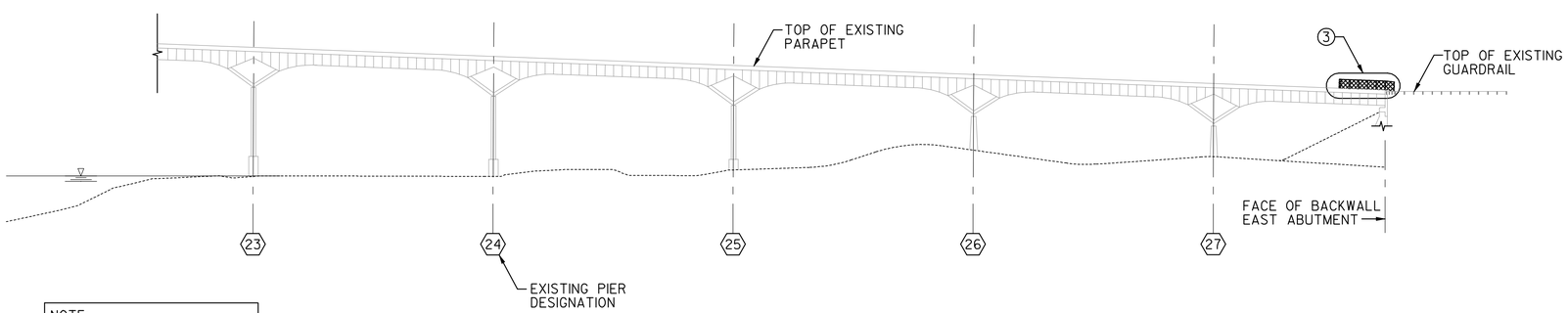

NOTE:
EXISTING AND PROPOSED SHORE FENCING NOT SHOWN IN ELEVATION FOR CLARITY.

ELEVATION
SCALE: 1"=50'

NOTES:

1. FOR WORK REQUIRED LEGEND, SEE SHEET NB-01.
2. ATTACH EXISTING CHAIN LINK FENCE TO NEW FENCE POST. THE SPAN BETWEEN EXISTING AND PROPOSED FENCE POST SHALL BE LESS THAN OR EQUAL TO THE EXISTING CHAIN LINK FENCE POST SPACING. THE EXISTING CHAIN LINK FENCE SHALL BE IN GOOD CONDITION AS DETERMINED BY THE ENGINEER. THE REATTACHED CHAIN LINK FABRIC INCLUDING UP TO THREE POST SPACING SHALL BE TAUT AND IS SUBJECT TO THE PERFORMANCE REQUIREMENTS OF THE SPECIFICATIONS.
3. THE PROPOSED VEHICULAR ACCESS GATE SHALL BE SET PERPENDICULAR AND CENTERED TO THE ROADWAY.
4. THE PROPOSED VEHICULAR ACCESS GATE TO THE AQUA LAND CAMP GROUNDS AND MARINA SHALL BE SET IN THE SAME VICINITY OF THE EXISTING ACCESS GATE (TO BE REMOVED).

PRIME ENGINEERING & ARCHITECTURE, INC.
3106 LORD BALTIMORE DRIVE, SUITE 106
BALTIMORE, MARYLAND 21244
PH: (410) 265-1956; FAX (410) 265-1954

PROFESSIONAL CERTIFICATION

"I HEREBY CERTIFY THAT THESE DOCUMENTS WERE PREPARED OR APPROVED BY ME, AND THAT I AM A DULY LICENSED PROFESSIONAL ENGINEER UNDER THE LAWS OF THE STATE OF MARYLAND, LICENSE NO. 25196 EXPIRATION DATE: 07-07-2011."

STATE OF MARYLAND · JOSEPH H. MANUEL · No. 25196 · PROFESSIONAL ENGINEER

MARYLAND TRANSPORTATION AUTHORITY
Engineering Division

ADDENDUMS & REVISIONS

NO.	DESCRIPTION	BY	DATE

ACCESS CONTROL FENCING AT MAJOR BRIDGES

HARRY W. NICE MEMORIAL BRIDGE
CHARLES COUNTY

EAST SHORE - PLAN AND ELEVATION

DESIGNED BY RHM	DRAWN BY JLH	CHECKED BY
CONST. REVIEW BY	DATE DEC 2008	SCALE AS NOTED

CONTRACT NO. MA-2278-000-002
DRAWING NO. NB-02
SHEET NO. 9 OF 21

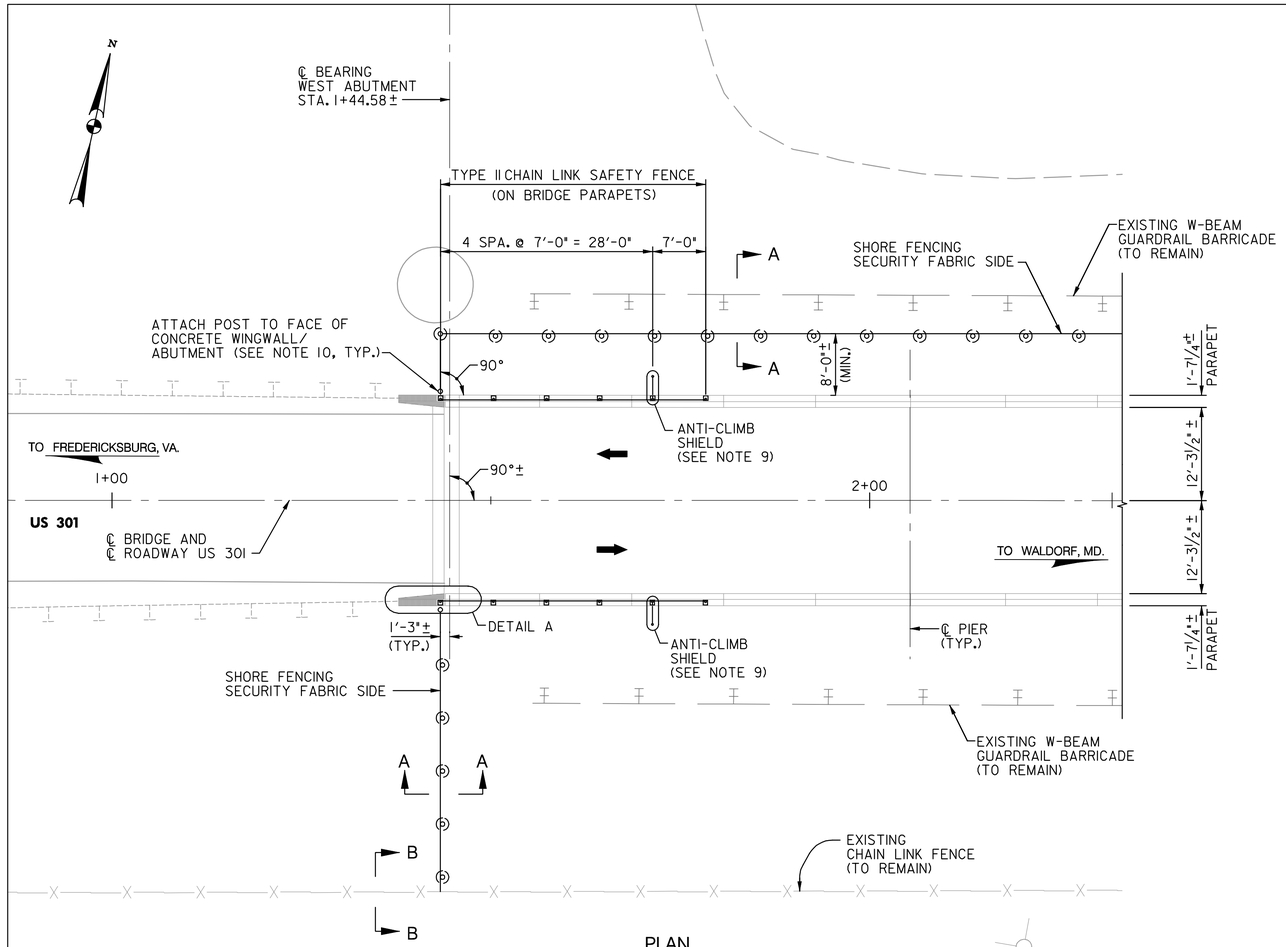

PLAN
SCALE: 1"=10'

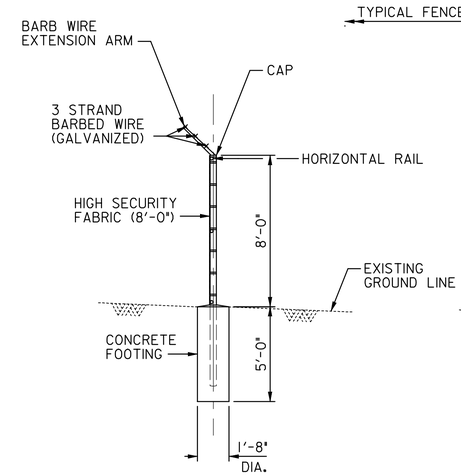

SECTION A–A
SCALE: 1/4"=1'-0"

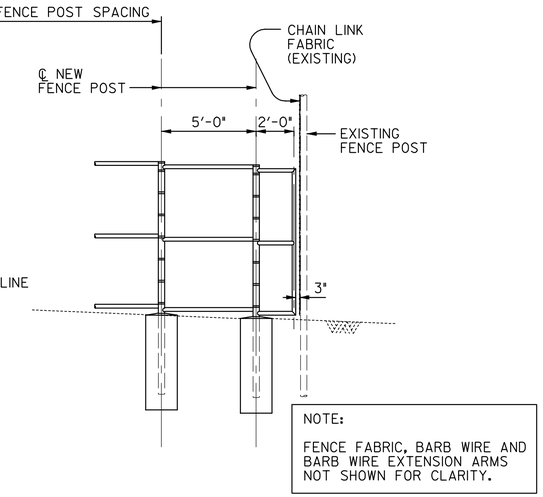

SECTION B–B
(CLOSURE PANEL)
SCALE: 1/4"=1'-0"

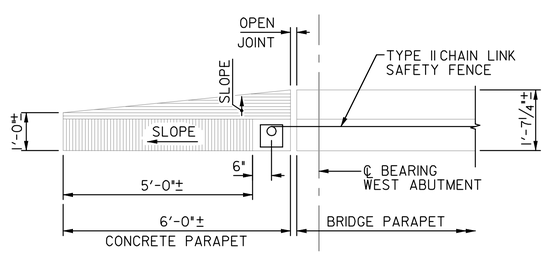

DETAIL A
SCALE: 1/2"=1'-0"

NOTES:

1. ALL UNDERGROUND UTILITIES SHOWN ON THESE PLANS ARE SCHEMATIC ONLY AND MAY NOT BE COMPLETE. THE CONTRACTOR SHALL BE RESPONSIBLE FOR NOTIFYING MISS UTILITY PRIOR TO CONSTRUCTION SO THAT ALL UTILITIES MAY BE LOCATED IN THE FIELD.
2. THE CONTRACTOR SHALL PROVIDE THE NECESSARY PROTECTION AND NOT DAMAGE THE SAID UTILITIES. ALL UTILITIES ARE TO REMAIN UNDISTURBED AND IN-PLACE.
3. THE CONTRACTOR MAY ADJUST SHORE FENCE POST SPACING PROVIDED THE OVERALL SPACING IS RELATIVELY UNIFORM AND DOES NOT EXCEED 7'-0" CENTER-TO-CENTER OF POST.
4. THE CONTRACTOR SHALL FIELD VERIFY ALL POSTS SPACING PRIOR TO FABRICATION AND ORDERING OF MATERIALS.
5. ALL STRUCTURAL STEEL (FENCE POSTS, HORIZONTAL STRUTS) SHALL BE GALVANIZED.
6. FENCE POSTS SHALL BE 3.5" O.D. EXTRA STRONG PIPE WEIGHING 10.25 LB/FT, HIGH STRENGTH GRADE (83 ksi).
7. ALL HORIZONTAL STRUTS SHALL BE 2.375" O.D. EXTRA STRONG PIPE WEIGHING 5.02 LB/FT. REGULAR GRADE (30 ksi).
8. FOR TYPE II CHAIN LINK SAFETY FENCE DETAILS SEE MD STD. NO. BR-SS(3.01)-75-21 AND BR-SS(3.03)-75-23.
9. FOR ANTI-CLIMB SHIELD DETAILS, SEE MD STD. NO. BR-SS(3.05)-75-25.
10. FOR FENCE POST ATTACHMENT TO CONCRETE BRIDGE DETAILS, SEE STD. MD 690.21.

PRIME
ENGINEERING & ARCHITECTURE, INC.
3106 LORD BALTIMORE DRIVE, SUITE 106
BALTIMORE, MARYLAND 21244
PH: (410) 265-1956; FAX (410) 265-1954

PROFESSIONAL CERTIFICATION

"I HEREBY CERTIFY THAT THESE DOCUMENTS WERE PREPARED OR APPROVED BY ME, AND THAT I AM A DULY LICENSED PROFESSIONAL ENGINEER UNDER THE LAWS OF THE STATE OF MARYLAND, LICENSE NO. 25196 EXPIRATION DATE: 07-07-2011."

STATE OF MARYLAND · JULIE H. MANUEL · No. 25196 · PROFESSIONAL ENGINEER

MARYLAND TRANSPORTATION AUTHORITY
Engineering Division

ADDENDUMS & REVISIONS			
NO.	DESCRIPTION	BY	DATE

ACCESS CONTROL FENCING AT MAJOR BRIDGES

HARRY W. NICE MEMORIAL BRIDGE
CHARLES COUNTY

WEST ABUTMENT FENCING PLAN

DESIGNED BY RHM	DRAWN BY RHM	CHECKED BY	
CONST. REVIEW BY	DATE DEC 2008	SCALE AS NOTED	

CONTRACT NO. MA-2278-000-002
DRAWING NO. NB–03
SHEET NO. 10 OF 21

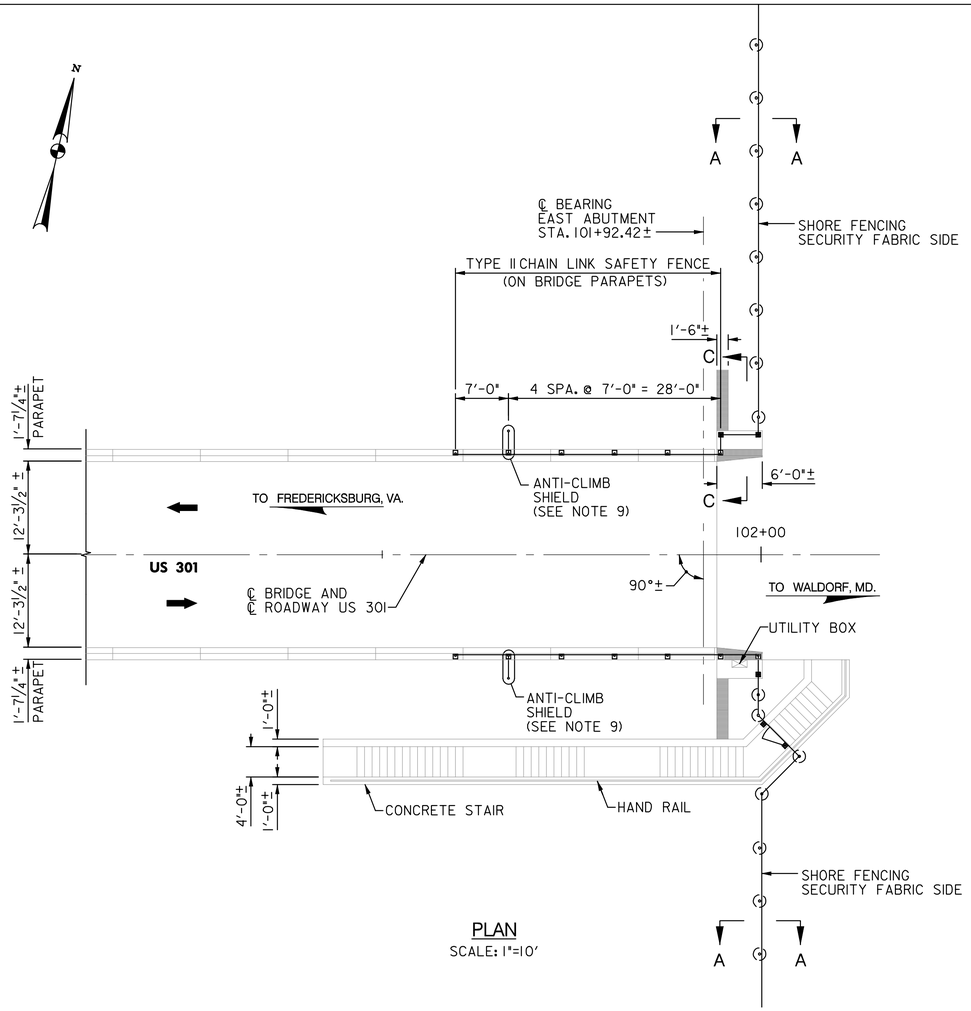

PLAN
SCALE: 1"=10'

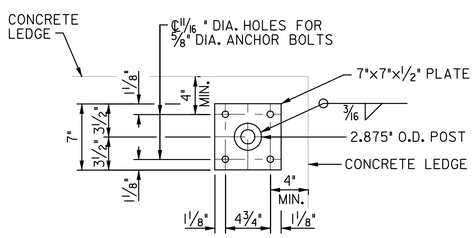

PLAN
TYPE 1 BASE PLATE
SCALE: 1 1/2"=1'-0"

NOTES:

1. ALL UNDERGROUND UTILITIES SHOWN ON THESE PLANS ARE SCHEMATIC ONLY AND MAY NOT BE COMPLETE. THE CONTRACTOR SHALL BE RESPONSIBLE FOR NOTIFYING MISS UTILITY PRIOR TO CONSTRUCTION SO THAT ALL UTILITIES MAY BE LOCATED IN THE FIELD.
2. THE CONTRACTOR SHALL PROVIDE THE NECESSARY PROTECTION AND NOT DAMAGE THE SAID UTILITIES. ALL UTILITIES ARE TO REMAIN UNDISTURBED AND IN-PLACE.
3. THE CONTRACTOR MAY ADJUST SHORE FENCE POST SPACING PROVIDED THE OVERALL SPACING IS RELATIVELY UNIFORM AND DOES NOT EXCEED 7'-0" CENTER-TO-CENTER OF POST.
4. THE CONTRACTOR SHALL FIELD VERIFY ALL POSTS SPACING PRIOR TO FABRICATION AND ORDERING OF MATERIALS.
5. ALL STRUCTURAL STEEL (FENCE POSTS, HORIZONTAL STRUTS) SHALL BE GALVANIZED.
6. FENCE POSTS SHALL BE 3.5" O.D. EXTRA STRONG PIPE WEIGHING 10.25 LB/FT, HIGH STRENGTH GRADE (83 ksi).
7. ALL HORIZONTAL STRUTS SHALL BE 2.375" O.D. EXTRA STRONG PIPE WEIGHING 5.02 LB/FT. REGULAR GRADE (30 ksi).
8. FOR TYPE II CHAIN LINK SAFETY FENCE DETAILS SEE MD STD. NO. BR-SS(3.01)-75-21 AND BR-SS(3.03)-75-23.
9. FOR ANTI-CLIMB SHIELD DETAILS, SEE MD STD. NO. BR-SS(3.05)-75-25.
10. FOR FENCE POST ATTACHMENT TO CONCRETE BRIDGE DETAILS, SEE STD. MD 690.21.

PRIME
ENGINEERING & ARCHITECTURE, INC.
3106 LORD BALTIMORE DRIVE, SUITE 106
BALTIMORE, MARYLAND 21244
PH: (410) 265-1956; FAX (410) 265-1954

PROFESSIONAL CERTIFICATION

"I HEREBY CERTIFY THAT THESE DOCUMENTS WERE PREPARED OR APPROVED BY ME, AND THAT I AM A DULY LICENSED PROFESSIONAL ENGINEER UNDER THE LAWS OF THE STATE OF MARYLAND, LICENSE NO. 25196
EXPIRATION DATE: 07-07-2011."

STATE OF MARYLAND
MICHAEL H. MANUEL
25196
PROFESSIONAL ENGINEER

MARYLAND TRANSPORTATION AUTHORITY
Engineering Division

ADDENDUMS & REVISIONS

NO.	DESCRIPTION	BY	DATE

ACCESS CONTROL FENCING AT MAJOR BRIDGES

HARRY W. NICE MEMORIAL BRIDGE
CHARLES COUNTY

EAST ABUTMENT FENCING PLAN

CONTRACT NO. MA-2278-000-002
DRAWING NO. NB-04

DESIGNED BY RHM | DRAWN BY RHM | CHECKED BY
CONST. REVIEW BY | DATE DEC 2008 | SCALE AS NOTED

SHEET NO. 11 OF 21

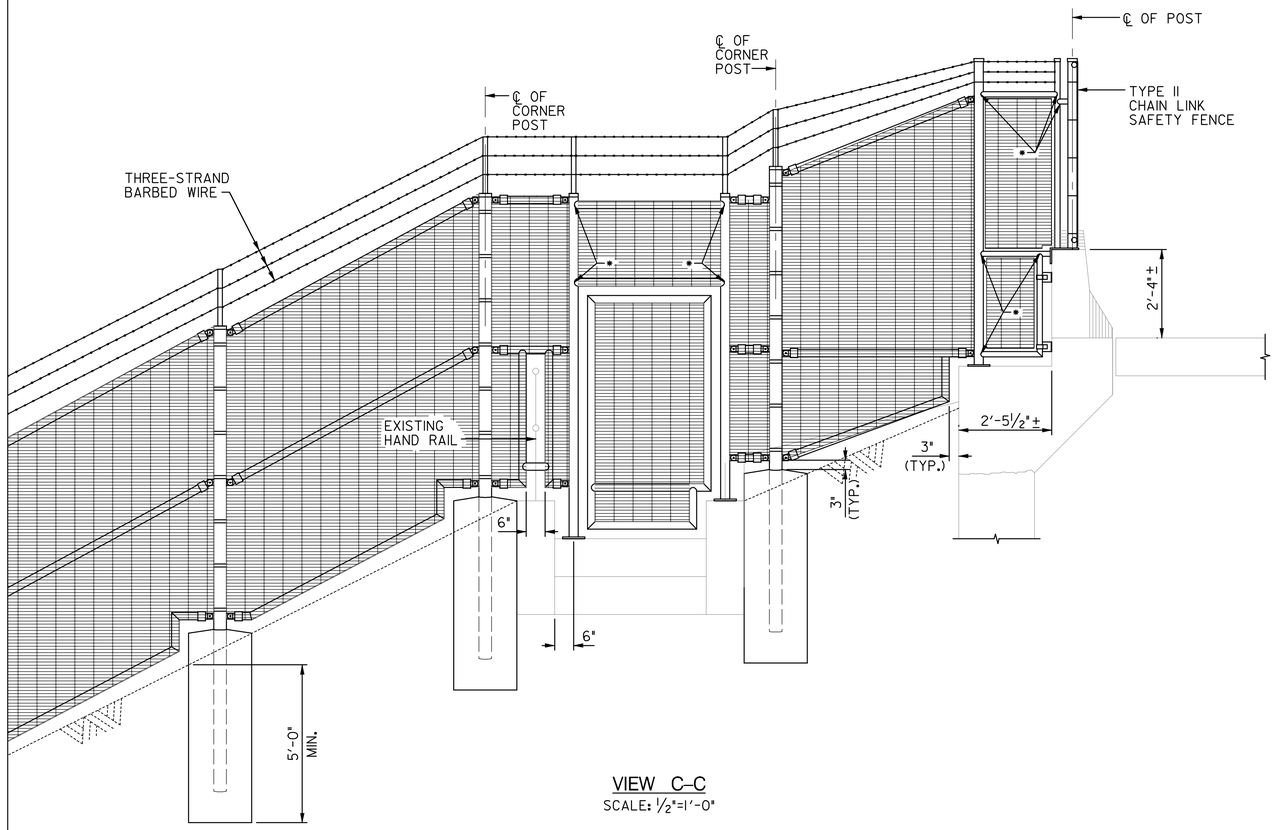

VIEW C–C
SCALE: ½"=1'-0"

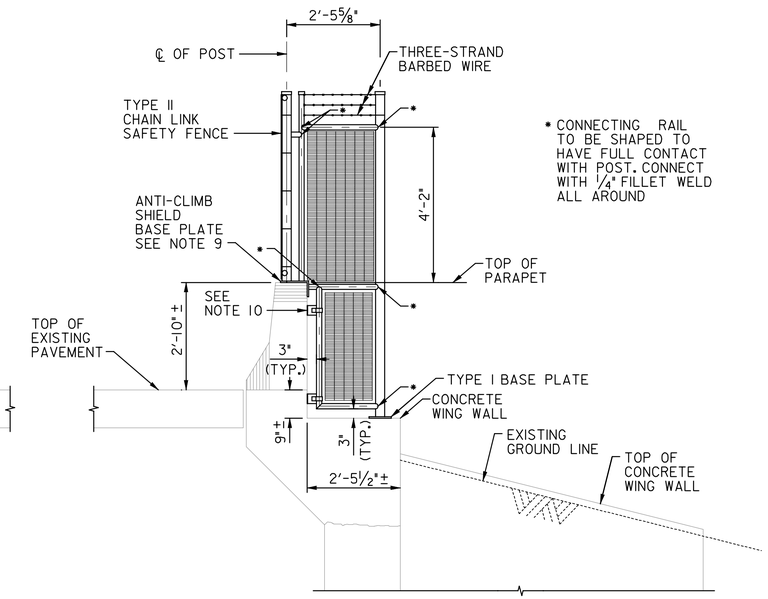

VIEW D–D
SCALE: ½"=1'-0"

NOTES:

1. ALL UNDERGROUND UTILITIES SHOWN ON THESE PLANS ARE SCHEMATIC ONLY AND MAY NOT BE COMPLETE. THE CONTRACTOR SHALL BE RESPONSIBLE FOR NOTIFYING MISS UTILITY PRIOR TO CONSTRUCTION SO THAT ALL UTILITIES MAY BE LOCATED IN THE FIELD.
2. THE CONTRACTOR SHALL PROVIDE THE NECESSARY PROTECTION AND NOT DAMAGE THE SAID UTILITIES. ALL UTILITIES ARE TO REMAIN UNDISTURBED AND IN-PLACE.
3. THE CONTRACTOR MAY ADJUST SHORE FENCE POST SPACING PROVIDED THE OVERALL SPACING IS RELATIVELY UNIFORM AND DOES NOT EXCEED 7'-0" CENTER-TO-CENTER OF POST.
4. THE CONTRACTOR SHALL FIELD VERIFY ALL POSTS SPACING PRIOR TO FABRICATION AND ORDERING OF MATERIALS.
5. ALL STRUCTURAL STEEL (FENCE POSTS, HORIZONTAL STRUTS) SHALL BE GALVANIZED.
6. FENCE POSTS SHALL BE 3.5" O.D. EXTRA STRONG PIPE WEIGHING 10.25 LB/FT, HIGH STRENGTH GRADE (83 ksi).
7. ALL HORIZONTAL STRUTS SHALL BE 2.375" O.D. EXTRA STRONG PIPE WEIGHING 5.02 LB/FT. REGULAR GRADE (30 ksi).
8. FOR TYPE II CHAIN LINK SAFETY FENCE DETAILS SEE MD STD. NO. BR-SS(3.01)-75-21 AND BR-SS(3.03)-75-23.
9. FOR ANTI-CLIMB SHIELD DETAILS, SEE MD STD. NO. BR-SS(3.05)-75-25.
10. FOR FENCE POST ATTACHMENT TO CONCRETE BRIDGE DETAILS, SEE STD. MD 690.21.

PRIME
ENGINEERING & ARCHITECTURE, INC.
3106 LORD BALTIMORE DRIVE, SUITE 106
BALTIMORE, MARYLAND 21244
PH: (410) 265-1956; FAX (410) 265-1954

PROFESSIONAL CERTIFICATION

"I HEREBY CERTIFY THAT THESE DOCUMENTS WERE PREPARED OR APPROVED BY ME, AND THAT I AM A DULY LICENSED PROFESSIONAL ENGINEER UNDER THE LAWS OF THE STATE OF MARYLAND, LICENSE NO. 25196 EXPIRATION DATE: 07-07-2011."

STATE OF MARYLAND · RALPH MANUEL · No. 25196 · PROFESSIONAL ENGINEER

MARYLAND TRANSPORTATION AUTHORITY
Engineering Division

ADDENDUMS & REVISIONS			
NO.	DESCRIPTION	BY	DATE

ACCESS CONTROL FENCING AT MAJOR BRIDGES

HARRY W. NICE MEMORIAL BRIDGE
CHARLES COUNTY

EAST ABUTMENT FENCING DETAILS

CONTRACT NO. MA-2278-000-002
DRAWING NO. NB–05

DESIGNED BY RHM	DRAWN BY RHM	CHECKED BY
CONST. REVIEW BY	DATE DEC 2008	SCALE AS NOTED

SHEET NO. 12 OF 21

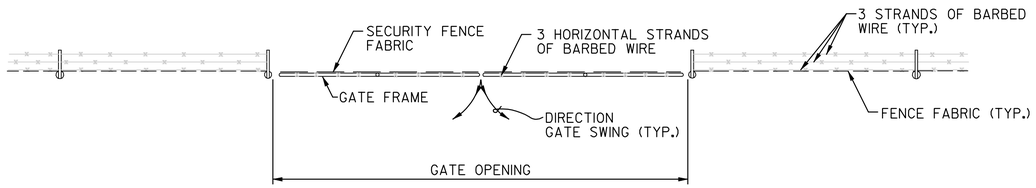

PLAN

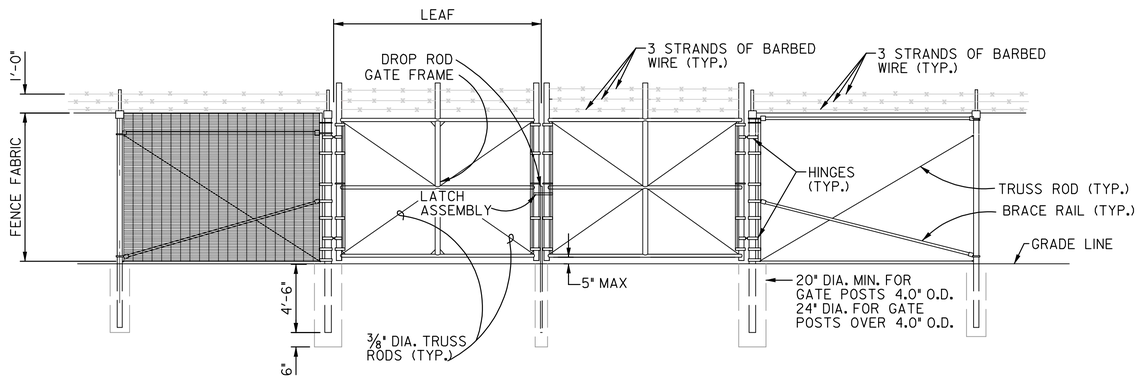

ELEVATION
(DOUBLE SWING GATE)
SCALE: NONE

GATE POST SCHEDULE	
GATE LEAF WIDTH (NOMINAL)	OUTSIDE DIMENSION (NOMINAL)
6' OR LESS	4.0" O.D. (10.25#/ft, 83 ksi)
GREATER THAN 6' TO 12'	6.625" O.D. (28.57#/ft, 83 ksi)

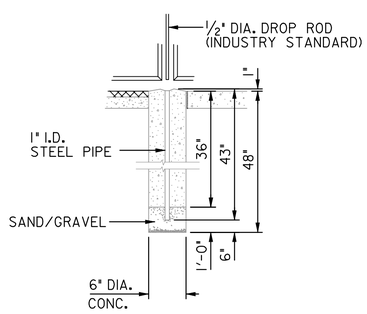

DROP ROD FOUNDATION
SCALE: NONE

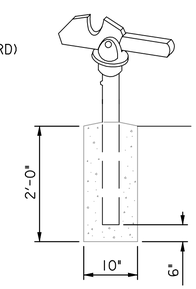

GATE KEEPER
(TO HOLD GATE OPEN)
SCALE: NONE

SWING GATE DETAILS

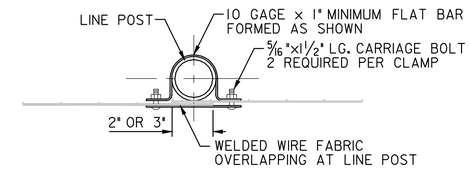

LINE POST DETAIL
SCALE: NONE

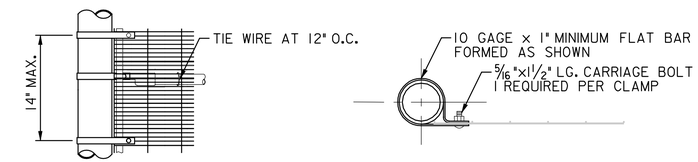

END/CORNER POST DETAIL
SCALE: NONE

NOTES:

1. DETAILS SHOWN ARE TO CLARIFY REQUIREMENTS AND ARE NOT INTENDED TO LIMIT OTHER TYPE OF FENCE SECTIONS AND METHODS OF INSTALLATION WHICH COMPLY WITH THE SPECIFICATIONS.
2. SWING GATES SHALL BE CONSTRUCTED WITH PADLOCAKBLE DROP RODS AND LATCH ASSEMBLY.
3. GATE KEEPERS SHALL BE PROVIDED FOR 24' WIDE GATE OPENINGS ONLY (FSK AND NB FACILITIES).
4. GATE FRAMES SHALL BE OF WELDED CONSTRUCTION. THE CONTRACTOR SHALL BE REPONSIBLE FOR THE PROPER RIGID CONSTRUCTION OF ALL GATES SUPPLIED.

PRIME
ENGINEERING & ARCHITECTURE, INC.
3106 LORD BALTIMORE DRIVE, SUITE 106
BALTIMORE, MARYLAND 21244
PH: (410) 265-1956; FAX (410) 265-1954

PROFESSIONAL CERTIFICATION

"I HEREBY CERTIFY THAT THESE DOCUMENTS WERE PREPARED OR APPROVED BY ME, AND THAT I AM A DULY LICENSED PROFESSIONAL ENGINEER UNDER THE LAWS OF THE STATE OF MARYLAND, LICENSE NO. 25196 EXPIRATION DATE: 07-07-2011."

STATE OF MARYLAND · DEL H. MANUEL · No. 25196 · PROFESSIONAL ENGINEER

MARYLAND TRANSPORTATION AUTHORITY
Engineering Division

ADDENDUMS & REVISIONS

NO.	DESCRIPTION	BY	DATE

ACCESS CONTROL FENCING AT MAJOR BRIDGES
THOMAS J. HATEM, FRANCIS SCOTT KEY, AND HARRY W. NICE MEMORIAL BRIDGE
HARFORD/CECIL, BALTIMORE CITY/COUNTY/ANNE ARUNDEL AND CHARLES COUNTY

FENCING DETAILS

DESIGNED BY RHM	DRAWN BY RHM	CHECKED BY	
CONST. REVIEW BY	DATE DEC 2008	SCALE AS NOTED	

CONTRACT NO. MA-2278-000-002
DRAWING NO. DE-01
SHEET NO. 13 OF 21

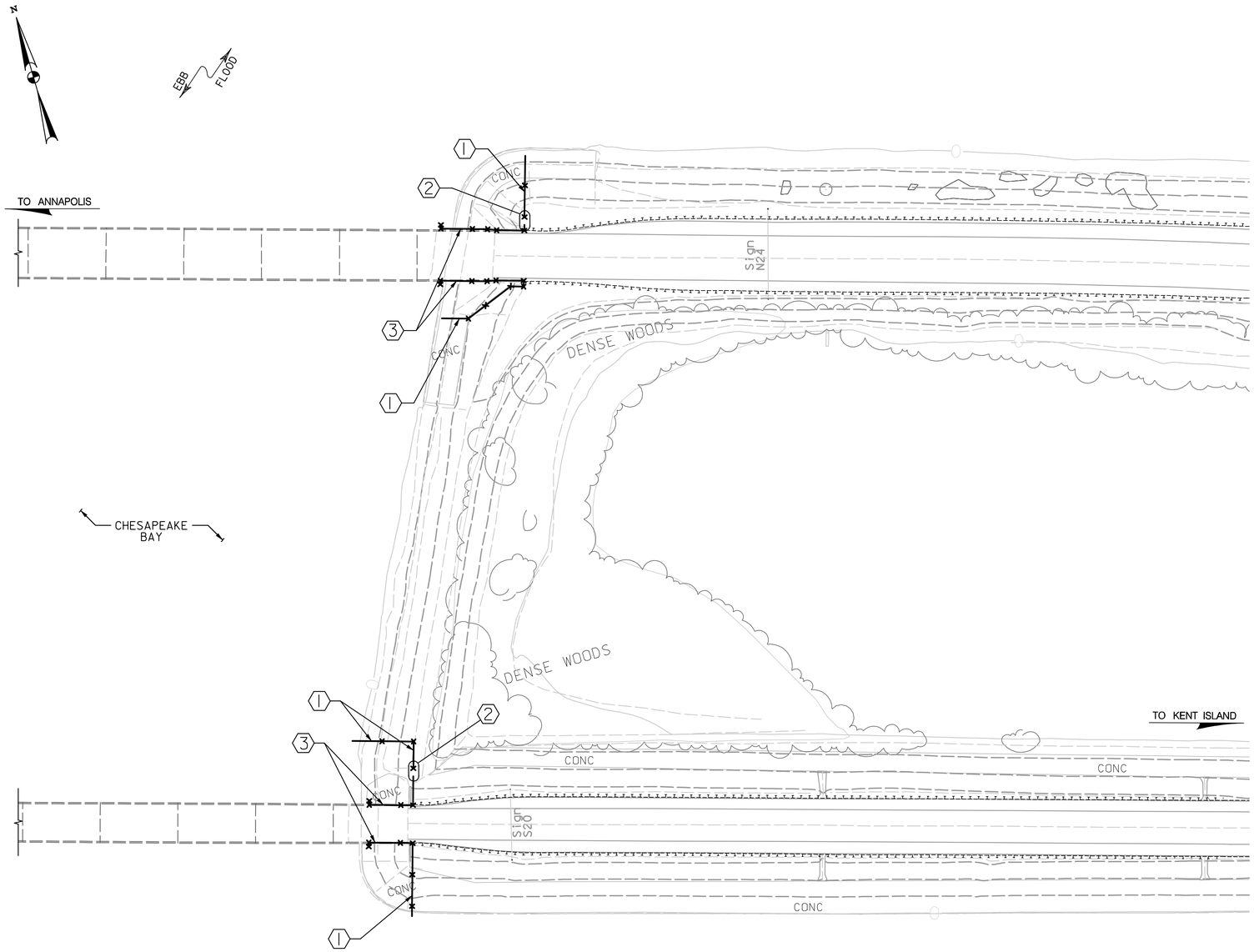

PLAN
SCALE: 1"=50'

GENERAL NOTES FOR SHORE FENCING

SPECIFICATIONS: - SHA SPECIFICATIONS DATED JULY 2008
- REVISIONS THEREOF AND ADDITIONS THERETO AND SPECIAL PROVISIONS FOR MATERIALS AND CONSTRUCTION.

AASHTO LRFD BRIDGE DESIGN SPECIFICATIONS DATED 2007 FOR DESIGN.

DESGIN WIND VELOCITY = 110 mph

WELDING SHALL BE IN ACCORDANCE WITH AWS BRIDGE WELDING CODE D1.5-02

MATERIALS: ALL POSTS, BRACES, FITTINGS AND HARDWARE SHALL MEET THE REQUIREMENTS OF AASHTO M181. THEY SHALL BE ZINC-COATED STEEL EXCEPT CASTINGS FOR OTHER THAN ORNAMENTAL PURPOSES WHICH SHALL BE ZINC-COATED MALLEABLE IRON. ALL PLATES SHALL BE STEEL CONFORMING TO ASTM DESIGNATION:A 36. ALL PARTS SHALL BE STEEL GALVANIZED UNLESS OTHERWISE NOTED AND ALL GALVANIZED SHALL BE DONE AFTER FABRICATION. PRECOATED LONGITUDINAL RAILS, IF CUT, WILL HAVE CUT END COATED WITH A ZINC-RICH PRIMER MEETING THE REQUIREMENTS OF FEDERAL SPECIFICATIONS TT-P-641 TYPE II, PRIOR TO ERECTION.

EXISTING STRUCTURE: ALL DIMENSIONS AFFECTED BY THE GEOMETRICS, AND/OR LOCATION OF THE EXISTING STRUCTURE SHALL BE CHECKED IN THE FIELD BY THE CONTRACTOR BEFORE ANY CONSTRUCTION IS DONE, AND BEFORE ANY REINFORCING STEEL, ETC. IS ORDERED OR FABRICATED. THE ± MARKS SHOWN WITH DIMENSIONS AND STATIONS DO NOT INDICATE ANY DEGREE OF PRECISION. THESE MARKS (±) INDICATE EXISTING DIMENSIONS AND STATIONS THAT MAY VARY AND DO REQUIRE FIELD VERIFICATION BY THE CONTRACTOR.

EXISTING STRUCTURE SHOWN IN LONG DASHED LINES.

BOLTS: ALL STAINLESS STEEL BOLTS SHALL CONFORM TO ASTM DESIGNATION A-193 TYPE 304.

ALL STAINLESS STEEL NUTS SHALL CONFORM TO ASTM DESIGNATION A-276 TYPE 304.

LOCKS: LOCKS SHALL BE KEYED ACCORDING TO INSTRUCTIONS FROM MdTA MAINTENANCE PERSONNEL.

SHORE SECURITY FENCE: ALL MATERIALS FOR THE SHORE SECURITY FENCE, INCLUDING THE 1/2"x3"x10.5 GAUGE GALVANIZED AND PVC COATED GRID FENCE FABRIC, COVER STRAPS, TAMPERPROOF BOLTS, ETC., SHALL BE AS MANUFACTURED BY RIVERDALE MILLS CORPORATION OR APPROVED EQUAL.

WORK REQUIRED LEGEND:

(1) INSTALL NEW SECURITY FENCE WITH BARBED WIRE.

(2) INSTALL NEW SECURITY GATE.

(3) INSTALL NEW CHAIN LINK FENCE ON TOP OF EAST ABUTMENT PARAPETS (EASTBOUND AND WESTBOUND). FENCE TO BEGIN WHERE PROPOSED SECURITY FENCE WITH BARBED WIRE TIES INTO THE ABUTMENT. INSTALL ANTI-CLIMB SHIELDS AT THE TERMINUSES.

NOTES:

1. UNLESS NOTED OTHERWISE, BRIDGE FENCING SHALL BE CHAIN LINK SAFETY FENCE TYPE II, SEE STD. NO BR-SS(3.03)-05-23.
2. FOR CHAIN LINK SAFETY FENCE ANTI-CLIMB SHIELD DETAILS, SEE STD. NO. BR-SS (3.05)-75-25.

PRIME ENGINEERING & ARCHITECTURE, INC.
3106 LORD BALTIMORE DRIVE, SUITE 106
BALTIMORE, MARYLAND 21244
PH: (410) 265-1956; FAX (410) 265-1954

PROFESSIONAL CERTIFICATION

"I HEREBY CERTIFY THAT THESE DOCUMENTS WERE PREPARED OR APPROVED BY ME, AND THAT I AM A DULY LICENSED PROFESSIONAL ENGINEER UNDER THE LAWS OF THE STATE OF MARYLAND, LICENSE NO. 25196 EXPIRATION DATE: 07-07-2011."

STATE OF MARYLAND · RICHARD H. MANUEL · 25196 · PROFESSIONAL ENGINEER

MARYLAND TRANSPORTATION AUTHORITY
Engineering Division

ADDENDUMS & REVISIONS			
NO.	DESCRIPTION	BY	DATE

ACCESS CONTROL FENCING AT MAJOR BRIDGES
CHESAPEAKE BAY BRIDGE
ANNE ARUNDEL AND QUEEN ANNE'S COUNTIES
EAST SHORE
GENERAL FENCING PLAN

DESIGNED BY RHM	DRAWN BY JLH	CHECKED BY UPM
CONST. REVIEW BY	DATE DECEMBER 2008	SCALE AS NOTED

CONTRACT NO. MA-2278-000-002
DRAWING NO. ESF-01
SHEET NO. 14 OF 21

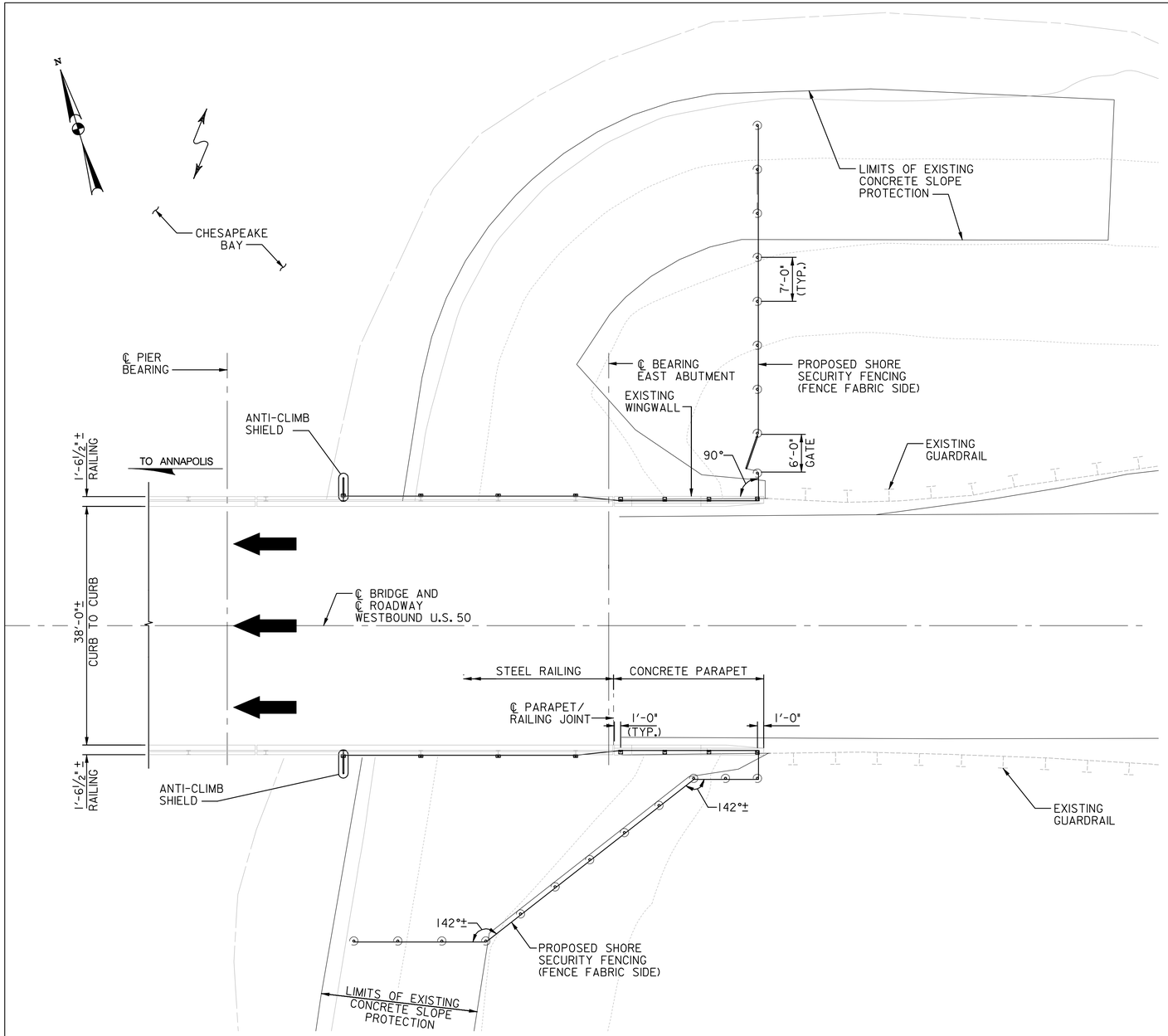

PLAN
SCALE: 1" = 10'-0"

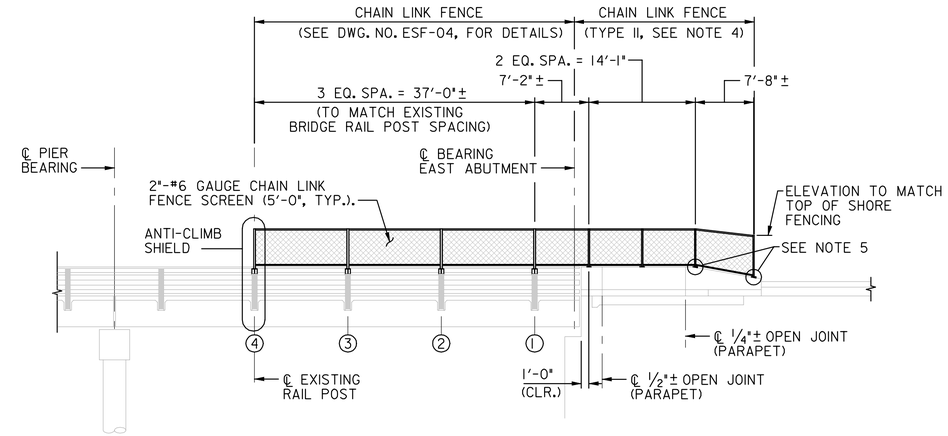

PARTIAL ELEVATION
(BRIDGE FENCING)
SCALE: 1" = 10'-0"

NOTES:

1. ALL UNDERGROUND UTILITIES SHOWN ON THESE PLANS ARE SCHEMATIC ONLY AND MAY NOT BE COMPLETE. THE CONTRACTOR SHALL BE RESPONSIBLE FOR NOTIFYING MISS UTILITY PRIOR TO CONSTRUCTION SO THAT ALL UTILITIES MAY BE LOCATED IN THE FIELD.
2. THE CONTRACTOR SHALL PROVIDE THE NECESSARY PROTECTION AND NOT DAMAGE THE SAID UTILITIES. ALL UTILITIES ARE TO REMAIN UNDISTURBED AND IN-PLACE.
3. THE CONTRACTOR MAY ADJUST THE SHORE FENCE POST SPACING PROVIDED THE OVERALL SPACING IS RELATIVELY UNIFORM AND DOES NOT EXCEED 7'-0" CENTER-TO-CENTER OF POST.
4. FOR TYPE II CHAIN LINK SAFETY FENCE DETAILS SEE MD STD. NO. BR-SS(3.01)-75-21 AND BR-SS(3.03)-75-23.
5. BEVEL BOTTOM OF BASEPLATE TO FOLLOW TOP OF PARAPET SLOPE. THE BASEPLATE SHALL BE ½" THICK MINIMUM.

PRIME ENGINEERING & ARCHITECTURE, INC.
3106 LORD BALTIMORE DRIVE, SUITE 106
BALTIMORE, MARYLAND 21244
PH: (410) 265-1956; FAX (410) 265-1954

PROFESSIONAL CERTIFICATION

"I HEREBY CERTIFY THAT THESE DOCUMENTS WERE PREPARED OR APPROVED BY ME, AND THAT I AM A DULY LICENSED PROFESSIONAL ENGINEER UNDER THE LAWS OF THE STATE OF MARYLAND, LICENSE NO. 25196 EXPIRATION DATE: 07-07-2011."

STATE OF MARYLAND · BRIEL M. MANUEL · No. 25196 · PROFESSIONAL ENGINEER

MARYLAND TRANSPORTATION AUTHORITY
Engineering Division

ADDENDUMS & REVISIONS

NO.	DESCRIPTION	BY	DATE

ACCESS CONTROL FENCING AT MAJOR BRIDGES
CHESAPEAKE BAY BRIDGE
ANNE ARUNDEL AND QUEEN ANNE'S COUNTIES
EAST SHORE WESTBOUND BRIDGE
FENCING PLAN AND ELEVATION

DESIGNED BY RHM	DRAWN BY JLH	CHECKED BY
CONST. REVIEW BY	DATE DECEMBER 2008	SCALE AS NOTED

CONTRACT NO. MA-2278-000-002
DRAWING NO. ESF-02
SHEET NO. 15 OF 21

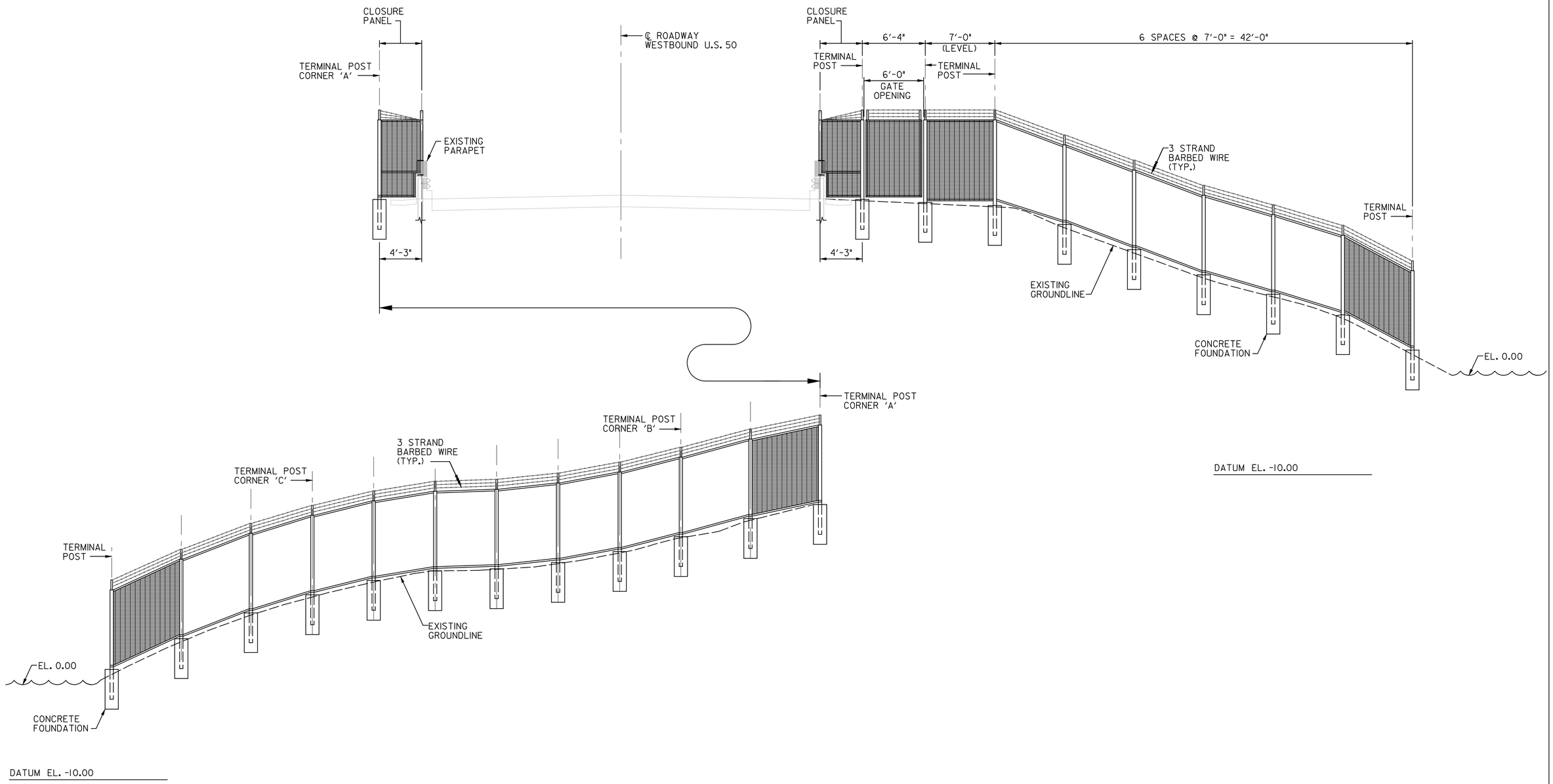

ELEVATION
SCALE: 1" = 5'-0"

PRIME
ENGINEERING & ARCHITECTURE, INC.
3106 LORD BALTIMORE DRIVE, SUITE 106
BALTIMORE, MARYLAND 21244
PH: (410) 265-1956; FAX (410) 265-1954

PROFESSIONAL CERTIFICATION

"I HEREBY CERTIFY THAT THESE DOCUMENTS WERE PREPARED OR APPROVED BY ME, AND THAT I AM A DULY LICENSED PROFESSIONAL ENGINEER UNDER THE LAWS OF THE STATE OF MARYLAND, LICENSE NO. 25196 EXPIRATION DATE: 07-07-2011."

STATE OF MARYLAND · BUELL MANUEL · No. 25196 · PROFESSIONAL ENGINEER

MARYLAND TRANSPORTATION AUTHORITY
Engineering Division

ADDENDUMS & REVISIONS

NO.	DESCRIPTION	BY	DATE

ACCESS CONTROL FENCING AT MAJOR BRIDGES
CHESAPEAKE BAY BRIDGE
ANNE ARUNDEL AND QUEEN ANNE'S COUNTIES
EAST SHORE WESTBOUND BRIDGE
SHORE FENCING ELEVATION

DESIGNED BY RHM	DRAWN BY JLH	CHECKED BY
CONST. REVIEW BY	DATE DECEMBER 2008	SCALE AS NOTED

CONTRACT NO. MA-2278-000-002
DRAWING NO. ESF-03
SHEET NO. 16 OF 21

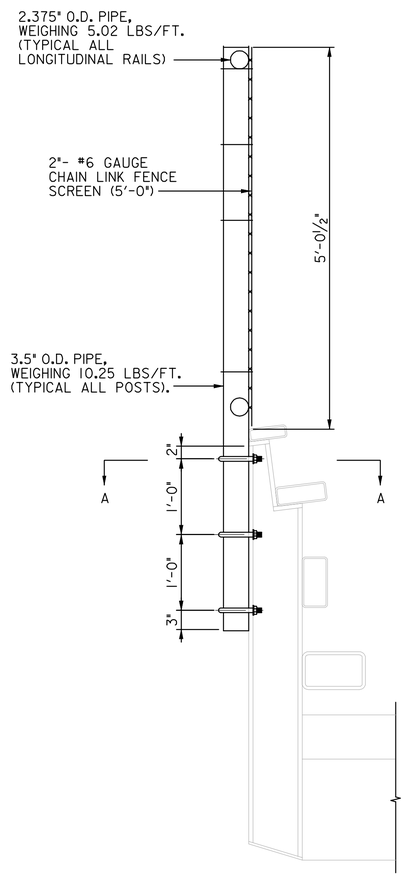

TYPICAL SECTION

SCALE: 1" = 1'-0"

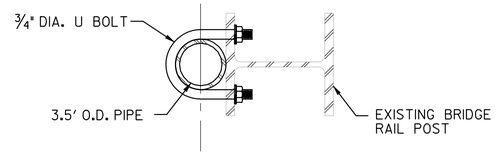

SECTION A–A

SCALE: 1/2" = 1'-0"

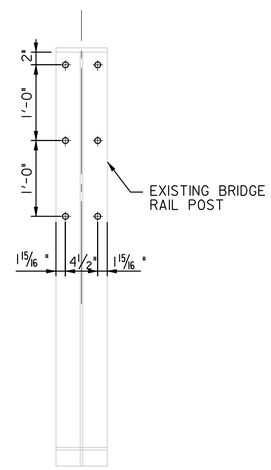

BOLT HOLE PATTERN

SCALE: 1" = 1'-0"

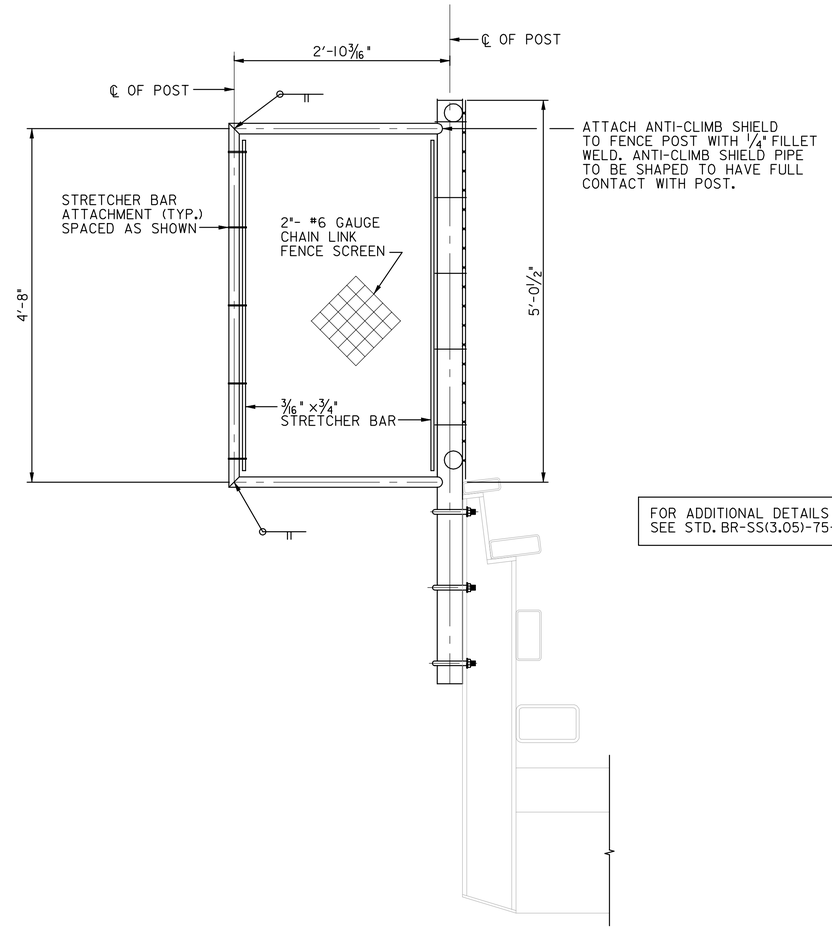

FOR ADDITIONAL DETAILS
SEE STD. BR-SS(3.05)-75-25

ANTI-CLIMB SHIELD

SCALE: 1" = 1'-0"

PRIME
ENGINEERING & ARCHITECTURE, INC.
3106 LORD BALTIMORE DRIVE, SUITE 106
BALTIMORE, MARYLAND 21244
PH: (410) 265-1956; FAX (410) 265-1954

PROFESSIONAL CERTIFICATION

"I HEREBY CERTIFY THAT THESE DOCUMENTS WERE PREPARED OR APPROVED BY ME, AND THAT I AM A DULY LICENSED PROFESSIONAL ENGINEER UNDER THE LAWS OF THE STATE OF MARYLAND, LICENSE NO. 25196 EXPIRATION DATE: 07-07-2011."

STATE OF MARYLAND · RICHARD H. MANUEL · No. 25196 · PROFESSIONAL ENGINEER

MARYLAND TRANSPORTATION AUTHORITY

Engineering Division

ADDENDUMS & REVISIONS

NO.	DESCRIPTION	BY	DATE

ACCESS CONTROL FENCING AT MAJOR BRIDGES

CHESAPEAKE BAY BRIDGE
ANNE ARUNDEL AND QUEEN ANNE'S COUNTIES

EAST SHORE WESTBOUND BRIDGE
BRIDGE FENCING DETAILS

DESIGNED BY RHM | DRAWN BY JLH | CHECKED BY UPM
CONST. REVIEW BY _____ | DATE DECEMBER 2008 | SCALE AS NOTED

CONTRACT NO. MA-2278-000-002
DRAWING NO. ESF-04
SHEET NO. 17 OF 21

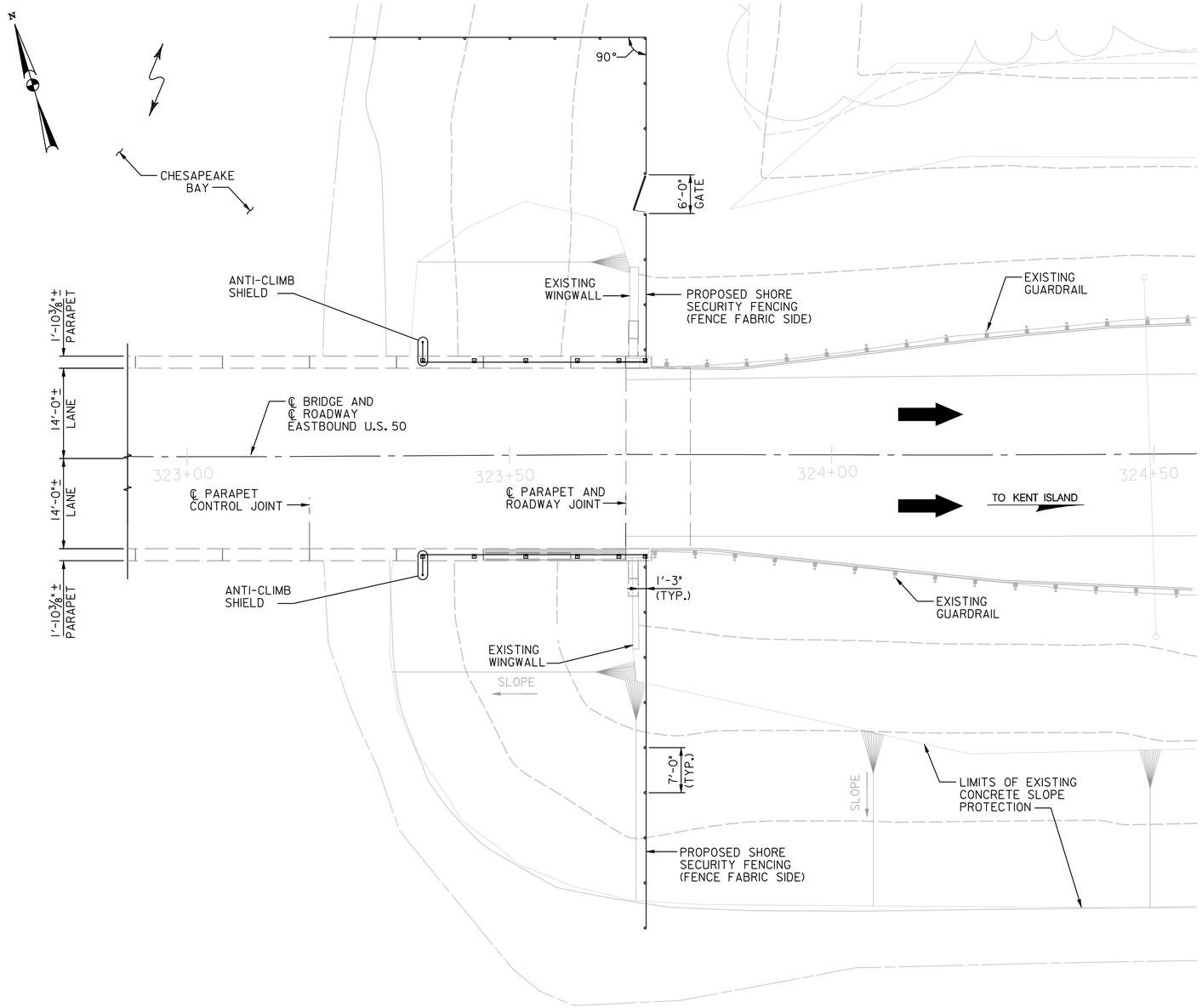

PLAN
SCALE: 1" = 10'-0"

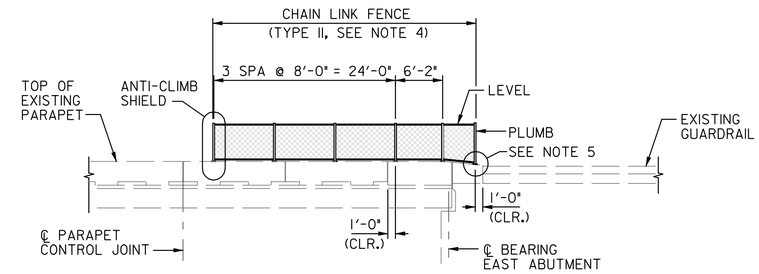

PARTIAL ELEVATION
(BRIDGE FENCING)
SCALE: 1" = 10'-0"

NOTES:

1. ALL UNDERGROUND UTILITIES SHOWN ON THESE PLANS ARE SCHEMATIC ONLY AND MAY NOT BE COMPLETE. THE CONTRACTOR SHALL BE RESPONSIBLE FOR NOTIFYING MISS UTILITY PRIOR TO CONSTRUCTION SO THAT ALL UTILITIES MAY BE LOCATED IN THE FIELD.
2. THE CONTRACTOR SHALL PROVIDE THE NECESSARY PROTECTION AND NOT DAMAGE THE SAID UTILITIES. ALL UTILITIES ARE TO REMAIN UNDISTURBED AND IN-PLACE.
3. THE CONTRATOR MAY ADJUST SHORE FENCE POST SPACING PROVIDED THE OVERALL SPACING IS RELATIVELY UNIFORM AND DOES NOT EXCEED 7'-0" CENTER-TO-CENTER OF POST.
4. FOR TYPE II CHAIN LINK SAFETY FENCE DETAILS SEE MD STD. NO. BR-SS(3.01)-75-21 AND BR-SS(3.03)-75-23.
5. BEVEL BOTTOM OF BASEPLATE TO FOLLOW TOP OF PARAPET SLOPE. THE BASEPLATE SHALL BE ½" THICK MINIMUM.
6. 6' WIDE OPENING, 8' TALL SINGLE-LEAF GATE BY MASTER HALCO OR APPROVED EQUAL. GATE FABRIC TO MATCH PROPOSED FENCE FABRIC.

PRIME
ENGINEERING & ARCHITECTURE, INC.
3106 LORD BALTIMORE DRIVE, SUITE 106
BALTIMORE, MARYLAND 21244
PH: (410) 265-1956; FAX (410) 265-1954

PROFESSIONAL CERTIFICATION

"I HEREBY CERTIFY THAT THESE DOCUMENTS WERE PREPARED OR APPROVED BY ME, AND THAT I AM A DULY LICENSED PROFESSIONAL ENGINEER UNDER THE LAWS OF THE STATE OF MARYLAND, LICENSE NO. 25196 EXPIRATION DATE: 07-07-2011."

STATE OF MARYLAND — JOEL A. MANUEL — No. 25196 — PROFESSIONAL ENGINEER

MARYLAND TRANSPORTATION AUTHORITY
Engineering Division

ADDENDUMS & REVISIONS			
NO.	DESCRIPTION	BY	DATE

ACCESS CONTROL FENCING AT MAJOR BRIDGES
CHESAPEAKE BAY BRIDGE
ANNE ARUNDEL AND QUEEN ANNE'S COUNTIES
EAST SHORE EASTBOUND BRIDGE
FENCING PLAN AND ELEVATION

DESIGNED BY RHM	DRAWN BY JLH	CHECKED BY UPM
CONST. REVIEW BY	DATE DECEMBER 2008	SCALE AS NOTED

CONTRACT NO. MA-2278-000-002
DRAWING NO. ESF-05
SHEET NO. 18 OF 21

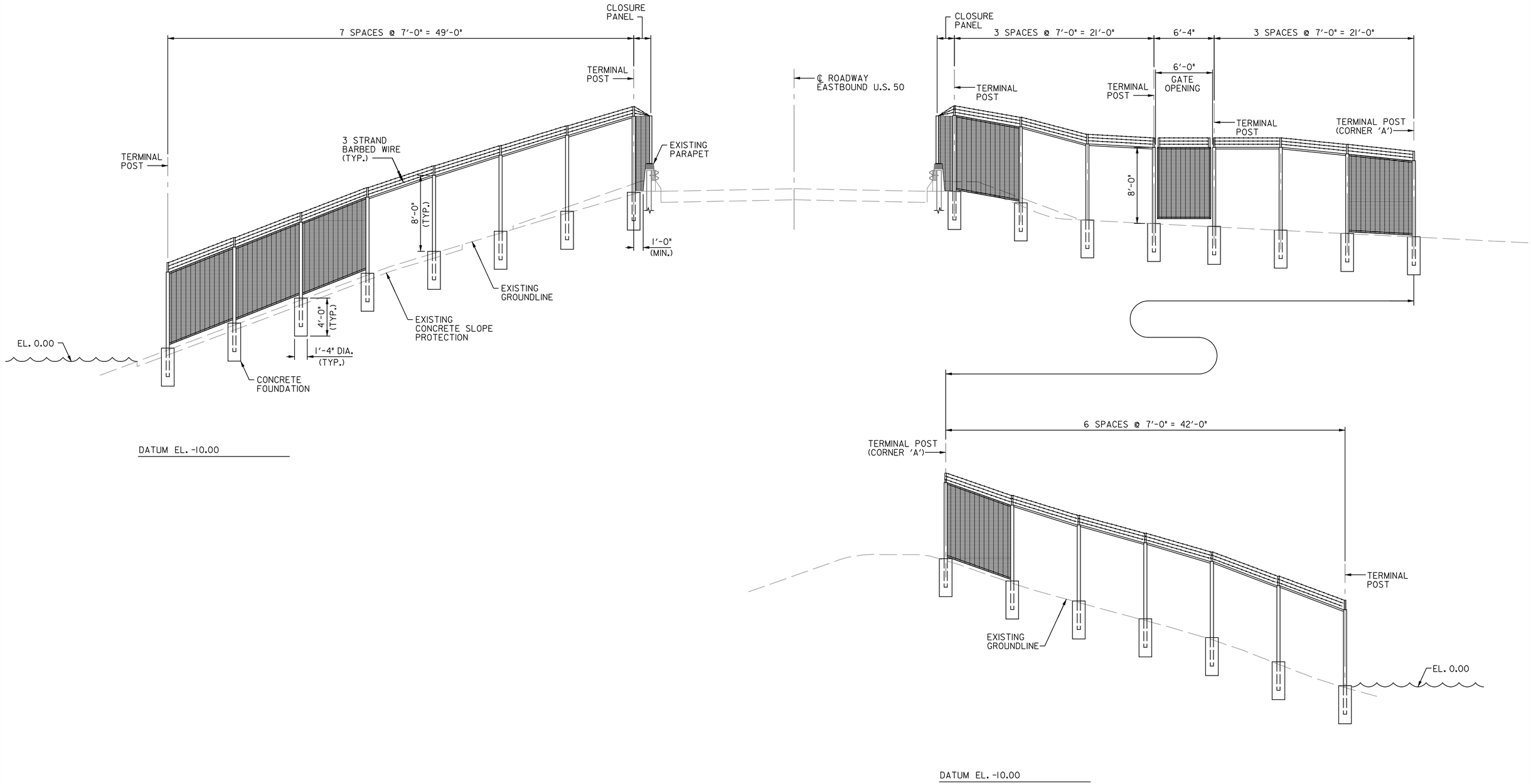

ELEVATION
SCALE: 1" = 5'-0"

PRIME
ENGINEERING & ARCHITECTURE, INC.
3106 LORD BALTIMORE DRIVE, SUITE 106
BALTIMORE, MARYLAND 21244
PH: (410) 265-1956; FAX (410) 265-1954

PROFESSIONAL CERTIFICATION

"I HEREBY CERTIFY THAT THESE DOCUMENTS WERE PREPARED OR APPROVED BY ME, AND THAT I AM A DULY LICENSED PROFESSIONAL ENGINEER UNDER THE LAWS OF THE STATE OF MARYLAND, LICENSE NO. 25196 EXPIRATION DATE: 07-07-2011."

STATE OF MARYLAND — PAUL H. MANUEL — No. 25196 — PROFESSIONAL ENGINEER

MARYLAND TRANSPORTATION AUTHORITY
Engineering Division

ADDENDUMS & REVISIONS			
NO.	DESCRIPTION	BY	DATE

ACCESS CONTROL FENCING AT MAJOR BRIDGES
CHESAPEAKE BAY BRIDGE
ANNE ARUNDEL AND QUEEN ANNE'S COUNTIES
EAST SHORE EASTBOUND BRIDGE
FENCING ELEVATION

DESIGNED BY RHM | DRAWN BY JLH | CHECKED BY UPM
CONST. REVIEW BY _____ | DATE DECEMBER 2008 | SCALE AS NOTED

CONTRACT NO. MA-2278-000-002
DRAWING NO. ESF-06
SHEET NO. 19 OF 21

GENERAL NOTES

Specifications: Latest SHA Specifications and Special Provisions for materials and construction. Latest AASHTO Standard Specifications for Highway Bridges for design.

Materials: Posts and rails shall conform to ASTM F-1083, Schedule 80. Fabric shall be 6 gauge, 2" PVC coated mesh conforming to 914.01.

All posts, braces, fittings and hardware shall be PVC coated. Coating shall conform to 914.03 except that nuts, bolts and washers shall also be PVC coated and touched up after installation.

All plates shall be steel conforming to ASTM A 709 Grade 36.

Anchor studs or anchor bolts shall conform to ASTM A 276, Type 430 or Type 304 stainless steel annealed, hot-finished, ultimate strength 70 000 psi min., 20% min. elongation. Threads may be rolled or cut.

Epoxy grout for anchor studs in cored holes shall conform to 902.11 (d).

PVC color for all elements of fence shall be black unless otherwise noted.

Construction: All longitudinal rails shall be parallel to top of parapet.

All posts shall be set normal to top of parapet for roadway grades 6% or less. For grades over 6% posts shall be set plumb.

The chain link fence shall be true to line, taut, tight fit to top of parapet, with 1/2" min. to 1" max. gap, and shall comply with the best practice for fence construction of this type.

Post and rails shall be permanently positioned before fabric is placed.

For post spacing see pertinent structure sheets.

Precoated longitudinal rails, if cut, shall have the cut end coated with PVC touch up material supplied by the manufacturer prior to erection.

If Contractor elects to place anchor studs after placing concrete parapet, newly placed rebars shall be located so that coring does not damage same, all holes shall be cored (not drilled) and the diameter of the cored holes for the anchor studs shall be 7/8".

Measurement and Payment: The furnishing, fabricating, erecting, etc., of all new chain link fence on the bridges, complete in place, will not be measured for payment but all costs thereof shall be included in the Contract lump sum prices for the pertinent Chain Link Safety Fence For Bridge items.

The furnishing, fabricating, erecting, etc., of all new chain link fence anti-climb shields, complete in place, will be measured and paid for at the Contract unit prices per each for the pertinent Chain Link Safety Fence Anti-Climb Shield items.

Any defects uncovered by the inspection of welds on base plates and poles shall be repaired or replaced by new members at no additional cost to the Administration.

APPROVAL: DIRECTOR, OFFICE OF BRIDGE DEVEL. DATE: 6/3/76
REVISIONS — SHA: 4-27-94, 11-17-97, 3-13-01, 7-24-01 | FHWA
FHWA APPROVAL DATE: 11-9-76

STATE OF MARYLAND
DEPARTMENT OF TRANSPORTATION
STATE HIGHWAY ADMINISTRATION
OFFICE OF BRIDGE DEVELOPMENT

CHAIN LINK SAFETY FENCE-NEW STRUCTURES
GENERAL NOTES

STANDARD NO. BR-SS(3.01)-75-21 SHEET 1 OF 1

SUPER-FENCING NEW STRUCT.

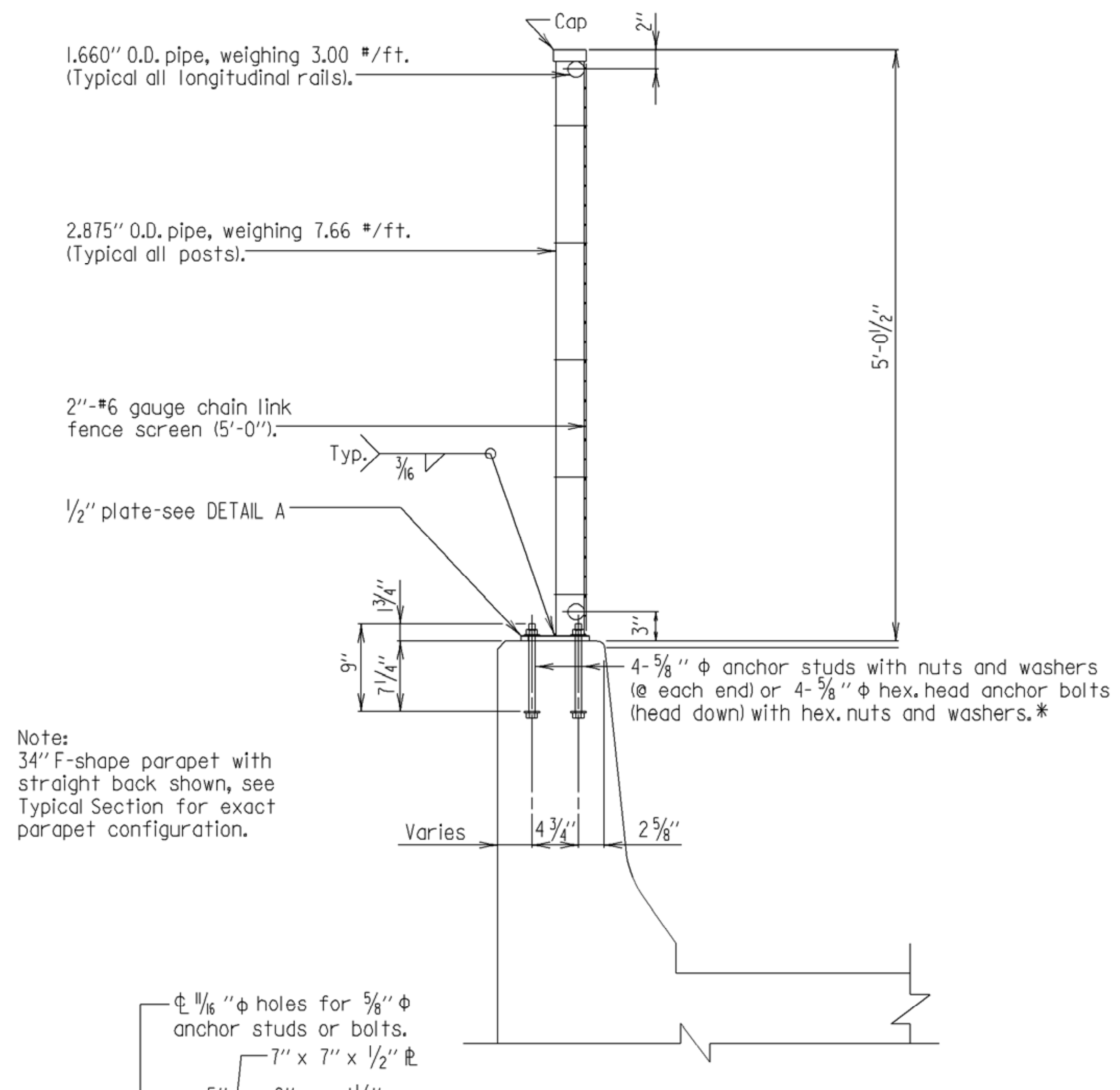

Note:
34" F-shape parapet with straight back shown, see Typical Section for exact parapet configuration.

TYPICAL SECTION
Scale: 3/4"=1'-0"

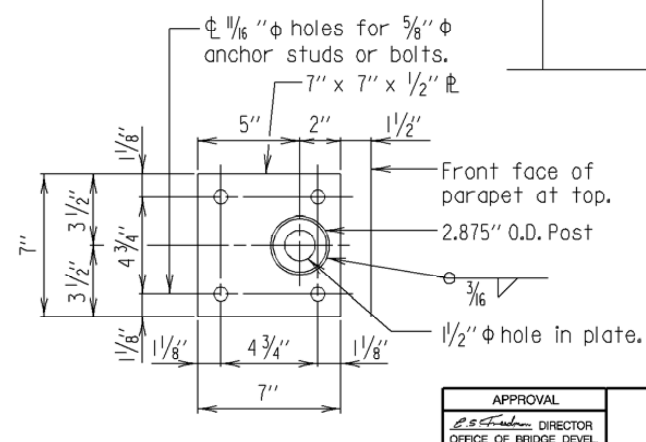

DETAIL A
Scale: 1 1/2"=1'-0"

* As an option, the Contractor may set the anchor studs after placing concrete barrier using 7/8" dia. cored holes and an approved epoxy grout. Nuts and washers shall be omitted from the embedded ends of anchor studs. No additional compensation will be allowed for this option.

APPROVAL: DIRECTOR, OFFICE OF BRIDGE DEVEL. DATE: 6/8/76
REVISIONS — SHA: 3-22-88, 11-17-97, 3-21-01, 6-1-05 | FHWA: 6-8-90
FHWA APPROVAL DATE: 11-9-76

STATE OF MARYLAND
DEPARTMENT OF TRANSPORTATION
STATE HIGHWAY ADMINISTRATION
OFFICE OF BRIDGE DEVELOPMENT

TYPE II CHAIN LINK SAFETY FENCE
FOR NEW STRUCTURES
WITH 34" OR 42" F-SHAPE PARAPET

STANDARD NO. BR-SS(3.03)-05-23 SHEET 1 OF 3

SUPER-FENCING NEW STRUCT.

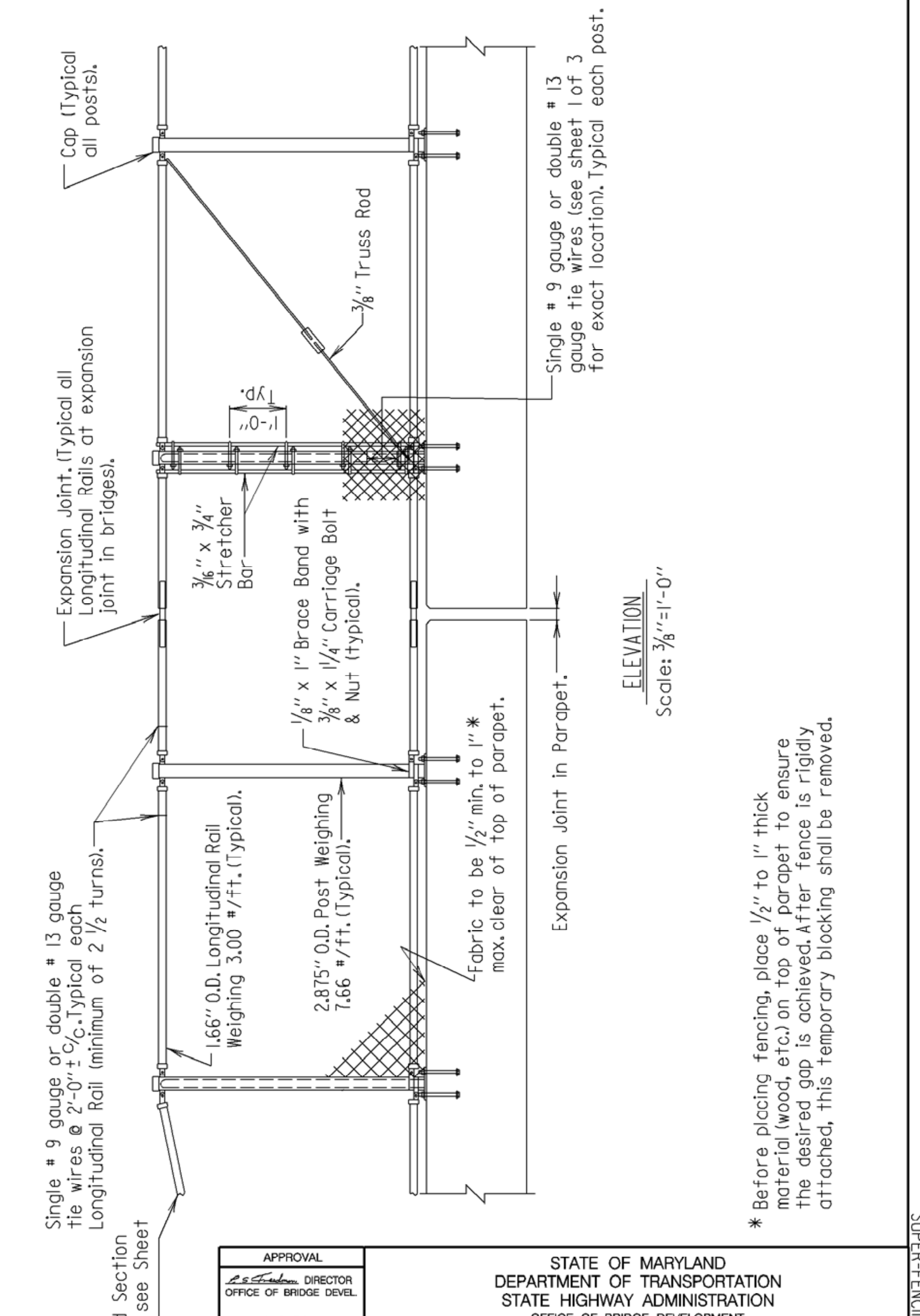

APPROVAL: DIRECTOR, OFFICE OF BRIDGE DEVEL. DATE: 6/8/76
REVISIONS — SHA: 3-22-88, 11-17-97, 3-21-01, 6-1-05 | FHWA: 6-8-90
FHWA APPROVAL DATE: 11-9-76

STATE OF MARYLAND
DEPARTMENT OF TRANSPORTATION
STATE HIGHWAY ADMINISTRATION
OFFICE OF BRIDGE DEVELOPMENT

TYPE II CHAIN LINK SAFETY FENCE
FOR NEW STRUCTURES
WITH 34" OR 42" F-SHAPE PARAPET

STANDARD NO. BR-SS(3.03)-05-23 SHEET 2 OF 3

SUPER-FENCING NEW STRUCT.

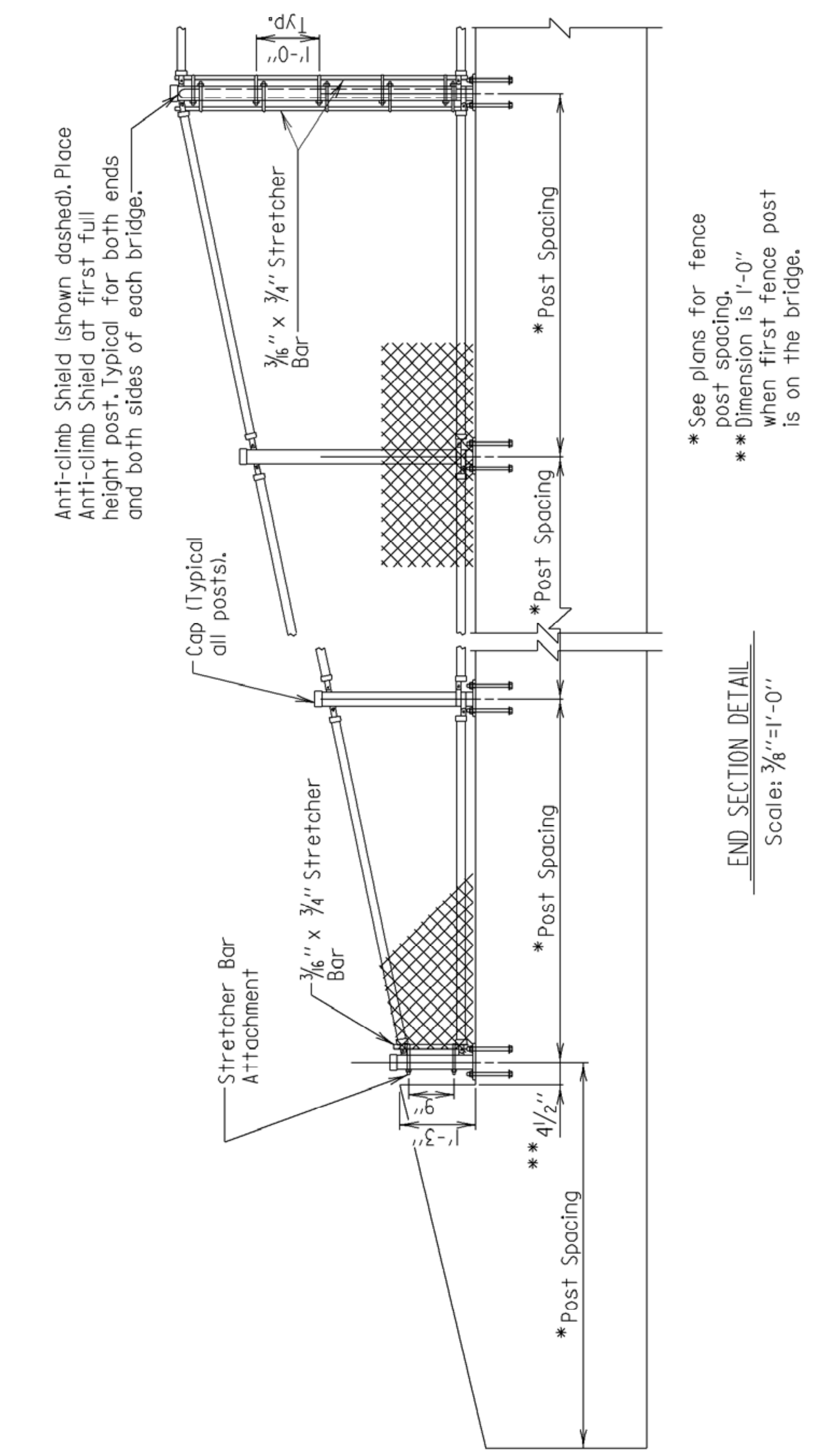

APPROVAL: DIRECTOR, OFFICE OF BRIDGE DEVEL. DATE: 6/19/89
REVISIONS — SHA: 11-17-97, 6-1-05 | FHWA
FHWA APPROVAL DATE: 6-8-90

STATE OF MARYLAND
DEPARTMENT OF TRANSPORTATION
STATE HIGHWAY ADMINISTRATION
OFFICE OF BRIDGE DEVELOPMENT

TYPE II CHAIN LINK SAFETY FENCE
FOR NEW STRUCTURES
WITH 34" OR 42" F-SHAPE PARAPET

STANDARD NO. BR-SS(3.03)-05-23 SHEET 3 OF 3

SUPER-FENCING NEW STRUCT.

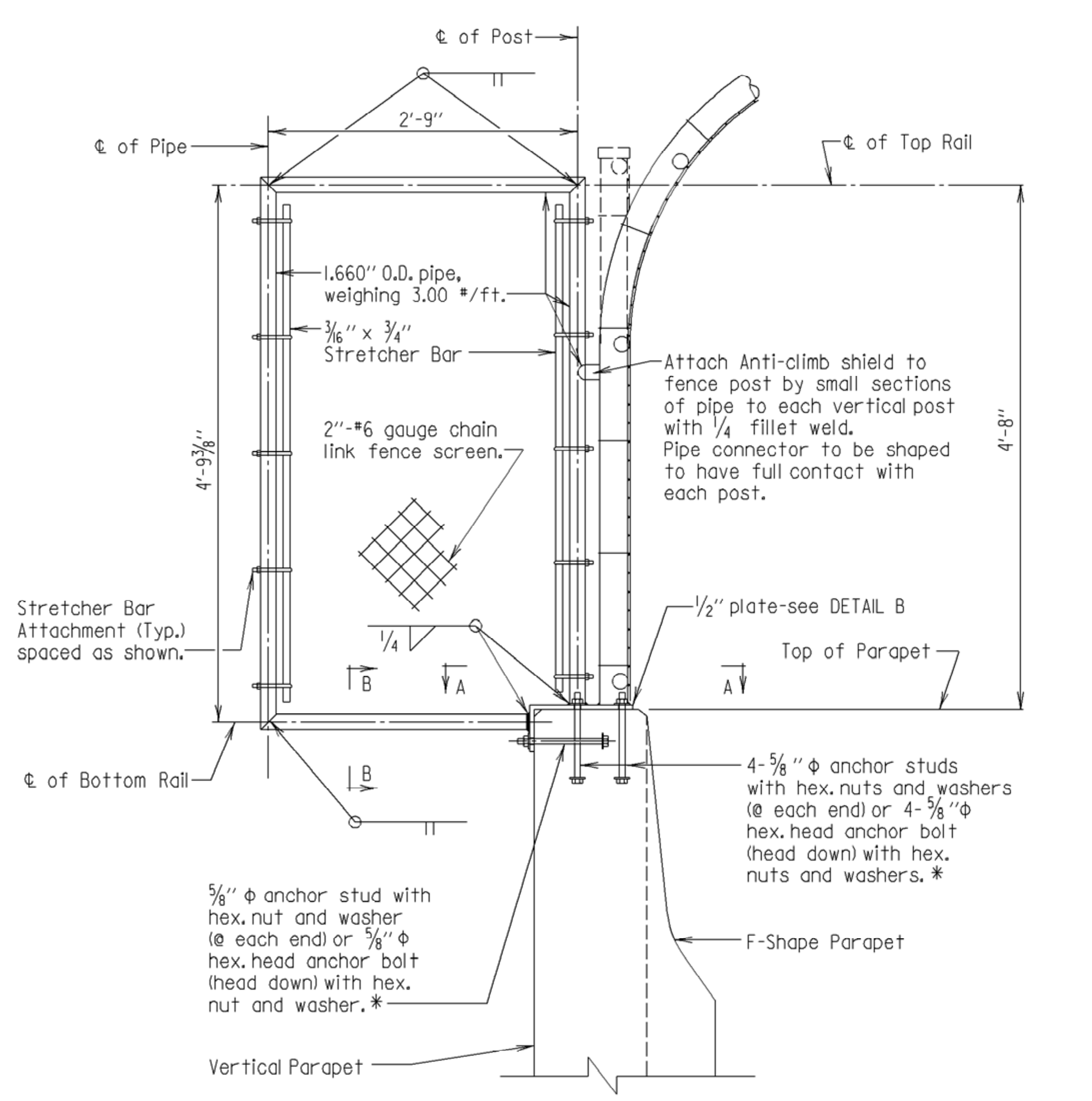

* As an option, the Contractor may set the anchor studs after placing concrete barrier using 7/8" dia. cored holes and an approved epoxy grout. Nuts and washers shall be omitted from the embedded ends of anchor studs. No additional compensation will be allowed for this option.

TYPICAL SECTION
Scale: 3/4"= 1'-0"

Note:
Straight back parapet shown, see Typical Section for exact configuration.

Note:
For Sections A-A and B-B see Sheet 2 of 2 of this standard.

APPROVAL: DIRECTOR, OFFICE OF BRIDGE DEVEL. DATE: 6/3/76
REVISIONS — SHA: 1-11-88, 3-13-01, 7-26-01, 9-2-03 | FHWA: 6-8-90
FHWA APPROVAL DATE: 10-3-80

STATE OF MARYLAND
DEPARTMENT OF TRANSPORTATION
STATE HIGHWAY ADMINISTRATION
OFFICE OF BRIDGE DEVELOPMENT

ANTI-CLIMB SHIELD FOR
CHAIN LINK SAFETY FENCES TYPES I AND II

STANDARD NO. BR-SS(3.05)-75-25 SHEET 1 OF 2

SUPER-FENCING NEW STRUCT.

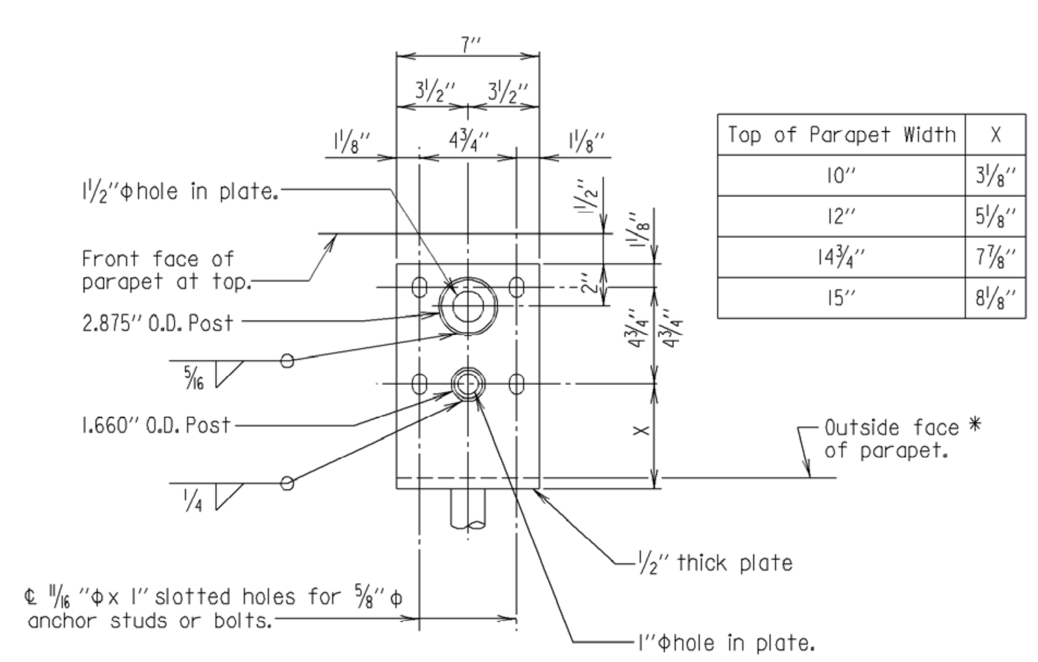

Top of Parapet Width	X
10"	3 1/8"
12"	5 1/8"
14 3/4"	7 7/8"
15"	8 1/8"

SECTION A-A
Scale: 1 1/2"= 1'-0"

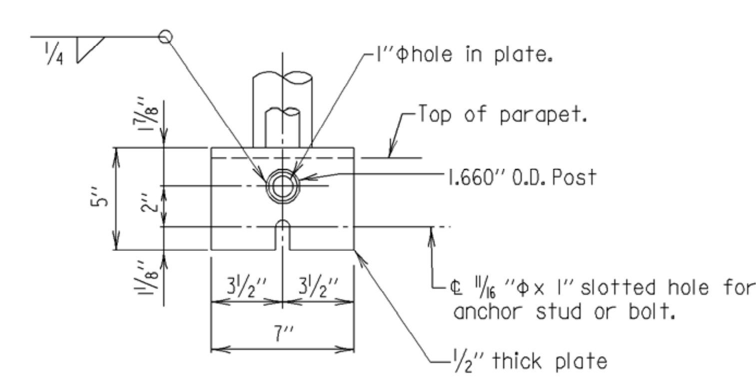

SECTION B-B
Scale: 1 1/2"= 1'-0"

* For Special Parapets outside face of parapet to be formed with a 8" wide recess, perpendicular to top of parapet, to accept anti-climb shield base plate. Recess to be 5" long measured from top of parapet.

APPROVAL: DIRECTOR, OFFICE OF BRIDGE DEVEL. DATE: 6/3/76
REVISIONS — SHA: 8-3-84, 1-11-88, 3-21-01 | FHWA: 11-8-84, 6-8-90
FHWA APPROVAL DATE: 10-3-80

STATE OF MARYLAND
DEPARTMENT OF TRANSPORTATION
STATE HIGHWAY ADMINISTRATION
OFFICE OF BRIDGE DEVELOPMENT

ANTI-CLIMB SHIELD FOR
CHAIN LINK SAFETY FENCES TYPES I AND II

STANDARD NO. BR-SS(3.05)-75-25 SHEET 2 OF 2

SUPER-FENCING NEW STRUCT.

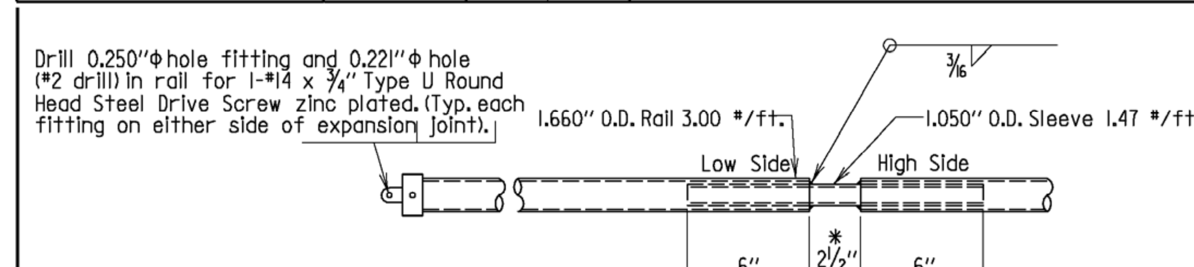

EXPANSION JOINT DETAILS
Scale: 1 1/2"= 1'-0"

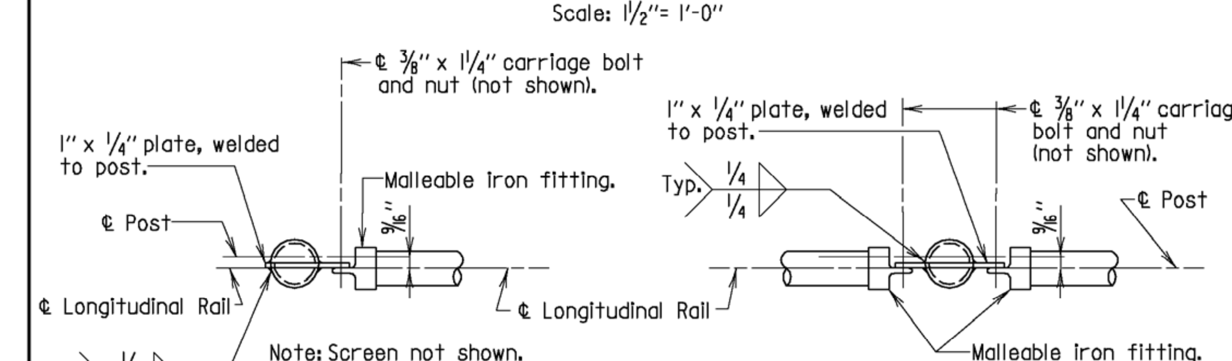

TOP LONGITUDINAL RAIL - POST ATTACHMENT
Scale: 1 1/2"= 1'-0"

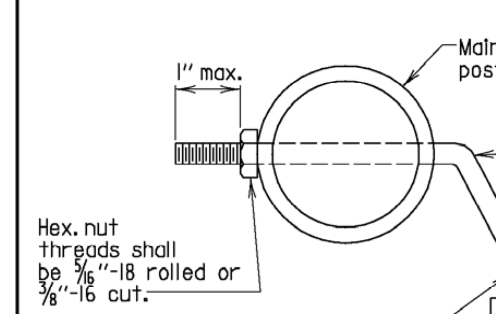

STRETCHER BAR ATTACHMENT
Scale: None

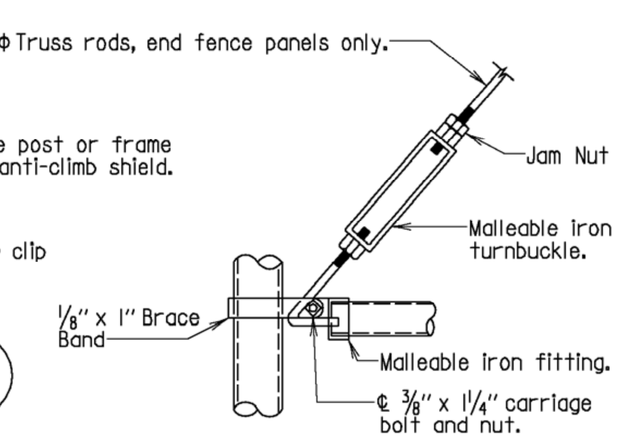

TRUSS ROD ATTACHMENT
Scale: 1 1/2"= 1'-0"

* If opening in parapet is 2 1/2" or less. If opening is greater then this, dimension shall be increased to match proposed movement.

APPROVAL: DIRECTOR, OFFICE OF BRIDGE DEVEL. DATE: 6/3/76
REVISIONS — SHA: 8-4-87, 1-22-01 | FHWA: 6-8-90
FHWA APPROVAL DATE: 11-9-76

STATE OF MARYLAND
DEPARTMENT OF TRANSPORTATION
STATE HIGHWAY ADMINISTRATION
OFFICE OF BRIDGE DEVELOPMENT

CHAIN LINK SAFETY FENCE - NEW STRUCTURES
MISCELLANEOUS DETAILS

STANDARD NO. BR-SS(3.04)-75-24 SHEET 1 OF 1

SUPER-FENCING NEW STRUCT.

MARYLAND TRANSPORTATION AUTHORITY
Engineering Division

ACCESS CONTROL FENCING AT MAJOR BRIDGES

THOMAS J. HATEM, FRANCIS SCOTT KEY, HARRY W. NICE BRIDGE
HARFORD, CECIL, BALTIMORE CITY/COUNTY ANNE ARUNDEL AND CHARLES COUNTY

STANDARD DRAWINGS 1

DESIGNED BY	DRAWN BY KMG	CHECKED BY
CONST. REVIEW BY	DATE DEC 2008	SCALE AS NOTED

ADDENDUMS & REVISIONS

NO.	DESCRIPTION	BY	DATE

CONTRACT NO. MA-2278-000-002
DRAWING NO. STD–01
SHEET NO. 20 OF 21

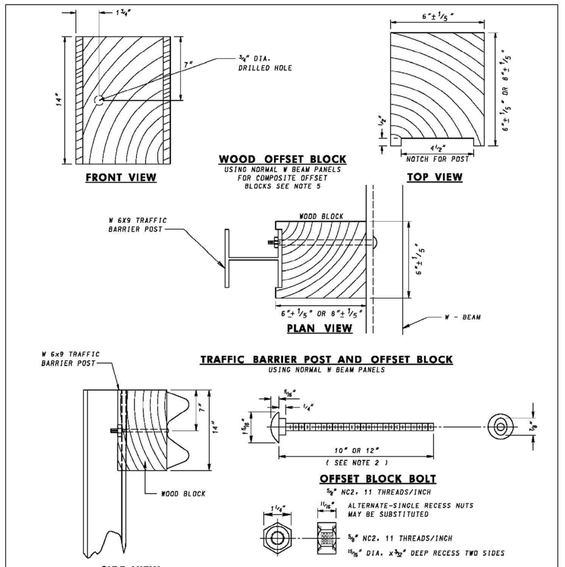

WOOD OFFSET BLOCK
USING NORMAL W BEAM PANELS FOR COMPOSITE OFFSET BLOCKS SEE NOTE 5

TRAFFIC BARRIER POST AND OFFSET BLOCK
USING NORMAL W BEAM PANELS

NOTES

1. WOOD OFFSET BLOCKS 6x6x14 INCHES TO BE USED ON ALL NEW CONSTRUCTION AND WHEN THE EXISTING TRAFFIC BARRIER WITH METAL OFFSET BLOCKS IS TO BE REMOVED AND RESET.
2. THE CONTRACTOR HAS THE OPTION TO USE SHORTER BOLTS WITH A MINIMUM OF ½" PROTRUSION BEYOND NUT.
3. WOOD BLOCKS FOR THRIE BEAM PANELS SHALL BE 8x6x22½ INCHES AND NOTCHED AS SHOWN IN THE TOP VIEW. TWO BOLTS ARE REQUIRED FOR ATTACHMENT TO THE POSTS.
4. THE 6x6x14 INCH WOOD OFFSET BLOCKS ARE TO BE USED FOR REPAIR WORK ONLY.
5. WHEN DIRECTED BY THE ENGINEER OR WHEN SPECIFIED IN THE CONTRACT DOCUMENTS, COMPOSITE OFFSET BLOCKS THAT ARE APPROVED BY THE ADMINISTRATION CAN BE USED IN LIEU OF THE WOOD BLOCKS. FOR THE APPROVED SUBSTITUTES LIST SEE SHEET 1 OF 1 APPROVED SUBSTITUTES FOR WOOD OFFSET BLOCKS.

SPECIFICATION 605	CATEGORY CODE ITEMS	Maryland Department of Transportation STATE HIGHWAY ADMINISTRATION STANDARDS FOR HIGHWAYS AND INCIDENTAL STRUCTURES
APPROVED Kirk G. McCall, DIRECTOR - OFFICE OF HIGHWAY DEVELOPMENT		
SHA State Highway Administration	APPROVAL • SHA REVISIONS: APPROVAL 11-10-99, REVISED 3-15-06	APPROVAL • FEDERAL HIGHWAY ADMINISTRATION: APPROVAL 7-2-99, REVISED 4-5-06

TRAFFIC BARRIER W BEAM WITH WOOD OFFSET BLOCK

STANDARD NO. MD 605.21

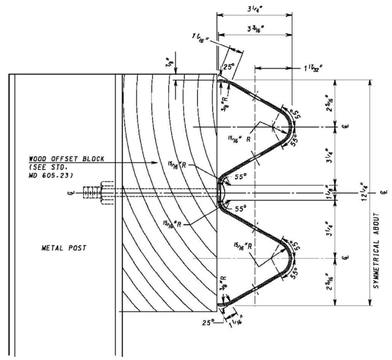

W BEAM DETAIL
(MATERIAL: 12 GA. STEEL)

NOTES

1. RAIL ELEMENTS ARE FURNISHED SHOP CURVED, CONCAVE OR CONVEX TO RADII BETWEEN 20 FT. & 150 FT.
2. BARRIER SECTIONS SHALL BE 12'-6" OR 25'-0" LENGTHS.
3. FOR COMPOSITE OFFSET BLOCKS SEE NOTE 5 ON MD 605.21

SPECIFICATION 605	CATEGORY CODE ITEMS	Maryland Department of Transportation STATE HIGHWAY ADMINISTRATION STANDARDS FOR HIGHWAYS AND INCIDENTAL STRUCTURES
APPROVED Kirk G. McCall, DIRECTOR - OFFICE OF HIGHWAY DEVELOPMENT		
SHA State Highway Administration	APPROVAL • SHA REVISIONS: APPROVAL 3-24-69, REVISED 3-15-06	APPROVAL • FEDERAL HIGHWAY ADMINISTRATION: APPROVAL 3-4-69, REVISED 4-5-06

TRAFFIC BARRIER W BEAM SINGLE FACE

STANDARD NO. MD 605.22

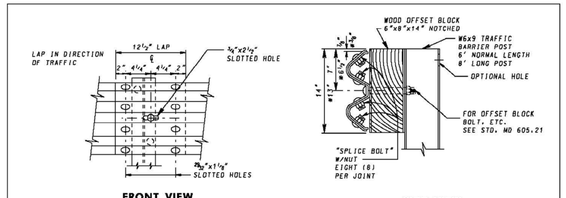

TRAFFIC BARRIER W BEAM SPLICE JOINT

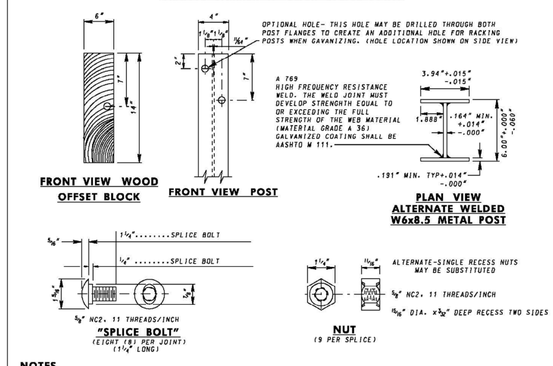

NOTES

1. EXCEPT FOR THE DIMENSIONS SHOWN ON THE ALTERNATE WELDED W6x8.5 PLAN VIEW, ALL DIMENSIONS FOR HOLES, HOLE SPACING, LENGTHS, ETC. WILL REMAIN THE SAME AS THEY ARE FOR THE W6x9 POSTS AND WOOD OFFSET BLOCKS.
2. FOR COMPOSITE OFFSET BLOCKS SEE NOTE 5 ON MD 605.21
3. POSTS SHALL BE SPACED 6'-3" C/C, UNLESS OTHERWISE STATED ON THE PLANS OR DIRECTED BY THE ENGINEER.

SPECIFICATION 605	CATEGORY CODE ITEMS	Maryland Department of Transportation STATE HIGHWAY ADMINISTRATION STANDARDS FOR HIGHWAYS AND INCIDENTAL STRUCTURES
APPROVED Kirk G. McCall, DIRECTOR - OFFICE OF HIGHWAY DEVELOPMENT		
SHA State Highway Administration	APPROVAL • SHA REVISIONS: APPROVAL 5-6-76, REVISED 3-29-07	APPROVAL • FEDERAL HIGHWAY ADMINISTRATION: APPROVAL 9-30-76, REVISED 10-25-06

TRAFFIC BARRIER W BEAM METAL POST, W BEAM SPLICE AND WOOD OFFSET BLOCK

STANDARD NO. MD 605.23

1 OF 2

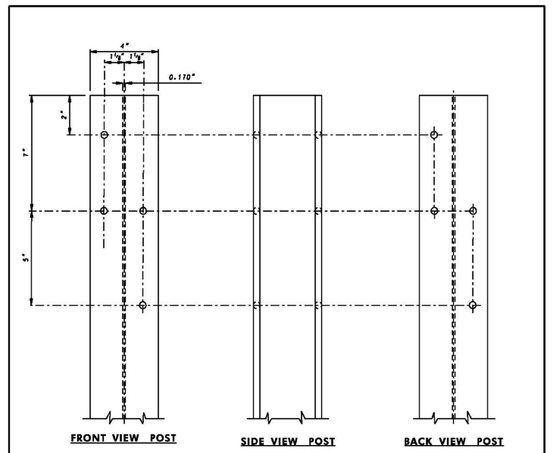

NOTE

1. SPLICING DETAILS FOR TRAFFIC BARRIER W BEAM THE SAME AS SHOWN ON STD. MD. 605.23

SPECIFICATION	CATEGORY CODE ITEMS	Maryland Department of Transportation STATE HIGHWAY ADMINISTRATION STANDARDS FOR HIGHWAYS AND INCIDENTAL STRUCTURES
APPROVED Kirk G. McCall, DIRECTOR - OFFICE OF HIGHWAY DEVELOPMENT		
SHA State Highway Administration	APPROVAL • SHA REVISIONS: APPROVAL 11-10-99, REVISED 10-1-01	APPROVAL • FEDERAL HIGHWAY ADMINISTRATION: APPROVAL 7-2-99, REVISED

TRAFFIC BARRIER W BEAM METAL POST ADAPTABLE TO 8"x 6"x 14" WOOD OFFSET BLOCK

STANDARD NO. 605.23-01

2 OF 2

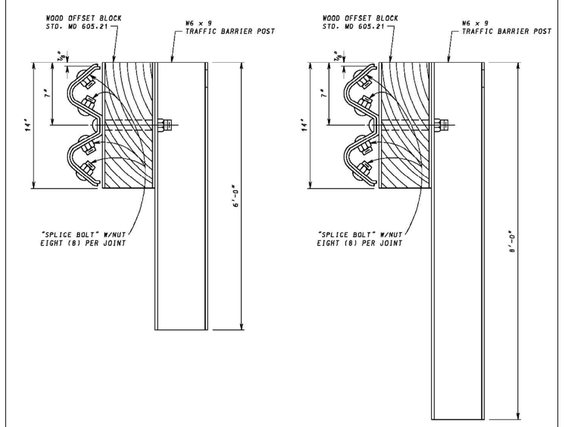

POST DETAIL

NOTE

1. FOR METAL POSTS, WOOD OFFSET BLOCKS, SPLICES, SPLICE BOLTS AND OTHER DETAILS SEE STANDARD MD 605.23.
2. FOR TRAFFIC BARRIER W BEAM SEE STANDARD MD 605.22.
3. FOR COMPOSITE OFFSET BLOCKS SEE NOTE 5 ON MD 605.21
4. POSTS SHALL BE SPACED 6'-3" C/C, UNLESS OTHERWISE STATED ON THE PLANS OR DIRECTED BY THE ENGINEER.

SPECIFICATION 605	CATEGORY CODE ITEMS	Maryland Department of Transportation STATE HIGHWAY ADMINISTRATION STANDARDS FOR HIGHWAYS AND INCIDENTAL STRUCTURES
APPROVED Kirk G. McCall, DIRECTOR - OFFICE OF HIGHWAY DEVELOPMENT		
SHA State Highway Administration	APPROVAL • SHA REVISIONS: APPROVAL 11-08-06, REVISED	APPROVAL • FEDERAL HIGHWAY ADMINISTRATION: APPROVAL 10-25-06, REVISED

TRAFFIC BARRIER W BEAM WITH WOOD OFFSET BLOCK USING 6 FOOT OR 8 FOOT POSTS

STANDARD NO. MD 605.25

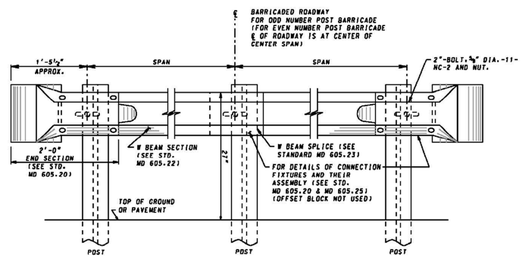

MINIMUM NUMBER OF SPANS = 2
MINIMUM NUMBER OF POSTS = 3
MAXIMUM SPAN: 12'-6"
LENGTH OF BARRICADE NOTED ON PLANS: CENTER TO CENTER OF END POSTS
ALL SPANS TO BE EQUAL LENGTH.
NO. OF POSTS TO BE NOTED ON PLANS.
ALL POSTS W6x9, 6'-0" LONG
(SEE STD. MD 605.10)

NOTE

TRAFFIC BARRIER W BEAM BARRICADE SHALL BE PAID FOR AT THE CONTRACT UNIT PRICE PER LINEAR FOOT. THE CONTRACT PRICE BID SHALL INCLUDE THE FURNISHING AND INSTALLATION OF ALL POSTS, W BEAM, POST AND SPLICE BOLTS WITH NUTS, END SECTIONS, GALVANIZING, THE COST OF ALL EXCAVATION, BACKFILLING AND TAMPING INCIDENTAL TO SETTING THE POSTS, OR THE COST OF DRIVING THE POSTS, THE COST OF THE REMOVAL OF EXISTING PAVEMENT WHERE NECESSARY, AS WELL AS THE COST OF ALL LABOR, APPROVED TOOLS AND EQUIPMENT INCIDENTAL TO FURNISHING AND INSTALLING THE BARRICADE AT LOCATIONS NOTED ON THE PLANS OR WHERE DIRECTED BY THE ENGINEER. FOR MATERIAL, SEE LATEST S.H.A. SPECIFICATIONS FOR TRAFFIC BARRIER W BEAM.

SPECIFICATION 605	CATEGORY CODE ITEMS	Maryland Department of Transportation STATE HIGHWAY ADMINISTRATION STANDARDS FOR HIGHWAYS AND INCIDENTAL STRUCTURES
APPROVED Kirk G. McCall, DIRECTOR - OFFICE OF HIGHWAY DEVELOPMENT		
SHA State Highway Administration	APPROVAL • SHA REVISIONS: APPROVAL 3-31-81, REVISED 10-1-01	APPROVAL • FEDERAL HIGHWAY ADMINISTRATION: APPROVAL 7-7-70, REVISED 7-2-99

TRAFFIC BARRIER W BEAM BARRICADE

STANDARD NO. MD 605.27

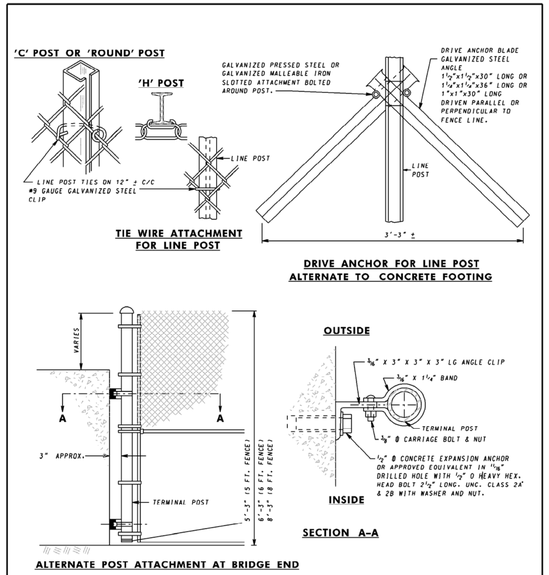

SPECIFICATION	CATEGORY CODE ITEMS	Maryland Department of Transportation STATE HIGHWAY ADMINISTRATION STANDARDS FOR HIGHWAYS AND INCIDENTAL STRUCTURES
APPROVED Kirk G. McCall, DIRECTOR - OFFICE OF HIGHWAY DEVELOPMENT		
SHA State Highway Administration	APPROVAL • SHA REVISIONS: APPROVAL 1-10-70, REVISED 10-1-01	APPROVAL • FEDERAL HIGHWAY ADMINISTRATION: APPROVAL 9-14-71, REVISED 4-23-85

CHAIN LINK FENCE DRIVE ANCHOR & POST ATTACHMENT AT BRIDGE

STANDARD NO. MD 690.21

MARYLAND TRANSPORTATION AUTHORITY
Engineering Division

ACCESS CONTROL FENCING AT MAJOR BRIDGES

THOMAS J. HATEM, FRANCIS SCOTT KEY, HARRY W. NICE BRIDGE
HARFORD, CECIL, BALTIMORE CITY/COUNTY ANNE ARUNDEL AND CHARLES COUNTY

STANDARD DRAWINGS II

DESIGNED BY	DRAWN BY KMG	CHECKED BY
CONST. REVIEW BY	DATE DEC 2008	SCALE AS NOTED

ADDENDUMS & REVISIONS

NO.	DESCRIPTION	BY	DATE

CONTRACT NO. MA-2278-000-002
DRAWING NO. STD-02
SHEET NO. 21 OF 21