Maryland
Transportation
Authority

Martin O'Malley
Governor

Anthony Brown
Lt. Governor

Beverley K Swain-Staley
Chairman

Peter J. Basso
Rev. Dr. William C. Calhoun, Sr.
Mary Beyer Halsey
Louise P. Hoblitzell
Richard C. Mike Lewin
Michael J. Whitson
Walter E. Woodford, Jr., P.E.

Harold M. Bartlett
Acting Executive Secretary

Division of Procurement and
Statutory Program Compliance
2310 Broening Highway
Suite 160
Baltimore MD 21224
410-537-6769
410-537-1044 (fax)
410-355-7024 (TTY)
1-888-713-1596

e-mail: mdta@
mdta.maryland.gov

www.mdta.maryland.gov

August 27, 2010

TO ALL PURCHASERS OF CONTRACT DOCUMENTS:

RE: Contract No. MA-679-000-002
Upgrade and Replace Existing Signing – Northern Region

ADDENDUM NO. 8

Ladies and Gentlemen:

It is important that you acknowledge receipt of this Addendum No. 8 on the referenced contract regardless if you will be bidding or not bidding.

Very truly yours,

Sandra Clifford
Chief of Engineering & Construction Procurement

SC/mdj

Enclosures

Contract No. **MA-679-000-002**

This will acknowledge receipt of the attached Addendum No. 8.

_____
NAME OF COMPANY

_____ _____
SIGNATURE DATE

THIS SIGNED ADDENDUM ACKNOWLEDGEMENT PAGE SHALL BE RETURNED TO THIS OFFICE VIA **FAX AT 410-537-7801 or 7803,** ATTENTION: MAGGIE JOHNSON PRIOR TO THE BID OPENING DATE.

IN ADDITION, THIS SIGNED ADDENDUM ACKNOWLEDGEMENT PAGE MUST BE ATTACHED TO THE OUTSIDE COVER OF THE BID BOOK. FAILURE TO DO SO MAY RESULT IN REJECTION OF YOUR BID.

Maryland Transportation Authority

Martin O'Malley
Governor

Anthony Brown
Lt. Governor

Beverly K Swaim-Staley
Chairman

Peter J. Basso
Rev. Dr. William C. Calhoun, Sr.
Mary Beyer Halsey
Louise P. Hoblitzell
Richard C. Mike Lewin
Michael J. Whitson
Walter E. Woodford, Jr., P.E.

Harold M. Bartlett
Acting Executive Secretary

Division of Procurement and
Statutory Program Compliance
2310 Broening Highway
Suite 160
Baltimore MD 21224
410-537-6769
410-537-1044 (fax)
410-355-7024 (TTY)
1-888-713-1596

410-355-7024 (TTY)
1-888-754-0098

e-mail: mdta@
mdta.maryland.gov

www.mdta.maryland.gov

August 27, 2010

TO ALL PURCHASERS OF CONTRACT DOCUMENTS

ADDENDUM NO. 8

RE: Contract No. MA-679-000-002
Upgrade and Replace Existing Signing – Northern Region

To Whom It May Concern:

I. The bids are now due at 12 noon on September 16, 2010.

II. The following changes have been made to the Invitation for Bids book:
   a. Delete Pages iii, 1, 85, 120, 128, 134, 146, 147 and 169, and replace them with the attached pages numbered the same with Addendum No. 8 notation.
   b. Insert new Pages 60C thru 60E attached herein, with Addendum No. 8 notation.

III. The following changes have been made to the contract plans:
   a. Delete Sheets 1, 119, 123, 125, and 156 thru 169, and replace them with the attached sheets numbered the same with Addendum No. 8 notation.

IV. Attached herein, are the minutes of the second pre-bid meeting held on August 19th, 2010

Very truly yours,

Sandra Clifford
Chief of Engineering & Construction Procurement

SRC/RYM/upm/mdj

THIS ADDENDUM SIGNED ACKNOWLEDGEMENT PAGE MUST BE ATTACHED TO THE OUTSIDE COVER OF THE BID BOOK. FAILURE TO DO SO MAY RESULT IN REJECTION OF YOUR BID.

THE ATTACHED SIGNED ADDENDUM ACKNOWLEDGEMENT PAGE SHALL BE RETURNED TO THIS OFFICE VIA FAX AT **410-537-7801 or 7803,** ATTENTION: MAGGIE JOHNSON, PRIOR TO THE BID OPENING DATE.

Section 800-8 Sign Structure Identification Number Label....60
Section 800-9 Contingent Rock Excavation....60A-60B
Section 800-10 LED Sign Luminaires....60C-60E
Section 803 Overhead Sign Structures....61
Section 806 Luminaires and Lamps....61A-61C
Section 809 Trenching and Backfilling....62-63
Section 820 General Electrical Work and Testing....63A-63H
Section 822 Remove and Relocate Existing Signs and Sign Structures....64
Section 830 Common Work Results for Electrical....65
Section 832 Electrical Identification....66
Section 902 Portland Cement Concrete and Related Products....67-81
Section 908 Reinforcement Steel....82
Section 950.03 Reflectorization of Signs and Channelizing Devices....83
Section 950.06 Electrical Cable and Wire....84
Section 951.04 Removable Preformed Pavement Marking Material....86-88

Wage Rates....89-96

Contractor Affirmative Action Program....97-113

Affirmative Action Requirements Utilization of Minority Business Enterprises for Straight State Contracts....114-119

Proposal Form....120

Schedule of Prices....121-147

Contract Time and Bonding....148

Buy American Steel Act....149-151

Exhibit to Solicitation State of Maryland - Maryland Transportation Authority Minority Business Enterprise Participation....152-162

Bid/Proposal Affidavit....163-173

Escrow Account For Retained Funds....174

CONTRACT NO.:	**MA 679-000-002**
TITLE:	Upgrade and Replace Existing Signing – Northern Region
FACILITY:	John F. Kennedy Memorial Highway and Thomas J. Hatem Memorial Bridge
LOCATION:	Baltimore County, Maryland; Harford County, Maryland; Cecil County; Maryland and New Castle County, Delaware
ADVERTISED:	March 23, 2010
PRE-BID MEETING:	**9:30 am on April 7, 2010** in the Conference Room at the Maryland Transportation Authority, 303 Authority Drive, 1st Floor, Administration Building, Baltimore, MD 21222 A 2nd pre-bid meeting at 8:30 am on August 19, 2010 in the Conference Room Maryland Transportation Authority, 300 Authority Drive, 2nd Floor, Engineering Building, Baltimore, MD 21222
PROJECT CONTACT:	Project Manager: Ms. Roxane Y. Mukai at (410) 537-7848 Contract Administration: Ms. Maggie Johnson (410) 537-7807
BIDS DUE:	**12:00 Noon on September 16, 2010**, in the Bid Box on the 1st floor of the Maryland Transportation Authority, Engineering Building, 300 Authority Drive, Baltimore, MD 21222
CLASSIFICATION:	Class F ($ 5,000,001 – $ 10,000,000)
CONTRACT TIME:	Five Hundred and Forty (540) Calendar Days
LIQUIDATED DAMAGES:	**$ 800.00 per Calendar Day**
MINIMUM MBE GOALS:	Overall 25 % Women owned businesses 0% African-American owned businesses 0%
BID DOCUMENTS:	$60.00 - Bid documents can be purchased between 7:30am and 3:30pm, Mondays, Wednesdays, Thursdays and Fridays and between 10:00am and 4:00pm on Tuesdays at the Ticket Office located at the Francis Scott Key Bridge, Maryland Transportation Authority, Administration Building, 303 Authority Drive, Baltimore, MD 21222.

CATEGORY 800
TRAFFIC

800-10 LED SIGN LUMINAIRES

800-10.01 DESCRIPTION. Furnish and install LED Sign Luminaires as specified in the contract documents or as directed by the Engineer.

The contract documents currently direct the contractor to furnish and install ICELS 150 Watt Wide/Narrow Lamps and Luminaires. All references to ICELS sign luminaires shall be construed to mean LED Sign Luminaires. The spacing of the luminaires shall remain the same. The photometric submission shall detail the use of the spacing in the contract documents.

800-10.02 MATERIALS.

Sign luminaire shall have a color temperature of 3900 degrees Kelvin or higher with a high CRI. Color performance shall be determined following ANSI C78.377.

Each sign luminaire shall be designed for a service life of at least 12 years with 50,000 hours of operation based on 11.5 hours on and 12.5 hours off duty cycle each day.

Sign luminaires shall have a lumen retention of 70 per cent or greater at the end of service life. Light System life shall be calculated in accordance with IESNA LM-80. Expected life shall be based on 25°C average ambient temperature. Life expectancy at 10°C average nighttime ambient temperature shall be higher than the 25°C average; and may also be provided as informational.

All components of the luminaire must be rated for the full service life without maintenance. This includes housing, power supply (driver), lens, heat sink, and all other parts and materials.

Sign luminaires shall use no more than 135 watts and be designed to operate at the voltage specified in the contract documents. For 480 volt operation, an integral transformer may be provided to reduce the voltage. The power factor of the sign luminaire must be 0.9 or higher. The driver system shall be rated for at least 50,000 hours service life. MTBF shall be 50,000 hours or more. Units shall be provided with integral surge suppression protection that complies with the recommendations of ANSI C62.41. Power supply safety shall conform to ANSI C82.SSL1

All components of the Sign Luminaire shall be UL approved, and the luminaire shall be UL listed, or in the process of obtaining UL approval. UL listing must be obtained prior to installation.

The sign luminaire shall be designed to mount on a standard mounting plate as detailed in the

Maryland State Highway book of standards, and on the standard carriage of a Lumitrak sign lighting system. The completed luminaire assembly shall not require any periodic preventive maintenance throughout its life expectancy.

The sign luminaire housing and lens/refractor shall be sealed to prevent intrusion of moisture for the full service life. The completed assembly shall be rated IP65 according to IEC 60529 specification.

The Lens/refractor must be constructed of a material that will not show visible yellowing due to UV exposure, or exposure to hydrocarbon emission, for the full service life (12 years). UV exposure shall be rated assuming clear skies, 12 hours per day sun exposure, over the 12 year service life for any materials exposed to exterior lighting sources. The lens material shall be a poly methacrylate (PMMA) and warranted not to exceed 3% transmission loss over ten years of exposure. The lens material shall meet SAE J576.

The entire assembly shall be vibration rated at all tilt angles. At minimum the light fixture shall be tested and rated to meet ANSI C136.31 for vibration.

All testing must be performed by an independent laboratory.

800-10.03 SUBMITTALS

Submittals shall include but not be limited to:

(a) Provide luminaire photometric reports per IESNA LM-79-08 including laboratory name, report numbers, date, luminaire manufacturer and luminaire catalog number. Report must identify test standard and methods of test. Report must show T=0 and T=6000 hour results and the percent lumen output change and percent input power change.
(b) Provide LM-80-08 test data for the LED's at three temperatures. Provide extrapolation data to show output at 50,000 hours.
(c) Provide vibration test results including laboratory name, report numbers, date, luminaire manufacturer and luminaire catalog number. Report must identify test standard and methods of test.
(d) Provide lens material data sheets and warranty information.
(e) Provide written warranty.
(f) Catalog cut of fixture and all associated parts. Cut sheet should list compliance with all standards listed in the specification above.
(g) Photometric calculations for each sign type (size) in the project.
(h) Any other data requested by the Engineer to evaluate the suitability, life expectancy, performance and compatibility of the luminaire.
(i) Shop drawing of mounting detail coordinated with sign structure details in the project.

800-10.04 WARRANTY. Provide a written five year warranty that shall cover materials only. The luminaire shall be warranted against lumen depreciation beyond the L70 limits after 50,000 hours of use during the 5 year warranty. The luminaire shall be warranted for defective or non-starting LED source assemblies. The luminaire shall be warranted for replacement of any driver or power supply failure. The finish and materials shall be warranted against blistering, cracking, peeling, chalking, or fading, or yellowing or other UV related damage. The IP65 rating shall be warranted for the full five years.

800-10.05 CONSTRUCTION. Photometric calculations shall be provided with the catalog cuts for the sign luminaire verifying the sign illumination for a typical sign 14 foot wide and 14 foot high. For the calculations, three luminaires shall be used. These will be placed with the first luminaire two foot from the left edge of the sign, the second 7 foot from the left edge, and the third 12 foot from the left edge. Each luminaires light center shall be 6 foot out from the sign base, and 3 ft below the lower edge of the sign. Calculations shall be provided for a grid with vertical and horizontal spacing of 1 foot. The bottom of the grid will be 0.5 foot above the bottom edge of the sign and left edge 0.5 foot from the left side. In addition calculations for all sign sizes in the contract shall be provided with the catalog cuts as specified above.

To be acceptable, the average initial illumination shall be between 20 and 40 foot candles with a maximum to minimum uniformity ration no greater then 6 to 1. Photometric data shall utilize photometric reports in accordance with IESNA LM-79. Final illumination at the end of service life shall be 20 foot candles or greater.

The engineer may waive the photometric calculations for sign luminaires that have been previously installed and demonstrated their acceptability, or placed on the qualified products list.

The luminaries shall be installed as per manufacturer instructions. The adjustments shall be set to ideal positions for the installation including, but not limited to, aiming the light system to comply with the required aiming position in the approved photometric calculations.

The environmental integrity of the housing and enclosure shall not be compromised by the installation process.

800-10.06 MEASUREMENT AND PAYMENT. LED Sign Luminaires shall be measured and paid for at the contract unit price each for LED Sign Luminaires. The payment will be full compensation for the LED Sign Luminaire and drivers, mounting hardware, wiring, step down transformer, all catalog cuts and photometric calculations, and all material, labor, equipment, tools, and incidentals necessary to complete the work.

This page is intentionally left blank

BID/PROPOSAL FORM

Contract No. MA 679-000-002

Bid/Proposal Of _____
(Name)

_____
(Address)

_____
(Phone Number)

To furnish and deliver all materials and to perform all work in accordance with the Specifications and the other Contract Documents except as specifically stated otherwise in the Special Provisions relating to Contract No. **MA 679-000-002** for **Upgrade and Replace Existing Signing – Northern Region** as defined in the Special Provisions on which proposal will be received until twelve (12) Noon on the **16th** **of September, 2010** in the Bid Box of the Maryland Transportation Authority, Division of Procurement and Statutory Program Compliance, Building 300, 1st floor, located at the Francis Scott Key Bridge, Baltimore, MD. The work will be performed in **Baltimore, Harford and Cecil Counties in Maryland and New Castle County in Delaware.**

Bids will be opened publicly at 12:00 Noon on the Bid Date in the Engineering Conference Room of the Transportation Authority which is located directly adjacent to the Bid Box.

To the Maryland Transportation Authority, Baltimore, MD:

In accordance with the published "Notice to Contractors" of the Maryland Transportation Authority, inviting proposals for the work; identified above, I/We certify; that I/We am/are the only person or persons interested in this Proposal as principals; that it is made without collusion with any person, firm or corporation; that an examination has been made of the Contract Documents and of the work site; that I/We certify have the equipment, labor, supervision and financial capacity to perform this contract either with my/our organization or with subcontractors; that I/We propose to furnish all necessary machinery, equipment, tools, labor and other means of construction and to furnish all materials specified in the manner and at the time prescribed; that I/We understand that the quantities of work as indicated herein are to be determined by me/us; that I/We further understand that all work required by this contract is to be performed in accordance with the following Schedule of Prices.

SCHEDULE OF PRICES

NOTE: This proposal shall be filled in by the bidder, with the prices written in words and numerals. The extension amounts of unit costs shall also be filled in. For complete information concerning these items, see Specifications, Special Provisions and Contract Form.

ITEM NOS.	APPROXIMATE QUANTITIES	DESCRIPTION OF ITEM AND PRICE BID (IN WRITTEN WORDS)	UNIT PRICE DOLLARS	UNIT PRICE CTS.	AMOUNTS DOLLARS	AMOUNTS CTS.
8001	16	EACH OF INSTALL TYPE I DYNAMIC MESSAGE SIGNS WITH INTEGRATED CONTROLLER, LED 3 LINES/ 21 CHARACTERS PER LINE, LINE MATRIX, 15-30 DEGREE VIEWING ANGLE, 18" CHARACTERS, WALK-IN ACCESS AT _____. PER EACH				
8002	293	SQUARE FEET OF REMOVE EXISTING BRIDGE MOUNTED SIGNS AND SUPPORTS AT _____. PER SQUARE FOOT				
		THIS ITEM IS INTENTIONALLY LEFT BLANK AT _____.				
		THIS ITEM IS INTENTIONALLY LEFT BLANK AT _____.				
8005	262	LINEAR FEET OF GALVANIZED STEEL BEAMS (W6X16) AT _____. PER LINEAR FOOT				

SCHEDULE OF PRICES

NOTE: This proposal shall be filled in by the bidder, with the prices written in words and numerals. The extension amounts of unit costs shall also be filled in. For complete information concerning these items, see Specifications, Special Provisions and Contract Form.

ITEM NOS.	APPROXIMATE QUANTITIES	DESCRIPTION OF ITEM AND PRICE BID (IN WRITTEN WORDS)	UNIT PRICE DOLLARS	UNIT PRICE CTS.	AMOUNTS DOLLARS	AMOUNTS CTS.
8031	1	EACH OF LED "OPEN/CLOSED" BLANKOUT SIGN FOR OH-7a AT _____. PER EACH				
8032	1	EACH OF LED "OPEN/CLOSED" BLANKOUT SIGN FOR C-21 AT _____. PER EACH				
8033	1338	CUBIC YARDS OF CONCRETE FOR SIGN FOUNDATION AT _____. PER CUBIC YARD				
8034	3741	LINEAR FEET OF WOOD SIGN SUPPORTS 4 INCH X 6 INCH AT _____. PER LINEAR FOOT				
8035	449	EACH OF SQUARE PERFORATED TUBULAR STEEL SIGN POSTS AT _____. PER EACH				

SCHEDULE OF PRICES

NOTE: This proposal shall be filled in by the bidder, with the prices written in words and numerals. The extension amounts of unit costs shall also be filled in. For complete information concerning these items, see Specifications, Special Provisions and Contract Form.

ITEM NOS.	APPROXIMATE QUANTITIES	DESCRIPTION OF ITEM AND PRICE BID (IN WRITTEN WORDS)	UNIT PRICE DOLLARS	UNIT PRICE CTS.	AMOUNTS DOLLARS	AMOUNTS CTS.
8091	4910	LINEAR FEET OF CABLE - 1 CONDUCTOR, NO 1 AWG, TYPE USE, 600V AT _____. PER LINEAR FOOT				
8092	103	LINEAR FEET OF SPECIAL SIGN SUPPORT (TS 6"X6"X3/8") AT _____. PER LINEAR FOOT				
8093	21	LINEAR FEET OF GALAVANIZED STEEL SQUARE TUBE (TS 8"X8"X5/16") AT _____. PER LINEAR FOOT				
8094	200	CUBIC YARDS OF CONTINGENT ROCK EXCAVATION AT _____. PER CUBIC YARD				
8095	126	EACH OF LED SIGN LUMINAIRES AT _____. PER EACH				

SCHEDULE OF PRICES

NOTE: This proposal shall be filled in by the bidder, with the prices written in words and numerals. The extension amounts of unit costs shall also be filled in. For complete information concerning these items, see Specifications, Special Provisions and Contract Form.

ITEM NOS.	APPROXIMATE QUANTITIES	DESCRIPTION OF ITEM AND PRICE BID (IN WRITTEN WORDS)	UNIT PRICE		AMOUNTS	
			DOLLARS	CTS.	DOLLARS	CTS.
		AGGREGATE AMOUNTS AT UNIT PRICES USING ITEMS 1001-1018, 2001, 6001-6008, 8001-8002 & 8005-8095 AT _____.				

(ii) The business' policy of maintaining a drug and alcohol free workplace;

(iii) Any available drug and alcohol counseling, rehabilitation, and employee assistance programs; and

(iv) The penalties that may be imposed upon employees who abuse drugs and alcohol in the workplace;

(g) Provide all employees engaged in the performance of the contract with a copy of the statement required by §K(2)(b), above;

(h) Notify its employees in the statement required by §K(2)(b), above, that as a condition of continued employment on the contract, the employee shall:

(i) Abide by the terms of the statement; and

(ii) Notify the employer of any criminal drug or alcohol abuse conviction for an offense occurring in the workplace not later than 5 days after a conviction;

(i) Notify the procurement officer within 10 days after receiving notice under §K(2)(h)(ii), above, or otherwise receiving actual notice of a conviction;

(j) Within 30 days after receiving notice under §K(2)(h)(ii), above, or otherwise receiving actual notice of a conviction, impose either of the following sanctions or remedial measures on any employee who is convicted of a drug or alcohol abuse offense occurring in the workplace:

(i) Take appropriate personnel action against an employee, up to and including termination; or

(ii) Require an employee to satisfactorily participate in a bona fide drug or alcohol abuse assistance or rehabilitation program; and

(k) Make a good faith effort to maintain a drug and alcohol free workplace through implementation of §K(2)(a)—(j), above.

(3) If the business is an individual, the individual shall certify and agree as set forth in §K(4), below, that the individual shall not engage in the unlawful manufacture, distribution, dispensing, possession, or use of drugs or the abuse of drugs or alcohol in the performance of the contract.

(4) I acknowledge and agree that:

MARYLAND TRANSPORTATION AUTHORITY

Second Pre-Bid Meeting

CONTRACT NO. MA-679-000-002
Upgrade and Replace Existing Signing - Northern Region
Baltimore County /Harford County/Cecil County / New Castle County (DE)

8:30 AM – 9:30AM
August 19, 2010
300 Authority Drive
Baltimore, MD 21222

The following were in attendance:

		Phone	Fax
Alisha Wright	MDTA	410-537-7812	410-537-7801
Meshelle Howard	MDTA	410-537-7832	410-537-7801
Nekeisha Suarez	MDTA	410-537-7831	410-537-7801
Nelson Leiva	J. Fletcher Creamer & Son	609-481-3308	609-481-3308
Willie Windsor	Electric Masters	410-381-8940	410-381-9053
Chico Rebello	RNG	410-335-4755	410-335-4776
Todd Carlile	Collinson Inc.	610-469-9677	610-469-9470
Roxane Y Mukai	MDTA/OEC/Traffic	410-537-7848	410-537-7803
Umesh Murthy	Transtech Engineering Consultants	410-660-1606	410-537-7803
Andrew Kitchen	Griffin Inc.	888-786-8517	856-786-3362
Jeremy Mocny	Whitman, Requardt, & Assoc., LLP	443-224-1634	410-235-2695
Neil Leary	Whitman, Requardt, & Assoc., LLP	410-235-3450	410-235-2695

After distributing copies of the agenda, Ms. Alisha Wright opened the meeting with the following announcements:

1. This is the second pre-bid meeting for MA-679-000-002 Upgrade and Replace Existing Signing - Northern Region. The project includes fabricating, installing, removing and/or replacing overhead, cantilever, bridge mounted and ground mounted signs and sign structures. The work includes both static and dynamic message signs. Work also involves modifications to bridge structures necessary to perform the signing and sign structures work. The contract time is 540 calendar days. The liquidated damages are $800.00 per calendar day.

2. Persons interested in visiting the site should contact Mr. John Lohmeyer at (410) 537-1107.

3. Bids for Contract No. MA-679-000-002 are due at 12 Noon on September 9, 2010. Bids should be placed in the Bid Box located on the first floor of the Engineering Building (300 Authority Drive, Dundalk, MD 21222) and should consist of one completed bid book. Late bids will not be accepted.

4. The Authority does not encourage delivery of bid packages by overnight service. However, if the Contractor chooses to send the bid package overnight, the bid should be delivered at least one day in advance. It will be the responsibility of the Contractor to make sure that his/her bid package is placed in the Bid Box. The outside envelope of the mailed package must clearly identify the Contract number and mention that it is a bid package.

5. The minutes from this meeting will be included in addendum #8 and distributed to all purchasers of the bid documents. A copy of the distributed "list of purchasers of invitation for bids" will be attached. The anticipated date for Addendum No.8 is Thursday, September 2, 2010. *(No written questions received, Addendum issued on Friday, August 27, 2010).*

6. Written questions will be accepted by the MDTA until 4:00 PM, Thursday, August 26, 2010. Questions should be addressed to:

   Maryland Transportation Authority
   Engineering Division
   300 Authority Drive
   Baltimore, MD 21222
   Attn: Ms. Roxane Y. Mukai

   Alternatively, questions may be faxed to 410-537-7801. Responses to questions received by MDTA will be distributed to all purchasers of bid documents.

7. Please make sure you fill out the bid tabs accurately and completely. Not doing so may render your bid as non-responsive.

8. We strongly recommend that you review page II, The Notice to bidders and pages III-V, Important Information Regarding MBE Utilization and Bidding Requirements of this invitation to bids prior to submitting your bid on this project.

9. There is an MBE goal for this project. The Overall goal is 25% with no sub-goals.

Ms. Nekeisha Suarez provided a brief description of the Minority Business Enterprise (MBE) participation program and handed out the MBE Program Pre-Bid Hand Out including the NAICS codes used for this contract.

An overall MBE subcontract participation goal of 25 percent of the total contract dollar amount has been established for this procurement, with no sub-goals.

The Office of Minority Business Enterprises is located at the Authority's Point Breeze offices at the following address:

Maryland Transportation Authority
Minority Business Enterprise Office
2310 Broening Hwy, Suite 150
Baltimore, MD 21224

The meeting was then open to questions. The following questions were raised and responses provided:

Question: What are the MBE forms that are required to be filled in at the time of bid?

Response: MBE Forms A & B need to be filled in when the bid package is submitted.

Question: Will the sub-contractors also have to post a bond ?

Response: No. Only the Prime Contractor is required to post a bond to the Authority. The sub-contractor should work with the Prime Contractor to address any bonding requirements of the Prime Contractor.

Question: With reference to rock excavation, no soil borings are provided. Can you provide soil borings?

Response: We do not have any soil borings at the work locations. We suggest that you refer to USGS maps to get an idea of locations of rock.

Question: At drilled shafts locations, how will the rock excavation be paid?

Response: If rock is encountered while drilling, it will be paid as rock excavation as per Special Provision 800-9 Contingent Rock Excavation. Refer to the same Special Provision for definition of rock.

Question: On the sign structure detail sheets (SN-8 & SN-9) you show 2'-9" cover over the foundation. SHA uses 1'-0". Anchor bolts lengths vary without knowing the slope. We cannot bid on price for anchor bolts.

Response: Additional information will be provided in the Addendum.

Final response: Related plans and quantity for Item 8033 Concrete for Sign Foundation have been revised in the Addendum No.8.

Approved

PRE-BID SIGN-IN SHEET

CONTRACT: MA-679-000-002

UPGRADE AND REPLACE EXISTING SIGNING – NORTHERN REGION
JOHN F. KENNEDY MEMORIAL HIGHWAY AND THOMAS J. HATEM MEMORIAL BRIDGE

Thursday, August 19, 2010

NAME (PRINT)	COMPANY NAME	PHONE NUMBER	FAX NUMBER
Alisha Wright	MDTA	410-537-7812	410-537-7801
Merrill [illegible]	MDTA [illegible]	410-537-7832	[illegible]
Nekeesha [illegible]	MDTA Construct. Hdqs	410 537 7831	410-537 7801
Nelson Leiva	J Fletcher Creamer & Son	(609) 481-3308	(609) 481-3308
Willie Windsor	Electric Masters (MDOT MBE)	410-381-8940	410-381-9053
Chica Rebelle	RNG construction	4436778389	410 3354776
Todd Carlile	Collinson, Inc.	610-469-9677 Ext 3030	610-469-9470
Roxane Y. Mukai	MdTA	410-537-7848	410-537-7803
Andrew Kitchen	Griffin Sign	888-786-8517	856-786-3362
Umesh P Murthy	Transtech Engg. Consultants Inc.	410-660-1606	410-537-7803
Jeremy Mocny	Whitman, Requardt & Assoc. LLP	443 224 1634	410 235 3695

LIST OF PURCHASERS OF INVITATION FOR BIDS

Contract No.: MA 679-000-002 Price: $60.00
Bid Opening Date: September 9, 2010 Class: F

J. Fletcher Creamer & Son, Inc. 1219 Mays Landing Rd. Folsom, NJ 08037 P: (609) 481-3310 F: (609) 561-6507	Rommel Engineering & Construction, Inc. 1177 Patuxent Rd. Odenton, MD 21113 P: (301) 912-5740 F: (301) 912-5541	Specialty Service Contractors, Inc. 215 Cockeysville Rd. Cockeysville, MD 21030 P: (410) 329-1001 F: (410) 329-9869
Collinson, Inc. 1773 Pottstown Pike Glenmore, PA 19343 P: (610) 469-9677 F: (610) 469-9470	CDC News/Bidtool One Oakbrook Terrace Suite 510 Oak Brook Terr., IL 60181 P: (512) 634-5966 F: (866) 714-9554	Elderlee, Inc. 150 South Sumner Street York, PA 17404 P: (717) 843-0021 F: (717) 843-1795 **(2 sets)**
Bruce & Merrilees Electric Co. 930 Cass Street New Castle, PA 16101 P: (724) 652-5566 F: (724) 652-8290	Midasco, LLC 7121 Dorsey Run Rd. Elkridge, MD 21075 P: (410) 579-6712 F: (410) 579-6795	Walpar, LLC 4200 Jefferson Ave., S.W. Birmingham, AL 35228 P: (205) 925-4990 F: (205) 925-7273
Griffin Sign, Inc. 464 N. Randolph Ave. Cinnaminson, NJ 08077 P: (856) 786-8517 F: (856) 786-3362	RN'G Construction, Inc. 10711-D Philadelphia Rd. Perry Hall, MD 21128 P: (410) 335-4755 F: (410) 335-4776	South Penn-Delta 6 Dixon St. Selbyville, DE 19975 P: (302) 436-6063 ext.11 F: (302) 436-2885
Traffic Systems & Technology 7855 Coppermine Dr. Manassas, VA 20109 P: (703) 530-9655 F: (703) 530-9656	Highway Safety Systems, Inc 716 White Horse Pike Hammonton, NJ 08037 P: (609) 567-2122 F: (609) 567-4420	Mid-Park, Inc. (Interstate Structures) 1302 Port Rd. Jeffersonville, IN 47130 P: (812) 284-6430 F: (812) 284-6420
Brookfield Fabricating Corporation 111 Stanbury Industrial Dr. Brookfield, MO 64628 P: (660) 258-2214 F: (660) 258-2021	Elderlee, Inc. 150 S. Sumner St. York, PA 17404 P: (717) 843-0021 F: (717) 843-1795	

NACIS CODES
MA-679-000-002

NAICS Codes	Descriptions
CPM	Critical Path Method
MOT	Maintenance of Traffic
Guardrail	Guardrails
238210	Electrical Contractors
237310	Highway, Street, and Bridges
334290	Other Communications Equipment Manufacturing
423440	Other Commercial Equipment Merchant Wholesalers
339950	Sign Manufacturing

Maryland Department of Transportation
Office of Minority Business Enterprise

MBE/DBE Application Assistance Workshop

Date:
July 6, 2010

Location:
MDOT Headquarters
7201 Corporate Center Dr.
Hanover, MD 21076

Registration:
9:30 a.m. - 10 a.m.

Online pre-registration is strongly encouraged. Visit *www.mdot.maryland.gov/MBE_Program/Index.html* and go to the **"Application Assistance Workshop" section.**

Workshop:
10 a.m. - 1 p.m.

Cost:
Free

Special Resource Guest:

Welcome BRAC

Upcoming Workshops:

August 3, 2010

September 7, 2010

October 5, 2010

Attention small and minority business owners!

Small and minority business owners interested in increasing their exposure to State, local and federal government contracting opportunities are encouraged to attend a free workshop focused on Maryland's **Minority Business Enterprise (MBE)** and **Disadvantaged Business Enterprise (DBE) certification** program.

Demystify the Application Process

☑ Receive a comprehensive overview of the certification process.

☑ Take an indepth look at the Uniform Certification Application.

☑ Meet with a certification expert one-on-one and ask questions about the application as it relates specifically to your business.

Who Should Attend?

☑ Firms interested in learning about the benefits of MBE/DBE certification.

☑ Firms with questions about the application and/or the application process.

☑ Firms seeking guidance on specific elements of the application.

The MBE/DBE Application Assistance Workshop is hosted by the Maryland Department of Transportation's (MDOT) Office of Minority Business Enterprise (OMBE) – *the official certification agency for the State.*

The free workshop is held the first Tuesday of every month. Online pre-registration is strongly encouraged.

For more information, visit the Minority/Disadvantaged Business Enterprise section of MDOT's website at www.mdot.maryland.gov.

Dual Certification Procurement Information

Effective on October 1, 2009, Minority Business Enterprise (MBE) firms may elect to be dually certified as woman-owned businesses and as members of an ethnic or racial category. For purposes of achieving any gender or ethnic/racial MBE participation subgoals in a particular contract, an MBE firm that has dual certification may participate in the contract either as a woman-owned business or as a business owned by a member of a racial or ethnic minority group, **but not both**.

WARNING – PLEASE READ:

- **A firm must be listed in the MDOT MBE/DBE Directory with the gender category in order to be used to meet the gender subgoal.**
- **A firm must be listed in the MDOT MBE/DBE Directory with an ethnic/racial category in order to be used to meet the ethnic/racial subgoal.**
- **A firm must be listed in the MDOT MBE/DBE Directory with both the gender and ethnic/racial categories in order for a contractor to have the option of selecting which of those categories it will use for the firm on a State contract.**
- **Contractors should designate whether the MBE firm will be used as a woman-owned business or as a business owned by a member of a racial/ethnic group before calculating the percentage of MBE participation goals and subgoals they intend to meet.**

Maryland's MBE/DBE Directory will reflect the dual certification status beginning October 1, 2009. You can access the MBE/DBE Directory at http://mbe.mdot.state.md.us. Firms with dual certification will now be listed as follows:

Example:

ABC Corporation, Inc.
123 Corporate Circle
Hanover, MD 21076
Female/African American
00-000

Maryland
Transportation
Authority

Minority Business Enterprise (MBE) Program Pre- Bid Hand-out

Prepared By: Procurement and Statutory Program Compliance (PSPC)
December 2009

Contents

- Minority Business Enterprise (MBE) Program Highlights.....Pg.4
- Maryland Department of Transportation (MDOT) MBE Plan Form "A – D" for State Funded Bids and Proposals.....Pg. 9
- Good Faith Efforts Waiver Checklist Pg.13
- Minority / Disadvantage Business Enterprise Good Faith Efforts Policy Statement.....Pg.15
- Structural Steel Policy Statement.....Pg.19
- Using the MDOT MBE/DBE Directory (Example).....Pg.23
- Frequently asked Common Terms as Defined by the MDOT MBE Manual.....Pg.32

MINORITY BUSINESS ENTERPRISE PROGRAM HIGHLIGHTS

Maryland Transportation Authority

Minority Business Enterprise Program Highlights

For purposes of MBE contract goal attainment and MBE Contract Compliance, the following information highlights the Maryland Department of Transportation (MDOT) Program Requirements:

1. Any participating MBE must be certified by MDOT to perform the item(s) of work /service selected for contract goal attainment.

2. Any participating MBE must serve a commercially useful function and may not act like a broker, unless it is certified as a broker (insurance or real estate). A firm is considered to perform a commercially useful function when it is responsible for execution of a distinct element of the work of a contract and carries out it responsibilities by actually performing, managing and supervising the work involved and /or negotiates the cost of, arranges and accepts delivery of and pays for the materials or supplies required for the work of its contract. If, at any time before execution of the contract, the contractor determines that the designated MBE subcontractor has or will become unavailable, it immediately shall notify the Administration.

3. Any change in the approved MBE Plan must be approved in advance by the Administration and shall indicate the contractor's efforts to substitute another certified MBE subcontractor to perform the work.

4. Contract Goal Credits for Materials and Supplies.

   a. A bidder may count toward its MBE goal expenditures for materials and supplies obtained from certified business suppliers, provided that the certified businesses assume the actual and contractual responsibility for the provision of the materials and supplies. The bidder may count its entire expenditure to a certified business supplier that manufactures or produces goods from raw material or that substantially alters

goods before resale. The bidder may count 60 percent of the expenditures to certified suppliers who are not manufactures towards its MBE goals.

b. Double Payee (Joint) checks to MBEs and suppliers for materials used by an MBE sub-contractor for its contracted work are allowable providing such a payment arrangement is offered to all subcontractor relationships and not restricted to just MBEs, and the MBE participates in scheduling the delivery of the materials and is fully responsible for ensuring that the materials meet specifications. However, when the contractor makes such payments, it is recommended that the payments be made by jointly endorsable checks signed by the contractor and MBE.

c. For MBE firms that are not MBE regular dealers or manufacturers, a contractor may only count toward its MBE goal the fees charged for delivery of materials and supplies required on the job site (but not the cost of the materials and supplies themselves) when the trucking enterprise or delivery service is not also the manufacturer of or regular dealer in the materials and supplies, provided that the fee is determined by the administration to be reasonable and not excessive as compared with fees customarily allowed for similar services.

5. Third Tier Subcontracting. Third Tier Contracting is not the usual way for a prime contractor to achieve a MBE goal. However, there may be rare occasions when third tier contracting would be acceptable. Two conditions must be met before approval of a third tier contracting arrangement, which may be entered into to meet a MBE goal:

a. The Authority must be satisfied that there is no way except by third tier contracting that a MBE/DBE goal can be achieved;

b. The prime contractor must request of the Authority, in writing, prior to the awarding of a contract, that approval be granted for each third tier contract arrangement. The

request must contain the specifics as to why a third tier contracting arrangement is being requested to meet the MBE goal.

6. Waivers:

The Administration will strictly adhere to the requirement for documentation of any wavier requests as provided in COMAR. Accordingly, if, for any reason, a contractor is unable to achieve the contract goal or sub-goal MBE participation, it may request, in writing, an exception (waiver) to the goal with justification to include the following:

a. A detailed statement of the efforts made to select portions of the work proposed to be performed by certified MBE (s);

b. A detailed statement of the efforts made to contract and negotiate with certified MBEs including:

(i) The names, addresses, dates and telephone numbers of MBEs contacted; and

(ii) A description of the information provided to MBEs regarding the plans, specifications and anticipated time schedule for portions of the work to be performed:

(iii) As to each certified MBE that placed a subcontract quotation or offer that your company considers not to be acceptable, a detailed statement of the reasons for this conclusion; and

(iv) A list of certified MBEs found to be unavailable. This list should be accompanied by a MBE Unavailability Certification (Form D-EEO-005) signed by the MBE, or a detailed statement from the contractor concerning the MBE's refusal to give the certification.

A waiver of a contract goal may be granted only upon a reasonable demonstration by the bidder or offeror that certified MBE participation was unable to be obtained or was unable to

be obtained at a reasonable price and if the Administration determines that a waiver serves the public interest.

7. MBE Contract Compliance Monitoring ....MBE contract compliance monitoring commences upon official award of the contract has been made and continues throughout the life of the contract. An assigned contract compliance officer will advise the contractor and all approved participating MBE subcontractors, in writing, of compliance requirements, monitoring activities and will request necessary records to establish MBE contractor compliance. If a contractor or any participating MBE subcontractor is found to be in non-compliance with the terms of MDOT's MBE Program or with the State's MBE Law, and fails or refuses to take the corrective action required, administrative sanctions may be imposed in order to promote the purpose of MDOT's MBE Program. These may be, suspension of work, withholding payment, referral of the matter to the Office of the Attorney General for action, or any other action that is authorized under the contract or by State or federal laws.

8. Fraud Provisions

Bidders are advised that Section 14-308 of the MBE Law provides that a person may prosecuted for a felony for the following acts:

a. Fraudulently obtaining, holding or attempting to obtain or hold MBE certification;

b. Aiding another person in fraudulently obtaining, holding or attempting to obtain or hold MBE certification;

c. Willfully obstructing, impeding, or attempting to obstruct or impede a State officially or employee or employee investigating the qualifications of a business entity that has requested certification;

d. Fraudulently obtaining, attempting to obtain, or aiding another person in fraudulently obtaining or attempting to obtain, public monies to which the person is not entitled; or

e. In any minority business enterprise matter administered under subtitle14:

(i) Willfully falsify, conceal, or cover up a material fact by any scheme or device;

(ii) Make a false or fraudulent statement or representation; or

(iii) Use a false writing or document that the person knows to contain a false statement or entry

Persons found guilty of violating these provisions are guilty of a felony and on conviction are subject to a fine not exceeding $ 20,000 or imprisonment not exceeding five years, or both. Persons convicted under Section 14-308 may also be debarred from performing on State contracts by the Board of Public Works ("Board") for a period of time determined to be appropriate by the Board under the circumstances.

9. MBE Contract Support

Personnel of the Maryland Department of Transportation, its Administrations and the Authority offer contractor practicable support for MBE contract goal attainment. This assistance is available from Monday through Friday during normal business hours by calling 410-865-1269. Examples of MDOT Program assistance include:

To Majority Contractors

- Identifying subcontract items for goal attainment
- Answering questions related to MBE Program requirements

To Minority Contractors

- Answering questions related to MBE Program requirements
- Providing information on required contract records
- Referral to designated consultants for assistance for business related problems

MARYLAND DEPARTMENT OF TRANSPORTATION (MDOT)

MINORITY BUSINESS ENTERPRISE (MBE) FORMS STATE-FUNDED

"A" thru "D"
For bids only

MDOT MBE FORM A
STATE-FUNDED CONTRACTS (BIDS ONLY)
CERTIFIED MBE UTILIZATION AND FAIR SOLICITATION AFFIDAVIT

THIS AFFIDAVIT MUST BE INCLUDED WITH THE BID. IF THE BIDDER FAILS TO ACCURATELY COMPLETE AND SUBMIT THIS AFFIDAVIT AS REQUIRED, THE BID SHALL BE DEEMED NOT RESPONSIVE.

In connection with the bid submitted in response to Solicitation No. , I affirm the following:

1. MBE Participation (PLEASE CHECK ONLY ONE)

☐ I have met the overall certified Minority Business Enterprise (MBE) participation goal of percent (%) and the subgoal of percent (%) for Women-Owned MBE firms and the subgoal of percent (%) for African-American Owned MBE firms. I agree that the MBE firms listed in the MBE Participation Schedule - Part 2 of the MDOT MBE Form B (State-Funded Contracts – Bids Only) will be used to accomplish the MBE participation goal and subgoals (if any) for this Contract for at least the dollar amounts set forth therein.

OR

☐ I conclude that I am unable to achieve the MBE participation goal and/or subgoals. I hereby request a waiver of the overall goal and/or subgoals. Within 10 business days of receiving notice that our firm is the apparent awardee or as requested by the Procurement Officer, I will submit a written waiver request and all required documentation in accordance with COMAR 21.11.03.11. I agree that the MBE firms listed in the MBE Participation Schedule - Part 2 of the MDOT MBE Form B (State-Funded Contracts – Bids Only) will be used to accomplish the MBE participation goal and subgoals (if any) for this Contract for at least the dollar amounts set forth therein.

2. Additional MBE Documentation

I understand that if I am notified that I am the apparent awardee or as requested by the Procurement Officer, I must submit the following documentation within 10 business days of receiving such notice:
(a) Outreach Efforts Compliance Statement (MDOT MBE Form C - State-Funded Contracts – Bids Only);
(b) Subcontractor Project Participation Statement (MDOT MBE Form D - State-Funded Contracts – Bids Only);
(c) MBE Waiver Request documentation per COMAR 21.11.03.11 (if waiver was requested); and
(d) Any other documentation required by the Procurement Officer to ascertain bidder's responsibility in connection with the certified MBE participation goal and subgoals, if any.

I acknowledge that if I fail to return each completed document (in 2 (a) through (d)) within the required time, the Procurement Officer may determine that I am not responsible and therefore not eligible for contract award.

MDOT MBE FORM A
STATE-FUNDED CONTRACTS (BIDS ONLY)
CERTIFIED MBE UTILIZATION AND FAIR SOLICITATION AFFIDAVIT

3. Information Provided to MBE firms

In the solicitation of subcontract quotations or offers, MBE firms were provided not less than the same information and amount of time to respond as were non-MBE firms.

I solemnly affirm under the penalties of perjury that the information in this affidavit is true to the best of my knowledge, information and belief.

Company Name	Signature of Representative
Address	Printed Name and Title
City, State and Zip Code	Date

MDOT MBE FORM B
STATE-FUNDED CONTRACTS (BIDS ONLY)
MBE PARTICIPATION SCHEDULE

PART 1 – INSTRUCTIONS FOR MBE PARTICIPATION SCHEDULE

PARTS 2 AND 3 MUST BE INCLUDED WITH THE BID. IF THE BIDDER FAILS TO ACCURATELY COMPLETE AND SUBMIT PART 2 WITH THE BID AS REQUIRED, THE BID SHALL BE DEEMED NOT RESPONSIVE.

*** STOP ***

FORM INSTRUCTIONS
PLEASE READ BEFORE COMPLETING THIS FORM

1. Please refer to the Maryland Department of Transportation (MDOT) MBE Directory at www.mdot.state.md.us to determine if a firm is certified for the appropriate North American Industry Classification System ("NAICS") Code and the product/services description (specific product that a firm is certified to provide or specific areas of work that a firm is certified to perform). For more general information about NAICS, please visit www.naics.com. Only those specific products and/or services for which a firm is certified in the MDOT Directory can be used for purposes of achieving the MBE participation goals.

2. In order to be counted for purposes of achieving the MBE participation goals, the firm must be certified for that specific NAICS ("MBE" for State-funded projects designation after NAICS Code). WARNING: If the firm's NAICS Code is in graduated status, such services/products will not be counted for purposes of achieving the MBE participation goals. Graduated status is clearly identified in the MDOT Directory (such graduated codes are designated with the word graduated after the appropriate NAICS Code).

3. Examining the NAICS Code is the first step in determining whether an MBE firm is certified and eligible to receive MBE participation credit for the specific products/services to be supplied or performed under the contract. The second step is to determine whether a firm's Products/Services Description in the MBE Directory includes the products to be supplied and/or services to be performed that are used to achieve the MBE participation goals.

4. If you have any questions as to whether a firm is certified to perform the specific services or provide specific products, please call MDOT's Office of Minority Business Enterprise at 1-800-544-6056 or via email at mbe@mdot.state.md.us.

5. The Contractor's subcontractors are considered second-tier subcontractors. Third-tier contracting used to meet an MBE goal is to be considered the exception and not the rule. The following two conditions must be met before MDOT, its Modal Administrations and the Maryland Transportation Authority, may approve a third-tier contracting agreement: (a) the bidder must request in writing approval of each third-tier contract arrangement, and (b) the request must contain specifics as to why a third-tier contracting arrangement should be approved. These documents must be submitted with the bid in Part 2 of this MBE Participation Schedule.

6. For each MBE firm that is being used as supplier/wholesaler/regular dealer/broker/manufacturer, please follow these instructions for calculating the dollar amount of the subcontract for purposes of achieving the MBE participation goals:

   A. Is the firm certified as a broker of the products/supplies? If the answer is YES, please continue to Item C. If the answer is NO, please continue to Item B.

   B. Is the firm certified as a supplier, wholesaler, regular dealer, or manufacturer of such products/supplies? If the answer is YES, continue to Item D. If the answer is NO, continue to Item C only if the MBE firm is certified to perform trucking/hauling services under NAICS Codes 484110, 484121, 484122, 484210, 484220 and 484230. If the answer is NO and the firm is not certified under these NAICS Codes, then no MBE participation credit will be given for the supply of these products.

   C. For purposes of achieving the MBE participation goal, you may count only the amount of any reasonable fee that the MBE firm will receive for the provision of such products/supplies - not the total subcontract amount or the value (or a percentage thereof) of such products and/or supplies. In Column 4 of the MBE Participation Schedule, please state the amount of any reasonable fee that the MBE firm will receive for the provision of such products/services in Line 4.1.

   D. Is the firm certified as a manufacturer (refer to the firm's NAICS Code and specific description of products/services) of the products/supplies to be provided? If the answer is NO, please continue to Item E. If the answer is YES, for purposes of achieving the MBE participation goal, you may count the total amount of the subcontract. In Column 4 of the MBE Participation Schedule, please state the total amount of the subcontract in Line 4.1.

MDOT MBE FORM B
STATE-FUNDED CONTRACTS (BIDS ONLY)
MBE PARTICIPATION SCHEDULE

PART 1 – INSTRUCTIONS FOR MBE PARTICIPATION SCHEDULE

E. Is the firm certified as a supplier, wholesaler and/or regular dealer? If the answer is YES (i) if the MBE firm is furnishing and installing the materials and is certified to perform these services, please include in Line 4.1 the total value of the subcontract amount (including full value of supplies); or (ii) if the firm is only being used as a supplier, wholesaler and/or regular dealer or is not certified to install the supplies/materials, for purposes of achieving the MBE participation goal, you may only count sixty percent (60%) of the value of the subcontract for these supplies/products (60% Rule). In Column 4, Section 4.2 of the MBE Participation Schedule, please state the amount of the subcontract for these supplies/products only (not installation) and sixty percent (60%) of such value.

7. WARNING: The percentage of MBE participation, computed using the dollar amounts in Column 4 for all of the MBE firms listed in Part 2, MUST at least equal the MBE participation goal and subgoals (if applicable) as set forth in MDOT MBE Form A – State-Funded Contracts (Bids Only) for this solicitation. If a bidder is unable to achieve the MBE participation goal and/or any subgoals (if applicable), then the bidder must request a waiver in Form A or the bid will be deemed not responsive. You may wish to use the Worksheet shown below to assist you in calculating the percentages and confirming that you have met the applicable MBE participation goal and subgoals (if any).

WORKSHEET

Total African American-Owned Firm Participation Amount (Add amounts listed for African-American Owned Firms in Column 4 of MBE Participation Schedule)	$_____
Divide by Total Contract Amount	÷_____
Percent African American-Owned Participation	=_____%
Total Women-Owned Firm Participation Amount (Add amounts listed for Women-Owned Firms in Column 4 of MBE Participation Schedule)	$_____
Divide by Total Contract Amount	÷_____
Percent Women-Owned Firm Participation	=_____%
Total MBE Firm Participation Amount (Add amounts listed for all MBE Firms in Column 4 of MBE Participation Schedule)	$_____
Divide by Total Contract Amount	÷_____
Percent Overall MBE Participation	=_____%

MDOT MBE FORM B
STATE-FUNDED CONTRACTS (BIDS ONLY)
MBE PARTICIPATION SCHEDULE

PART 2 – MBE PARTICIPATION SCHEDULE

PART 2 MUST BE INCLUDED WITH THE BID. IF THE BIDDER FAILS TO ACCURATELY COMPLETE AND SUBMIT PART 2 WITH THE BID AS REQUIRED, THE BID SHALL BE DEEMED NOT RESPONSIVE.

PAGE __ OF ___

Prime Contractor	Project Description	Solicitation Number

LIST INFORMATION FOR EACH CERTIFIED MBE SUBCONTRACTOR USED TO ACHIEVE THE MBE PARTICIPATION GOAL.

COLUMN 1	COLUMN 2	COLUMN 3	COLUMN 4 Unless the bidder requested a waiver in MDOT MBE Form A – State Funded Contracts (Bids Only) for this solicitation, the cumulative MBE participation for all MBE firms listed herein must equal at least the MBE participation goal and subgoals set forth in Form A.
NAME OF MBE SUBCONTRACTOR AND TIER	CERTIFICATION NO. AND MBE CLASSIFICATION	NAICS CODE/S NAICS Code/s of the specific products to be supplied or services to be performed by the MBE firm	FOR PURPOSES OF ACHIEVING THE MBE PARTICIPATION GOAL AND SUBGOALS. State the dollar amount of the products/services in Line 4.1 except for those services or products where the MBE firm is being used as a wholesaler, supplier, regular dealer, or broker. For those items of work where the MBE firm is being used as a supplier, wholesaler and/or regular dealer complete Line 4.2 using the 60% Rule.
☐ Please check if MBE firm is a third-tier contractor (if applicable). Please submit written documents in accordance with Section 5 of Part 1 - Instructions	Certification Number: _____ ☐ Women-Owned ☐ African American-Owned ☐ Other MBE Classification		4.1 TOTAL AMOUNT TO BE PAID TO THE SUBCONTRACTOR (EXCLUDING PRODUCTS/SERVICES FROM SUPPLIERS, WHOLESALERS, REGULAR DEALERS AND BROKERS) $ 4.2 TOTAL AMOUNT TO BE PAID TO THE SUBCONTRACTOR FOR ITEMS OF WORK WHERE THE MBE FIRM IS BEING USED AS A SUPPLIER, WHOLESALER AND/OR REGULAR DEALER) (PLEASE REFER TO SECTION 6(E) IN PART 1 - INSTRUCTIONS). Total value of Supplies/Products $ X 60% (60% Rule) = $ (Amount for purposes of achieving the MBE Participation Goal and Subgoals).

☐Please check if Continuation Sheets are attached.

MDOT MBE FORM B
STATE-FUNDED CONTRACTS (BIDS ONLY)
MBE PARTICIPATION SCHEDULE
CONTINUATION SHEET

PAGE ___ OF ___

Prime Contractor	Project Description	Solicitation Number

LIST INFORMATION FOR EACH CERTIFIED MBE SUBCONTRACTOR USED TO ACHIEVE THE MBE PARTICIPATION GOAL

COLUMN 1	COLUMN 2	COLUMN 3	COLUMN 4 Unless the bidder requested a waiver in MDOT MBE Form A – State Funded Contracts (Bids Only) for this solicitation, the cumulative MBE participation for all MBE firms listed herein must equal at least the MBE participation goal and subgoals set forth in Form A.
NAME OF MBE SUBCONTRACTOR AND TIER	CERTIFICATION NO. AND MBE CLASSIFICATION	NAICS CODE/S NAICS Code/s of the specific products to be supplied or services to be performed by the MBE firm	FOR PURPOSES OF ACHIEVING THE MBE PARTICIPATION GOAL AND SUBGOALS, State the dollar amount of the products/services in Line 4.1 except for those services or products where the MBE firm is being used as a wholesaler, supplier, regular dealer, or broker. For those items of work where the MBE firm is being used as a supplier, wholesaler and/or regular dealer complete Line 4.2 using the 60% Rule.
☐ Please check if MBE firm is a third-tier contractor (if applicable). Please submit written documents in accordance with Section 5 of Part 1 - Instructions	Certification Number: _____ ☐ Women-Owned ☐ African-American-Owned ☐ Other MBE Classification		4.1 TOTAL AMOUNT TO BE PAID TO THE SUBCONTRACTOR (EXCLUDING PRODUCTS/SERVICES FROM SUPPLIERS, WHOLESALERS, REGULAR DEALERS AND BROKERS) $ 4.2 TOTAL AMOUNT TO BE PAID TO THE SUBCONTRACTOR FOR ITEMS OF WORK WHERE THE MBE FIRM IS BEING USED AS A SUPPLIER, WHOLESALER AND/OR REGULAR DEALER) (PLEASE REFER TO SECTION 6(E) IN PART 1 - INSTRUCTIONS). Total value of Supplies/Products $ X 60% (60% Rule) = $ (Amount for purposes of achieving the MBE Participation Goal and Subgoals).

☐Please check if Continuation Sheets are attached.

MDOT MBE FORM B
STATE-FUNDED CONTRACTS (BIDS ONLY)
MBE PARTICIPATION SCHEDULE

PART 3 – CERTIFICATION FOR MBE PARTICIPATION SCHEDULE

PARTS 2 AND 3 MUST BE INCLUDED WITH THE BID. AS DIRECTED IN THE INVITATION TO BID.

I hereby affirm that I have reviewed the Products and Services Description (specific product that a firm is certified to provide or areas of work that a firm is certified to perform) set forth in the MDOT MBE Directory for each of the MBE firms listed in Part 2 of this MBE Form B for purposes of achieving the MBE participation goals and subgoals that were identified in the MBE Form A that I submitted with this solicitation, and that the MBE firms listed are only performing those products/services/areas of work for which they are certified. I also hereby affirm that I have read and understand the form instructions set forth in Part 1 of this MBE Form B.

I solemnly affirm under the penalties of perjury that the contents of Parts 2 and 3 of MDOT MBE Form B are true to the best of my knowledge, information and belief.

Company Name	Signature of Representative
Address	Printed Name and Title
City, State and Zip Code	Date

MDOT MBE FORM C

STATE-FUNDED CONTRACTS (BIDS ONLY)
OUTREACH EFFORTS COMPLIANCE STATEMENT

In conjunction with the bid submitted in response to Solicitation No. _____, I state the following:

1. Bidder took the following efforts to identify subcontracting opportunities in these specific work categories:

2. Attached to this form are copies of written solicitations (with bidding instructions) used to solicit certified MBE firms for these subcontract opportunities.

3. Bidder made the following attempts to personally contact the solicited MBE firms:

4. **Please Check One:**

☐ Bidder assisted MBE firms to fulfill or to seek waiver of bonding requirements. (DESCRIBE EFFORTS)

☐ This project does not involve bonding requirements.

5. Please Check One:

☐ Bidder did attend the pre-bid meeting/conference

☐ No pre-bid meeting/conference was held.

☐ Bidder did not attend the pre-bid meeting/conference

_____
Company Name

_____
Signature of Representative

_____
Address

_____
Printed Name and Title

_____
Date

MDOT MBE FORM D

STATE-FUNDED CONTRACTS (BIDS ONLY)

MBE SUBCONTRACTOR PROJECT PARTICIPATION AFFIDAVIT

IF THE BIDDER FAILS TO RETURN THIS AFFIDAVIT WITHIN THE REQUIRED TIME, THE PROCUREMENT OFFICER MAY DETERMINE THAT THE BIDDER IS NOT RESPONSIBLE AND THEREFORE NOT ELIGIBLE FOR CONTRACT AWARD. SUBMIT ONE FORM FOR EACH CERTIFIED MBE FIRM LISTED IN THE MBE PARTICIPATION SCHEDULE

Provided that _____ (Prime Contractor's Name) is awarded the State contract in conjunction with Solicitation No. _____, such Prime Contractor will enter into a contract with _____(Subcontractor's Name) committing to participation by the MBE firm _____ (MBE Name) with MDOT Certification Number _____ (if subcontractor previously listed is also the MBE firm, please restate name and provide MBE Certification Number) will receive for at least $_____ (Total Subcontract Amount) for performing the following products/services for the Contract:

NAICS CODE	WORK ITEM, SPECIFICATION NUMBER, LINE ITEMS OR WORK CATEGORIES (IF APPLICABLE)	DESCRIPTION OF SPECIFIC PRODUCTS AND/OR SERVICES

I solemnly affirm under the penalties of perjury that the information provided in this MBE Subcontractor Project Participation Affidavit is true to the best of my knowledge, information and belief. I acknowledge that, for purposes of determining the accuracy of the information provided herein, the Procurement Officer may request additional information, including, without limitation, copies of the subcontract agreements and quotes.

PRIME CONTRACTOR	SUBCONTRACTOR (SECOND-TIER)	SUBCONTRACTOR (THIRD-TIER)
Signature of Representative: _____	Signature of Representative: _____	Signature of Representative: _____
Printed Name and Title: _____	Printed Name and Title: _____	Printed Name and Title: _____
Firm's Name: _____	Firm's Name: _____	Firm's Name: _____
	Federal Identification Number: _____	Federal Identification Number: _____
Address: _____	Address: _____	Address: _____
Telephone: _____	Telephone: _____	Telephone: _____
Date: _____	Date: _____	Date: _____

IF MBE FIRM IS A THIRD-TIER SUBCONTRACTOR, THIS FORM MUST ALSO BE EXECUTED BY THE SECOND-TIER SUBCONTRACTOR THAT HAS THE SUBCONTRACT AGREEMENT WITH THE MBE FIRM.

Maryland Transportation Authority (MdTA)
Office of Minority Business Enterprise
2310 Broening Highway, Suite 150
Baltimore, Maryland 21224
(410) 537-6769 (410) 537-7801 – Fax

Maryland Transportation Authority

Disadvantaged/Minority Contractor Unavailability Certificate - D-005 (02-03)

PLEASE COMPLETE AND RETURN TO THE ABOVE ADDRESS:

It is hereby certified that:

_____
(Name of Prime Contractor)

_____
(Number) (Street) (City) (State) (Zip code)

On _____ contacted the Disadvantage/Minority Business Enterprise:
(Date)

_____
(Name of Sub-contractor)

_____
(Number) (Street) (City) (State) (Zip code)

Seeking to obtain a Bid for work/service in relation to project/contract number: _____

List the type of work/service requested:

_____
_____
_____

Indicate the form of Bid sought:

_____
_____

Reason given by Sub-contractor for lack of participation:

_____
_____

Certification:

To the best of my knowledge and belief, said subcontractor is unavailable or unable to participate due to the above reason. Signature of Prime Contractor:

_____
(Name) (Date)

The above statement is a true and accurate account of why my Firm is unable to participate. Signature of Sub-contractor:

_____
(Name) (Date)

MARYLAND DEPARTMENT OF TRANSPORTATION (MDOT)

MINORITY BUSINESS ENTERPRISE (MBE) FORMS
STATE-FUNDED

"A" thru "D"
For Proposals only

MDOT MBE FORM A
STATE-FUNDED CONTRACTS (PROPOSALS ONLY)
CERTIFIED MBE UTILIZATION AND FAIR SOLICITATION AFFIDAVIT

THIS AFFIDAVIT MUST BE INCLUDED WITH THE PROPOSAL AS DIRECTED IN THE SOLICITATION. THE FAILURE OF AN OFFEROR TO PROPERLY COMPLETE AND SUBMIT THIS AFFIDAVIT SHALL RESULT IN A DETERMINATION THAT THE PROPOSAL IS NOT SUSCEPTIBLE OF BEING SELECTED FOR AWARD.

In connection with the proposal submitted in response to Solicitation No. , I affirm the following:

1. MBE Participation (PLEASE CHECK ONLY ONE)

☐ I have met the overall certified Minority Business Enterprise (MBE) participation goal of percent (%) and the subgoal of (%) percent for Women-Owned MBE firms and the subgoal of percent (%) for African-American Owned MBE firms. I agree that the MBE firms listed in the MBE Participation Schedule - Part 2 of the MDOT MBE Form B (State-Funded Contracts – Proposals Only) will be used to accomplish the MBE participation goal and subgoals (if any) for this Contract for at least the percentage amounts set forth therein.

OR

☐ I conclude that I am unable to achieve the MBE participation goal and/or subgoals. I hereby request a waiver of the overall goal and/or subgoals. Within 10 business days of receiving notice that our firm is the apparent awardee or as requested by the Procurement Officer, I will submit a written waiver request and all required documentation in accordance with COMAR 21.11.03.11. I agree that the MBE firms listed in the MBE Participation Schedule - Part 2 of the MDOT MBE Form B (State-Funded Contracts – Proposals Only) will be used to accomplish the MBE participation goal and subgoals (if any) for this Contract for at least the percentage amounts set forth therein.

2. Additional MBE Documentation

I understand that if I am notified that I am the apparent awardee or as requested by the Procurement Officer, I must submit the following documentation within 10 business days of receiving such notice:
(a) Outreach Efforts Compliance Statement (MDOT MBE Form C - State-Funded Contracts – Proposals Only);
(b) Subcontractor Project Participation Statement (MDOT MBE Form D - State-Funded Contracts – Proposals Only);
(c) MBE Waiver Request documentation per COMAR 21.11.03.11 (if waiver was requested); and
(d) Any other documentation required by the Procurement Officer to ascertain offeror's responsibility in connection with the certified MBE participation goal and subgoals, if any.

I acknowledge that if I fail to return each completed document (in 2 (a) through (d)) within the required time, the Procurement Officer may determine that I am not responsible and therefore not eligible for contract award.

MDOT MBE FORM A
STATE-FUNDED CONTRACTS (PROPOSALS ONLY)
CERTIFIED MBE UTILIZATION AND FAIR SOLICITATION AFFIDAVIT

3. Information Provided to MBE firms

In the solicitation of subcontract quotations or offers, MBE firms were provided not less than the same information and amount of time to respond as were non-MBE firms.

I solemnly affirm under the penalties of perjury that the information in this affidavit is true to the best of my knowledge, information and belief.

Company Name	Signature of Representative
Address	Printed Name and Title
City, State and Zip Code	Date

MDOT MBE FORM B
STATE-FUNDED CONTRACTS (PROPOSALS ONLY)
MBE PARTICIPATION SCHEDULE

PART 1 – INSTRUCTIONS FOR MBE PARTICIPATION SCHEDULE

PARTS 2 AND 3 MUST BE INCLUDED WITH THE PROPOSAL. THE FAILURE OF AN OFFEROR TO PROPERLY COMPLETE AND SUBMIT PART 2 SHALL RESULT IN A DETERMINATION THAT THE PROPOSAL IS NOT SUSCEPTIBLE OF BEING SELECTED FOR AWARD.

*** STOP ***

FORM INSTRUCTIONS
PLEASE READ BEFORE COMPLETING THIS FORM

1. Please refer to the Maryland Department of Transportation (MDOT) MBE Directory at www.mdot.state.md.us to determine if a firm is certified for the appropriate North American Industry Classification System ("NAICS") Code and the product/services description (specific product that a firm is certified to provide or specific areas of work that a firm is certified to perform). For more general information about NAICS, please visit www.naics.com. Only those specific products and/or services for which a firm is certified in the MDOT Directory can be used for purposes of achieving the MBE participation goals.

2. In order to be counted for purposes of achieving the MBE participation goals, the firm must be certified for that specific NAICS ("MBE" for State-funded projects designation after NAICS Code). WARNING: If the firm's NAICS Code is in graduated status, such services/products will not be counted for purposes of achieving the MBE participation goals. Graduated status is clearly identified in the MDOT Directory (such graduated codes are designated with the word graduated after the appropriate NAICS Code).

3. Examining the NAICS Code is the first step in determining whether an MBE firm is certified and eligible to receive MBE participation credit for the specific products/services to be supplied or performed under the contract. The second step is to determine whether a firm's Products/Services Description in the MBE Directory includes the products to be supplied and/or services to be performed that are used to achieve the MBE participation goals.

4. If you have any questions as to whether a firm is certified to perform the specific services or provide specific products, please call MDOT's Office of Minority Business Enterprise at 1-800-544-6056 or send an email to mbe@mdot.state.md.us.

5. The Contractor's subcontractors are considered second-tier subcontractors. Third-tier contracting used to meet an MBE goal is to be considered the exception and not the rule. The following two conditions must be met before MDOT, its Modal Administrations and the Maryland Transportation Authority, may approve a third-tier contracting agreement: (a) the bidder must request in writing approval of each third-tier contract arrangement, and (b) the request must contain specifics as to why a third-tier contracting arrangement should be approved. These documents must be submitted with the proposal in Part 2 of this MBE Participation Schedule.

6. For each MBE firm that is being used as supplier/wholesaler/regular dealer/broker/manufacturer, please follow these instructions for calculating the percentage of the Contract (as provided in price/financial proposal or any best and final offer) for purposes of achieving the MBE participation goal and subgoals (if applicable):

   A. Is the firm certified as a broker of the products/supplies? If the answer is YES, please continue to Item C. If the answer is NO, please continue to Item B.

   B. Is the firm certified as a supplier, wholesaler, regular dealer, or manufacturer of such products/supplies? If the answer is YES, continue to Item D. If the answer is NO, continue to Item C only if the MBE firm is certified to perform trucking/hauling services under NAICS Codes 484110, 484121, 484122, 484210, 484220 and 484230. If the answer is NO and the firm is not certified under these NAICS Codes, then no MBE participation credit will be given for the supply of these products.

   C. For purposes of achieving the MBE participation goal, you may count only the amount of any reasonable fee that the MBE firm will receive for the provision of such products/supplies - not the total subcontract amount or the value (or a percentage thereof) of such products and/or supplies. In Column 4 of the MBE Participation Schedule, please state the amount of any reasonable fee as a percentage of Contract that the MBE firm will receive for the provision of such products/services in Line 4.1.

   D. Is the firm certified as a manufacturer (refer to the firm's NAICS Code and specific description of products/services) of the products/supplies to be provided? If the answer is NO, please continue to Item E. If the answer is YES, for purposes of achieving the MBE participation goal, you may count the total amount of the subcontract. In Column 4 of the MBE Participation Schedule, please state the total amount of the subcontract in Line 4.1 as a percentage of Contract.

MDOT MBE FORM B

STATE-FUNDED CONTRACTS (PROPOSALS ONLY)
MBE PARTICIPATION SCHEDULE

PART 1 – INSTRUCTIONS FOR MBE PARTICIPATION SCHEDULE

E. Is the firm certified as a supplier, wholesaler and/or regular dealer? If the answer is YES (i) if the MBE firm is furnishing and installing the materials and is certified to perform these services, please include in Line 4.1 the total value of the subcontract amount (including full value of supplies); or (ii) if the firm is only being used as a supplier, wholesaler and/or regular dealer or is not certified to install the supplies/materials, for purposes of achieving the MBE participation goal, you may only count sixty percent (60%) of the value of the subcontract for these supplies/products (60% Rule). In Line, 4.2 of the MBE Participation Schedule, please state amount of the subcontract for these supplies/products only (not installation) and sixty percent (60%) of such value.

7. WARNING: Please note that the cumulative MBE participation in Column 4 for all of the MBE firms listed in Part 2 MUST at least equal the MBE participation goal and subgoals (if applicable) as set forth in MDOT MBE Form A – State-Funded Contracts (Proposals Only) for this solicitation. If an offeror is unable to achieve the MBE participation goals and/or any subgoals (if applicable), then the offeror must request a waiver in Form A or it may result in a determination that the proposal is not susceptible of being selected for award.

Worksheet shown below to assist you in calculating the percentages and confirming that you have met the applicable MBE participation goal and subgoals (if any).

WORKSHEET

Total African American Owned Firm Participation Amount (Add amounts listed for African American Owned Firms in Column 4 of MBE Participation Schedule)	$_____
Divide by Total Contract Amount	÷_____
Percent African American-Owned Participation	=_____%
Total Women-Owned Firm Participation Amount (Add amounts listed for Women-Owned Firms in Column 4 of MBE Participation Schedule)	_____
Divide by Total Contract Amount	÷_____
Percent Women-Owned Firm Participation	=_____%
Total MBE Firm Participation Amount (Add amounts listed for all MBE Firms in Column 4 of MBE Participation Schedule)	$_____
Divide by Total Contract Amount	÷_____
Percent Overall MBE Participation	=_____%

MDOT MBE FORM B
STATE-FUNDED CONTRACTS (PROPOSALS ONLY)
MBE PARTICIPATION SCHEDULE

PART 2 – MBE PARTICIPATION SCHEDULE

PART 2 MUST BE INCLUDED WITH THE PROPOSAL AS DIRECTED IN THE SOLICITATION. THE FAILURE OF AN OFFEROR TO PROPERLY COMPLETE AND SUBMIT PART 2 OF THE MBE PARTICIPATION SCHEDULE SHALL RESULT IN A DETERMINATION THAT THE PROPOSAL IS NOT SUSCEPTIBLE TO BEING SELECTED FOR AWARD.

PAGE __ OF ___

Prime Contractor	Project Description	Solicitation Number

LIST INFORMATION FOR EACH CERTIFIED MBE SUBCONTRACTOR USED TO ACHIEVE THE MBE PARTICIPATION GOAL

COLUMN 1	COLUMN 2	COLUMN 3	COLUMN 4 Unless the offeror requested a waiver in MDOT MBE Form A – State Funded Contracts (Proposals Only) for this solicitation, the cumulative MBE participation for all MBE firms listed herein must equal at least the MBE participation goal and subgoals set forth in Form A.
NAME OF MBE SUBCONTRACTOR AND TIER	CERTIFICATION NO. AND MBE CLASSIFICATION	NAICS CODE/S NAICS Code/s of the specific products to be supplied or services to be performed by the MBE firm	FOR PURPOSES OF ACHIEVING THE MBE PARTICIPATION GOAL AND SUBGOALS. State the subcontract amount as a percentage of the total contract of the product/services in Line 4.1 except for those services or products where the MBE Firm is being used as a wholesaler, supplier or regular dealer. For those items of work where the MBE firm is being used as a supplier, wholesaler and/or regular dealer, complete Line 4.2 using the 60% rule.
☐ Please check if MBE firm is a third-tier contractor (if applicable). Please submit written documents in accordance with Section 5 of Part 1 - Instructions	Certification Number: _____ ☐ Women-Owned ☐ African American-Owned ☐ Other MBE Classification		4.1 TOTAL AMOUNT TO BE PAID TO THE SUBCONTRACTOR - PLEASE STATE THIS AMOUNT AS A PERCENTAGE OF THE TOTAL CONTRACT VALUE. (EXCLUDING PRODUCTS/SERVICES FROM SUPPLIERS, WHOLESALERS, AND REGULAR DEALERS – SEE 4.2 BELOW) _____% 4.2 TOTAL AMOUNT TO BE PAID TO THE SUBCONTRARCTOR FOR ITEMS OF WORK WHERE THE MBE FIRM IS BEING USED AS A SUPPLIER, WHOLESALER AND/OR REGULAR DEALER) (PLEASE REFER TO SECTION 6(E) IN PART 1 - INSTRUCTIONS). Total value of Supplies/Products _____% X 60% (60% Rule) = _____% (amount for purposes of achieving the MBE Participation Goal and Subgoals).

☐ Please check if Continuation Sheets are attached.

MDOT MBE FORM B
STATE-FUNDED CONTRACTS (PROPOSALS ONLY)
MBE PARTICIPATION SCHEDULE
CONTINUATION SHEET

PAGE __ OF ___

Prime Contractor	Project Description	Solicitation Number

LIST INFORMATION FOR EACH CERTIFIED MBE SUBCONTRACTOR USED TO ACHIEVE THE MBE PARTICIPATION GOAL

COLUMN 1	COLUMN 2	COLUMN 3	COLUMN 4 Unless the offeror requested a waiver in MDOT MBE Form A – State Funded Contracts (Proposals Only) for this solicitation, the cumulative MBE participation for all MBE firms listed herein must equal at least the MBE participation goal and subgoals set forth in Form A.
NAME OF MBE SUBCONTRACTOR AND TIER	CERTIFICATION NO. AND MBE CLASSIFICATION	NAICS CODE/S NAICS Code/s of the specific products to be supplied or services to be performed by the MBE firm	FOR PURPOSES OF ACHIEVING THE MBE PARTICIPATION GOAL AND SUBGOALS. State the subcontract amount as a percentage of the total contract of the product/services in Line 4.1 except for those services or products where the MBE Firm is being used as a wholesaler, supplier or regular dealer. For those items of work where the MBE firm is being used as a supplier, wholesaler and/or regular dealer, complete Line 4.2 using the 60% rule.
☐ Please check if MBE firm is a third-tier contractor (if applicable). Please submit written documents in accordance with Section 5 of Part 1 - Instructions	Certification Number: _____ ☐ Women-Owned ☐ African American-Owned ☐ Other MBE Classification		4.1 TOTAL AMOUNT TO BE PAID TO THE SUBCONTRACTOR (PLEASE STATE THIS AMOUNT AS A PERCENTAGE OF THE TOTAL CONTRACT VALUE - EXCLUDING PRODUCTS/SERVICES FROM SUPPLIERS, WHOLESALERS, AND REGULAR DEALERS) _____% 4.2 TOTAL AMOUNT TO BE PAID TO THE SUBCONTRARCTOR FOR ITEMS OF WORK WHERE THE MBE FIRM IS BEING USED AS A SUPPLIER, WHOLESALER AND/OR REGULAR DEALER) (PLEASE REFER TO SECTION 6(E) IN PART 1 - INSTRUCTIONS). Total value of Supplies/Products_____% X 60% (60% Rule) = _____% (amount for purposes of achieving the MBE Participation Goal and Subgoals).

☐ Please check if Continuation Sheets are attached.

MDOT MBE FORM B
STATE-FUNDED CONTRACTS (PROPOSALS ONLY)
MBE PARTICIPATION SCHEDULE

PART 3 – CERTIFICATION FOR MBE PARTICIPATION SCHEDULE

PARTS 2 AND 3 MUST BE INCLUDED WITH THE PROPOSAL AS DIRECTED IN THE SOLICITATION.

I hereby affirm that I have reviewed the Products and Services Description (specific product that a firm is certified to provide or areas of work that a firm is certified to perform) set forth in the MDOT MBE Directory for each of the MBE firms listed in Part 2 of this MBE Form B for purposes of achieving the MBE participation goals and subgoals that were identified in the MBE Form A that I submitted with this solicitation, and that the MBE firms listed are only performing those products/services/areas of work for which they are certified. I also hereby affirm that I have read and understand the form instructions set forth in Part 1 of this MBE Form B.

I solemnly affirm under the penalties of perjury that the contents of Parts 2 and 3 of MDOT MBE Form B are true to the best of my knowledge, information and belief.

Company Name	Signature of Representative
Address	Printed Name and Title
City, State and Zip Code	Date

MDOT MBE FORM C

STATE-FUNDED CONTRACTS (PROPOSALS ONLY)
OUTREACH EFFORTS COMPLIANCE STATEMENT

In conjunction with the offer/proposal submitted in response to Solicitation No. , I state the following:

1. Offeror took the following efforts to identify subcontracting opportunities in these specific work categories:

2. Attached to this form are copies of written solicitations (with bidding instructions) used to solicit certified MBE firms for these subcontract opportunities.

3. Offeror made the following attempts to personally contact the solicited MBE firms:

4. Please Check One:

☐ Offeror assisted MBE firms to fulfill or to seek waiver of bonding requirements. (DESCRIBE EFFORTS)

☐ This project does not involve bonding requirements.

5. Please Check One:

☐ Offeror did attend the pre-proposal meeting/conference

☐ No pre-proposal meeting/conference was held.

☐ Offeror did not attend the pre-proposal meeting/conference

Company Name	Signature of Representative
Address	Printed Name and Title
	Date

MDOT MBE FORM D

STATE-FUNDED CONTRACTS (PROPOSALS ONLY)

MBE SUBCONTRACTOR PROJECT PARTICIPATION AFFIDAVIT

IF THE OFFEROR FAILS TO RETURN THIS AFFIDAVIT WITHIN THE REQUIRED TIME, THE PROCUREMENT OFFICER MAY DETERMINE THAT THE OFFEROR IS NOT RESPONSIBLE AND THEREFORE NOT ELIGIBLE FOR CONTRACT AWARD. SUBMIT ONE FORM FOR EACH CERTIFIED MBE FIRM LISTED IN THE MBE PARTICIPATION SCHEDULE

Provided that _____ (Prime Contractor's Name) is awarded the State contract in conjunction with Solicitation No. _____, such Prime Contractor will enter into a contract with _____(Subcontractor's Name) committing to participation by the MBE firm _____ (MBE Name) with MDOT Certification Number _____ (if subcontractor previously listed is also the MBE firm, please restate name and provide MBE Certification Number) will receive for at least _____% (Total Subcontract Amount -- as a percentage of total Contract value) for performing the following products/services for the Contract:

NAICS CODE	WORK ITEM, SPECIFICATION NUMBER, LINE ITEMS OR WORK CATEGORIES (IF APPLICABLE)	DESCRIPTION OF SPECIFIC PRODUCTS AND/OR SERVICES

I solemnly affirm under the penalties of perjury that the information provided in this MBE Subcontractor Project Participation Affidavit is true to the best of my knowledge, information and belief. I acknowledge that, for purposes of determining the accuracy of the information provided herein, the Procurement Officer may request additional information, including, without limitation, copies of the subcontract agreements and quotes.

PRIME CONTRACTOR	SUBCONTRACTOR (SECOND-TIER)	SUBCONTRACTOR (THIRD-TIER)
Signature of Representative: _____	Signature of Representative: _____	Signature of Representative: _____
Printed Name and Title: _____	Printed Name and Title: _____	Printed Name and Title: _____
Firm's Name: _____	Firm's Name: _____	Firm's Name: _____
Address: _____	Federal Identification Number: _____	Federal Identification Number: _____
Telephone: _____	Address: _____	Address: _____
Date: _____	Telephone: _____	Telephone: _____
	Date: _____	Date: _____

IF MBE FIRM IS A THIRD-TIER SUBCONTRACTOR, THIS FORM MUST ALSO BE EXECUTED BY THE SECOND-TIER SUBCONTRACTOR THAT HAS THE SUBCONTRACT AGREEMENT WITH THE MBE FIRM.

Maryland Transportation Authority (MdTA)
Office of Minority Business Enterprise
2310 Broening Highway , Suite 150
Baltimore, Maryland 21224
(410) 537-6769 (410) 537-7801 ~ Fax

Maryland Transportation Authority

Disadvantaged/Minority Contractor Unavailability Certificate - D-005 (02-03)

PLEASE COMPLETE AND RETURN TO THE ABOVE ADDRESS;

It is hereby certified that:

_____
(Name of Prime Contractor)

_____
(Number) (Street) (City) (State) (Zip code)

On _____ **contacted the Disadvantage/Minority Business Enterprise:**
(Date)

_____
(Name of Sub-contractor)

_____
(Number) (Street) (City) (State) (Zip code)

Seeking to obtain a Bid for work/service in relation to project/contract number: _____

List the type of work/service requested:

_____
_____
_____

Indicate the form of Bid sought:

_____
_____

Reason given by Sub-contractor for lack of participation:

_____
_____

Certification:

To the best of my knowledge and belief, said subcontractor is unavailable or unable to participate due to the above reason. Signature of Prime Contractor:

_____
(Name) (Date)

The above statement is a true and accurate account of why my Firm is unable to participate. Signature of Sub-contractor:

_____
(Name) (Date)

GOOD FAITH EFFORTS WAIVER CHECKLIST

PRIME CONTRACTORS' GOOD FAITH EFFORTS/WAIVER CHECKLIST

Prime Contractors who put Good Faith into action will:

- ✓ Use direct solicitation, minority/women community organizations, contractors' groups, and local, state, and federal minority/women-owned business assistance offices to reach MBEs;
- ✓ Identify and assist firms that may need bonding, lines of credits, insurance, equipment, and other related issues; or assist firms that are not certified but could possibly serve on a contract and satisfy DBE/MBE goals by becoming certified;
- ✓ Identify clear sub-contractible work that will enable MBEs to compete;
- ✓ Provide the MBEs with proper information regarding the job; to include plans, specifications, and anticipated time schedule for portions of the work to be performed;
- ✓ Coordinate pre-bid meetings to inform MBEs of contracting and subcontracting opportunities;
- ✓ Advertise in general circulation, trade associations, and minority focused media concerning the subcontracting opportunities;
- ✓ Provide written notice to all certified MBEs who are certified in the work areas and have capabilities of the contract for which their participation is solicited (Contractor must allow a minimum of 10 days for the MBEs to respond to the written solicitation.); and
- ✓ Follow up on initial solicitations of interest by contacting MBEs to determine if the MBEs are interested (Contractor must detail the efforts showing names, addresses, dates, and telephone numbers of the certified MBEs contacted along with a description of information provided.)

Prime Contractors who have done the above and are submitting a waiver will:

- ✓ Document everything listed above;
- ✓ As required by regulations provide a written request for a waiver;
- ✓ Provide detailed statements of efforts to achieve the goal; to include the name, address and telephone number of all DBE/MBEs contacted, as well as the date of contact;
- ✓ Provide a list of unavailable MBEs, including a Minority Contractor Unavailability Certification Form (Form D-005) signed by an owner or officer of each unavailable DBE/MBE (If the DBE/MBE refused to sign D-005, the contractor will /should submit a statement regarding this refusal.);
- ✓ If the contractor deems a DBE/MBE to be unqualified and rejects the DBE/MBE, the contractor will provide written explanation of this decision (Contractor's reasoning must be based on a thorough investigation of MBE capabilities.);
- ✓ Provide evidence that the contractor tried to negotiate in good faith with interested MBEs;
- ✓ Demonstrate that certified MBE participation was unable to be obtained at a reasonable price or that public interest is best served by a waiver;
- ✓ Demonstrate a reasonable effort to meet the overall MBE goal with other MBE classifications if the request for a waiver is for a certain MBE classification within an overall MBE goal; and
- ✓ Provide evidence from prior projects showing that the contractor has previously successfully met or exceeded assigned MBE goals.

MDOT
MINORITY/DISADVANTAGE
BUSINESS ENTERPRISE
GOOD FAITH EFFORTS POLICY
STATEMENT

MARYLAND DEPARTMENT OF TRANSPORTATION

POLICY STATEMENT – GOOD FAITH EFFORTS
April 22, 2004

MINORITY/DISADVANTAGED BUSINESS ENTERPRISES

It is the policy of the Maryland Department of Transportation (MDOT) that businesses owned by socially and economically disadvantaged person(s) shall have the maximum feasible opportunity to participate in the performance of contracts awarded by MDOT. The MDOT requires its contractors and subcontractors not to discriminate on the basis of race, color, religion, national origin, sex or disability in the award or performance of contracts. In support of this commitment, the MDOT has adopted the following Good Faith Efforts (GFE) Policy, which shall be applicable to all contracts awarded by the MDOT or its modal administrations.

In accordance with 49 CFR, Part 26, 53 and Md. Code Ann., State Fin. & Proc. Art., 14-302, the MDOT shall award a contract only to a bidder/offeror that makes GFE to meet the Minority Business Enterprise (MBE) or Disadvantaged Business Enterprise (DBE) contract goal. A determination that a bidder/offeror has made GFE shall only be made upon a determination by the MDOT that the bidder/offeror has shown that it:

- Has obtained enough MBE or DBE participation to meet the contract goal; or
- Has taken all necessary and reasonable steps to achieve the goal, which by their scope, intensity and appropriateness to the objective, could reasonably be expected to obtain sufficient MBE/DBE participation, even if they were ultimately unsuccessful.

The MDOT will make a fair and reasonable judgment whether a bidder/offeror who did not meet the goal made adequate GFEs. This policy expands the definition of GFE to allow greater flexibility to ensure DBE/MBE participation is obtained.

At a minimum, a statement of GFE submitted by the bidder/offeror shall include:

1. The name, address, and telephone number of all DBE/MBEs contacted, as well as the date of contact;
2. A description of the information provided to the contacted DBE/MBEs regarding the plans, specifications and anticipated time schedule for portions of the work to be performed;
3. As appropriate, a detailed statement of the reasons why a DBE/MBE quotation was considered unacceptable; and
4. As appropriate, a list of DBE/MBE contractors found to be unavailable. For DBE/MBE contractors that are unavailable, the bidder/offeror shall provide a Minority Contractor Unavailability Certificate Form (Form D-005) signed by an owner or officer of the DBE/MBE.

- If a DBE/MBE refuses to sign the unavailability certificate, the bidder/offeror shall submit a statement indicating as such.

To aid in the determination of whether the bidder/offeror has shown GFE, the MDOT may also look at the percentage of DBE/MBE participation obtained by other bidders/offerors on the procurement.

In addition to the requirements above, the following is a list of outreach efforts that MDOT will consider as part of the bidder/offeror's GFE to obtain DBE/MBE participation. Bidders/offerors shall be encouraged to offer innovative GFE initiatives to demonstrate GFE. MDOT administrations have the flexibility to approve such innovative initiatives. The following list is illustrative only and not intended to be exhaustive.

In a GFE determination, MDOT administrations may consider any information provided by a bidder/offeror concerning the following outreach efforts:

1. The bidder/offeror's efforts to solicit through all reasonable and available means (e.g., attendance at pre-bid meetings, advertising and/or written notices) the interest of certified DBEs/MBEs that may have the capability to perform the work of the contract. The bidder/offeror should present evidence that it solicited this interest within adequate time to allow the DBEs/MBEs to respond to the solicitation. The bidder/offeror should also provide evidence that it took appropriate steps to follow up initial solicitations.

2. The bidder/offeror's selection of the work to be performed by DBEs/MBEs in order to increase the likelihood that the DBE/MBE contract goals will be achieved. This includes, where appropriate, breaking out contract work items into economically feasible units to facilitate DBE/MBE participation, even when the prime contractor might otherwise prefer to perform these work items with its own forces.

3. The bidder/offeror's actions to provide interested DBEs/MBEs with adequate information about the plans, specifications, and requirements of the contract in a timely manner to assist them in responding to a solicitation.

4. The bidder/offeror's negotiations with DBE/MBEs

    a. Negotiating in good faith with interested DBEs/MBEs. It is the bidder/offeror's responsibility to make a portion of the work available to DBE/MBE subcontractors and suppliers and to select those portions of the work or material needs consistent with the available DBE/MBE subcontractors and suppliers. Evidence of such negotiation shall include the names, addresses, and telephone numbers of DBEs/MBEs that were considered; a description of the information provided regarding the plans and specifications for the work selected for subcontracting; and information as to why additional agreements could not be reached for DBEs/MBEs to perform the work.

    b. A bidder/offeror using good business judgment would consider a number of factors in negotiating with subcontractors, including DBE/MBE subcontractors, and would take a firm's price and capabilities as well as contract goals into consideration. However, the fact that there may be some additional costs involved in finding and using DBEs/MBEs is not in itself sufficient reason for a bidder/offeror's failure to meet the contract DBE/MBE

goal, as long as such costs are reasonable. Also, the ability or desire of a bidder/offeror to perform the work of a contract with its own organization does not relieve that bidder/offeror of the responsibility to make GFE to meet the contract goal. This policy does not require a prime contractor to accept a higher quote from a DBE/MBE if the price is excessive or unreasonable.

5. The bidder/offeror must provide sound reasons for rejecting a DBE/MBE as unqualified. Any rejection of a DBE/MBE as unqualified shall be based on a thorough investigation of its capabilities. The DBE/MBE's standing within its industry, membership in specific groups, organizations, or associations and political or social affiliations (for example, union vs. non-union employees' status) are not legitimate causes for the rejection or non-solicitation of bids in the contractor's efforts to meet the project goal.

6. The bidder/offeror's efforts to assist interested DBEs/MBEs in obtaining bonding, lines of credit, or insurance as required by the owner or contract.

7. The bidder/offeror's efforts, with prior written approval of the MDOT agency, to assist interested DBEs/MBEs to obtain necessary equipment, supplies, materials, or related assistance or services.

8. The bidder/offeror's effective use of the services of available minority/women community organizations; minority/women contractors' groups; local, state and Federal minority/women business assistance offices; and other organizations as allowed on a case-by-case basis to provide assistance in the recruitment and placement of DBE/MBE.

9. The bidder/offeror's efforts to identify and assist firms that are not certified but could possibly service on a contract and satisfy DBE/MBE goals if the firm were to be certified by the MDOT.

10. Evidence of the bidder/offeror's record of meeting or exceeding DBE/MBE participation goals on prior projects.

This policy applies to all MDOT contracts that contain a DBE/MBE participation goal. All MDOT personnel are responsible for implementing and adhering to this policy.

MDOT
STRUCTURAL STEEL
POLICY STATEMENT

MARYLAND DEPARTMENT OF TRANSPORTATION

POLICY STATEMENT – STRUCTURAL STEEL/LARGE SUPPLY ITEMS
(Revised May 13, 2003)

MINORITY/DISADVANTAGED BUSINESS ENTERPRISES

The policy supercedes the Maryland Department of Transportation (MDOT) Structural Steel/Large Supply Items policy dated September 22, 1994.

MDOT and the Maryland Transportation Authority (MdTA) are committed to providing the maximum amount of contracting opportunities to certified Disadvantaged Business Enterprises (DBEs) and Minority Business Enterprises (MBEs). This policy statement affirms MDOT's efforts to maximize DBE/MBE participation on contracts to the greatest extent possible and applies to all contracts that contain a DBE/MBE goal.

The previous policy excluded Structural Steel as a sub-contractible item available for DBE/MBE participation since there were no structural steel manufacturers certified by MDOT. This exemption is no longer applicable since firms have now been certified under this category.

Structural steel as an item of supply may be included as a sub-contractible item for the setting of DBE/MBE goals on contracts.

In addition, structural steel as an item of supply may be used to obtain or count minority business participation credit under the DBE/MBE Program. The installation or erection of structural steel can be included as a sub-contractible item for goal setting, and as an item available for DBE/MBE participation.

The definition to be used for this policy is as follows:

> The term structural steel refers to the steel elements of the structural steel frame that are essential to the support of the design loads for buildings and bridges, as well as the steel elements in tunnel linings.

Beyond this policy on structural steel, it is vitally important for each MDOT agency and MdTA to apply the provisions of the DBE/MBE program for furnishings and installing large supply items. This policy emphasizes that it is necessary for the DBE/MBE to have a necessary and useful role in the complete business transaction, and a role that is visible outside of the context of the DBE/MBE Program. The role of the firm cannot be a superfluous step to obtain credit for a DBE/MBE goal.

In order for a prime contractor to receive full credit for a large supply item being furnished by a DBE/MBE subcontractor as a "furnish and install" item of work, the DBE/MBE regulations require that the DBE/MBE firm must:

1. Initiate and negotiate the purchase of the steel and/or any large supply item;

2. Be invoiced directly for the cost; and

3. Assume complete responsibility and liability for the item.

To further assist the MDOT agencies in making determinations in this area, the following guidelines are put forth:

1. Count expenditures with DBE/MBEs for materials or supplies toward the goals as provided in the following:

    a. If the materials or supplies are obtained from a DBE/MBE manufacturer, count 100 percent of the cost of the materials or supplies toward MBE goals.

    b. For purposes of this policy, a manufacturer is a firm that operates or maintains a factory or establishment that produces on the premises the materials, supplies, articles, or equipment required under the contract and of the general character described by the specifications.

    c. If the materials or supplies are purchased from a DBE/MBE regular dealer, count 60 percent of the cost of the materials or supplies toward MBE goals.

2. For purposes of this policy and in accordance with 49CFR25.55(e) and the Program Manual, a regular dealer is a firm that owns, operates, or maintains a store, warehouse, or other establishment in which the materials, supplies, articles or equipment of the general character described by the specifications and required under the contract are brought, kept in stock, and regularly sold or leased to the public in the usual course of business.

3. To be a regular dealer, the first must be an established, regular business that engages, as its principal business and under its own name, in the purchase and sale or lease of the products in question.

A person may be a regular dealer in bulk items such as petroleum products, steel, cement, gravel, stone, or asphalt without owning, operating, or maintaining a place of business as provided above if the person both owns and operates distribution equipment for the products. Any supplementing of regular dealers' own distribution equipment shall be by a long-term lease agreement and not on an ad-hoc or contract-by-contract basis.

The Department's Contract Compliance Monitoring Procedures provide the necessary guidance on determining DBE/MBE credit on large supply items. There are several compliance questions, which need to be answered prior to a prime contractor receiving full credit for a DBE/MBE furnish and install item. These questions should include:

1. Who was responsible for setting the dollar amount allotted for supplies on the forms detailing the subcontracted work?
2. How was the cost of supplies derived? Who negotiated the price?
3. Who is responsible for taking delivery of the materials?
4. Who issues the check to pay for the materials?
5. Who assumes contractual and legal responsibility for the materials?
6. Are the materials properly accounted for in the financial records of the subcontractor and not in the records of the prime contractor?

It should be made clear at the beginning of a contract that obtaining participation through the counting of large supply items must comply with the Department's regulations. This also extends to the amount of credit given for the supply items on each contract.

The burden rests on each administration to assess each individual contract prior to the approval of the DBE/MBE package and to monitor the contract closely for compliance. We must continually work to make sure this program brings real benefits to the minority business community.

USING THE MDOT MBE/DBE DIRECTORY (EXAMPLE)

MDOT Directory of Certified MBE and/or DBE firms

BACK | EXIT

Terms of Use

The Minority Business Enterprise Directory is intended to be used as a guide for selecting certified Minority Business Enterprises to utilize on State and/or USDOT assisted contracts. Information in the directory should be verified with the Maryland Department of Transportation's Office of Minority Business Enterprise.

This web site and the information it contains are provided as a public service by the Maryland Department of Transportation (MDOT). The MDOT maintains this Minority Business Enterprise/Disadvantaged Business Enterprise (MBE/DBE) Directory for the purpose of providing a reference source of the firms certified by the MDOT as MBE/DBEs.

The MBE/DBE Directory lists certified firms in alphabetical order and also contains information on the specific products and/or services the firm is certified to provide. The MDOT makes no claims, promises, or guarantees regarding a certified MBE/DBE's competence or capability to perform. It is the responsibility of the user of the information provided here to make his/her own determination regarding the capability, competence, and/or limitations of a certified MBE/DBE firm.

The MDOT makes no claims, promises, or guarantees about the accuracy, completeness, or adequacy of the contents of this web site and expressly disclaims liability for errors and omissions in the contents of this web site. No warranty of any kind is given with respect to the contents of this web site or any links to other web sites it may contain. Reference in this web site to any specific commercial product, process, or service, or the use of any trade or business name is for the information of the public and does not constitute an endorsement or recommendation by the MDOT.

Information presented on this web site is considered public information and may be copied and/or distributed. If there is a question concerning the validity of the information provided in this directory, contact the Maryland Department of Transportation's Office of Minority Business Enterprise. You may contact the office at (410) 865-1269 or (800) 544-6056.

☐ Check this box to bypass this page on future visits and go straight to the directory.

Next -->

EXAMPLE

MDOT Directory of Certified MBE and/or DBE firms

BACK | EXIT

Using the Directory

Firms are certified per industry using the North American Industry Classification System (NAICS). Each assigned code is accompanied by a certification status designation.

Please be advised of the following definitions:

The **"MBE/DBE"** designation indicates the firm is qualified for ANY State of Maryland Contract including USDOT assisted contracts of the MDOT; these include contracts let by the Maryland State Highway Administration, the Maryland Aviation Administration, and the Maryland Transit Administration.

The **"MBE ONLY"** designation indicates the firm is qualified for State-only Funded Contracts and not USDOT assisted contracts of the MDOT.

The **"DBE ONLY"** designation indicates the firm is qualified to participate only on USDOT assisted contracts of the MDOT.

The **"GRADUATED"** designation indicates the firm has graduated in that particular NAICS Code for which it has been certified per Federal and State Regulations. The MBE remains certified but may not participate as a certified MBE/DBE on State and USDOT assisted contracts.

PLEASE NOTE: Effective October 1, 2000, the Small Business Administration established the use of the North American Industry Classification System (NAICS) Codes which replaced the Standard Industrial Classification (SIC) Codes. The Maryland Department of Transportation Office of Minority Business Enterprise has converted the SIC Codes to the NAICS Codes. Please contact the Office of Minority Business Enterprise if you have questions regarding any information on any firm listed in this Directory.

Click here for information regarding small business size standards.

Next -->

EXAMPLE

MDOT Directory of Certified MBE and/or DBE firms

BACK | EXIT

Searching the Database

The MBE/DBE directory is updated daily. There are currently 4,555 certified firms participating in the program. All search results display in a fixed format and are downloadable as an XLS file on the result page.

PRINTING TIP - Web browser print margins (left and right) must be set no greater than .25" to prevent data from being cut off when printing in portrait mode. Print margins are typically changed in the FILE - PAGE SETUP menu.

Immediate Downloads (XLS files)

Download firms certified during the past calendar year or download the entire directory.

Custom Search

Select single, multiple, or select all fields from the list below. To restart a search begin by clearing all fields. Custom searches require the selection of at least one searchable data field.

Minority Status

Firm Name

County (Maryland firms only)

Certification Number

Product or Service

NAICS Code

City

State

Street Address

Zip Code

Phone Number

Contact Name

Next ->

EXAMPLE

Revised 12/2009

MDOT Directory of Certified MBE and/or DBE firms

BACK | EXIT

Custom Search

The system will search all **4,555** certified firms in the database. Separate keywords with single spaces.
Fields left empty will not be searched and will have no effect on the result.

Field Name	Search Terms [clear all fields]	Search Context
NAICS code(s): about NAICS codes	237310 *	Find ALL of these codes
	*	
	*	
	*	
	*	

Search

EXAMPLE

Revised 12/2009

EXAMPLE

MDOT Directory of Certified MBE and/or DBE firms

BACK | EXIT

Custom Search

NAICS CODES like "237310"

170 certified firms were found using the above criteria. Download this result set as an XLS file.
Select a firm name to view the individual firm profile or view all profiles at once.

You can make a custom list of firms based on this result set.

Firm Details	NAICS - Product and Service Description
A & M CONCRETE CORPORATION 43760 TRADE CENTER PLACE, #160 DULLES, VA 20166 FEMALE 96-083	237310-MBE-ONLY - HIGHWAY, STREET, AND BRIDGE CONSTRUCTION (SPECIFICALLY: CURB AND GUTTER, SIDEWALK, PAVERS, SLABS) 238110-MBE-ONLY - POURED CONCRETE FOUNDATION AND STRUCTURE CONTRACTORS (SPECIFICALLY: CONCRETE WORK) 238140-MBE-ONLY - MASONRY CONTRACTORS
A & S ASSOCIATES, INC. 8855 WALKER MILL ROAD CAPITOL HEIGHTS, MD 20743 ASIAN AMERICAN 03-469	236210-MBE/DBE - INDUSTRIAL BUILDING CONSTRUCTION 236220-MBE/DBE - COMMERCIAL AND INSTITUTIONAL BUILDING CONSTRUCTION 237310-MBE/DBE - HIGHWAY, STREET, AND BRIDGE CONSTRUCTION (SPECIFICALLY: HIGHWAY AND STREET CONSTRUCTION, EXCEPT ELEVATED HIGHWAYS) 238140-MBE/DBE - MASONRY CONTRACTORS (SPECIFICALLY: MASONRY, STONE SETTING, AND OTHER STONE WORK) 238220-MBE/DBE - PLUMBING, HEATING, AND AIR-CONDITIONING CONTRACTORS
A2Z ENVIRONMENTAL GROUP, LLC 311 S. HAVEN STREET BALTIMORE, MD 21224 FEMALE 01-080	237110-MBE/DBE - WATER AND SEWER LINE AND RELATED STRUCTURES CONSTRUCTION (SPECIFICALLY: PLACEMENT OF UNDERDRAINS AND OUTLETS) 237310-MBE/DBE - HIGHWAY, STREET, AND BRIDGE CONSTRUCTION (SPECIFICALLY: PAVEMENT LINE STRIPING REMOVAL) 237990-MBE/DBE - OTHER HEAVY AND CIVIL ENGINEERING CONSTRUCTION (SPECIFICALLY: INSTALLATION/MAINTENANCE OF EROSION CONTROL DEVISES, SILT/SUPER SILT

FENCE, ORANGE CONSTRUCTION FENCE, SEDIMENT EXCAVATION/CLEANOUT/EARTH DIKES, DIVERSION/SUPER DIVERSION FENCE, TYPE B & C MATTING)

238910-MBE/DBE - SITE PREPARATION CONTRACTORS
(SPECIFICALLY: EXCVATION CONTRACTOR, GRUBBING/CLEARING; BRIDGE DEMOLITION/REMOVAL OF BRIDGE DECK, REMOVAL OF MANHOLES, TRAFFIC BARRIERS AND PIPES, INTERIOR AND EXTERIOR DEMOLITION, AND PLACEMENT OF TOPSOIL)

423320-MBE/DBE - BRICK, STONE, AND RELATED CONSTRUCTION MATERIAL MERCHANT WHOLESALERS
(SPECIFICALLY: CONCRETE CRUSHING AND/OR TIRE SHREDDING FOR RESALE)

484220-MBE/DBE - SPECIALIZED FREIGHT (EXCEPT USED GOODS) TRUCKING, LOCAL
(STONE, MILLING DEBRIS, TOP SOIL, SPECIALTY HAULING)

561730-MBE/DBE - LANDSCAPING SERVICES
(SPECIFICALLY: SEEDING/MULCHING REFERTILIZATION, LIMESTONE APPLICATION, RESEEDING/SOD, WATERING, TOPSOIL PLACEMENT)

562111-MBE/DBE - SOLID WASTE COLLECTION

562112-MBE/DBE - HAZARDOUS WASTE COLLECTION

562910-MBE/DBE - REMEDIATION SERVICES
(ENVIRONMENTAL CLEANUP, UNDERGROUND TANK TESTING AND REMOVAL)

562998-MBE/DBE - ALL OTHER MISCELLANEOUS WASTE MANAGEMENT SERVICES
(CLEANING OF EXISTING PIPES AND INLETS AND SCOPING OF DRAINS, AND SEPTIC TANK CLEANING)

AB CONSTRUCTION, INC.
9450 ANNAPOLIS ROAD
LANHAM, MD 20706
ASIAN AMERICAN
04-313

236115-MBE-ONLY - NEW SINGLE-FAMILY HOUSING CONSTRUCTION (EXCEPT OPERATIVE BUILDERS)

236116-MBE-ONLY - NEW MULTIFAMILY HOUSING CONSTRUCTION (EXCEPT OPERATIVE BUILDERS)

236210-MBE-ONLY - INDUSTRIAL BUILDING CONSTRUCTION

236220-MBE-ONLY - COMMERCIAL AND INSTITUTIONAL BUILDING CONSTRUCTION

237110-MBE-ONLY - WATER AND SEWER LINE AND RELATED STRUCTURES CONSTRUCTION

237210-MBE/DBE - LAND SUBDIVISION

237310-MBE/DBE - HIGHWAY, STREET, AND BRIDGE CONSTRUCTION

237990-MBE/DBE - OTHER HEAVY AND CIVIL ENGINEERING CONSTRUCTION
(SPECIFICALLY: HIGHWAY, STREET, AND BRIDGE CONSTRUCTION MANAGEMENT)

238110-MBE-ONLY - POURED CONCRETE FOUNDATION AND STRUCTURE CONTRACTORS

238120-MBE-ONLY - STRUCTURAL STEEL AND PRECAST CONCRETE CONTRACTORS

238140-MBE-ONLY - MASONRY CONTRACTORS

238910-MBE-ONLY - SITE PREPARATION CONTRACTORS
(SPECIFICALLY: SOIL REMEDIATION SERVICES, DEMOLITION, CLEARING, GRADING, DRAINAGE, AND DEMOLITION)

541380-MBE-ONLY - TESTING LABORATORIES

AB CONSULTANTS, INC.
9450 ANNAPOLIS ROAD
LANHAM, MD 20706
ASIAN AMERICAN
94-165

236115-MBE/DBE, 236116-MBE/DBE, 236210-MBE/DBE, 236220-MBE/DBE, 237110-MBE/DBE, 237310-MBE/DBE, 238110-MBE/DBE, 238120-MBE/DBE, 238140-MBE/DBE, 541330-MBE-ONLY, 541370-MBE-ONLY, 541380-MBE/DBE, 561210-MBE/DBE

ENGINEERING SERVICES: CIVIL, GEO-TECHNICAL, STRUCTURAL, AND DESIGN - ENGINEERING SERVICE PROFESSIONAL; ENVIRONMENTAL ENGINEERING/REMEDIATION (PHASE I-III), SURVEYING SERVICES, MULTIFAMILY HOUSING CONSTRUCTION, MANUFACTURING AND INDUSTRIAL BUILDING CONSTRUCTION, SINGLE FAMILY HOUSING CONSTRUCTION, COMMERCIAL AND INSTITUTIONAL BUILDING CONSTRUCTION, HIGHWAY AND STREET CONSTRUCTION, BRIDGE, WATER, SEWER, AND PIPELINE CONSTRUCTION, CONCRETE WORK, MASONRY WORK, STRUCTURAL STEEL, CONSTRUCTION MANAGEMENT, TESTING LABORATORIES

ABSOLUTELY STRAIGHT LLC
10015 OLD COLUMBIA ROAD, SUITE B-215
COLUMBIA, MD 21046
FEMALE
07-231

237310-MBE/DBE - HIGHWAY, STREET, AND BRIDGE CONSTRUCTION
(SPECIFICALLY: PARKING LOT STRIPING)

238390-MBE/DBE - OTHER BUILDING FINISHING CONTRACTORS
(SPECIFICALLY: PARKING LOT SEAL COATING AND OTHER PARKING LOT MAINTENANCE)

ACORN BUILDING SERVICES CORP.
P.O. BOX 97
SPENCERVILLE, MD 20867-0097
AFRICAN AMERICAN
05-404

237310-MBE/DBE - HIGHWAY, STREET, AND BRIDGE CONSTRUCTION
(SPECIFICALLY: CONCRETE PAVING, PUBLIC SIDEWALKS, CURBS AND STREET CUTTERS, SIDEWALK, PUBLIC CONSTRUCTION)

238320-MBE/DBE - PAINTING AND WALL COVERING CONTRACTORS
(SPECIFICALLY: INTERIOR PAINTING)

238350-MBE/DBE - FINISH CARPENTRY CONTRACTORS
(SPECIFICALLY: ALUMINUM DOOR AND WINDOW RESIDENTIAL TYPE INSTALLATION, DECK CONSTRUCTION RESIDENTIAL-TYPE, DOOR, FOLDING INSTALLATION, PREFABRICATED SASH AND DOOR INSTALLATION, WINDOW AND DOOR (RESIDENTIAL TYPE) OF ANY MATERIAL PREFABRICATED, INSTALLATION, WINDOW INSTALLATION, WINDOW, METAL-FRAME RESIDENTIAL-TYPE INSTALLATION, WINDOW, WOOD, INSTALLATION)

238990-MBE/DBE - ALL OTHER SPECIALTY TRADE CONTRACTORS
(SPECIFICALLY: CLEANING BUILDING INTERIORS DURING AND IMMEDIATELY AFTER CONSTRUCTION, CLEANING NEW BUILDING INTERIORS IMMEDIATELY AFTER CONSTRUCTION; CONCRETE PATIO CONSTRUCTION, SLAB, CONCRETE PAVING RESIDENTIAL, DRIVEWAY, CURB & GUTTER RESIDENTIAL AND COMMERCIAL DRIVEWAY AND PARKING AREA, CONCRETE, CONCRETE SAWING AND DRILLING, PATIO CONSTRUCTION, PAVERS, BRICK, PATIO INSTALLATION, SIDEWALK CONSTRUCTION RESIDENTIAL AND COMMERCIAL)

561720-MBE/DBE - JANITORIAL SERVICES
(SPECIFICALLY: CARPENTRY WORK, CONSTRUCTION CLEAN UP)

AFRAM, INC. 5450 REISTERSTOWN ROAD, SUITE 101 BALTIMORE, MD 21215 AFRICAN AMERICAN 92-090	237310-MBE/DBE, 238110-MBE/DBE, 238310-MBE/DBE, 238320-MBE/DBE CONCRETE WORK, PAVING, HIGHWAY AND STREET CONSTRUCTION, PAINTING, PLASTERING, DRYWALL, ACOUSTICAL, AND INSULATION WORK.
AGGREGATE PLACEMENT CORP. 4420 HAWTHORNE ROAD INDIAN HEAD, MD 20640 FEMALE 05-429	237310-MBE/DBE, 238110-MBE/DBE, 238990-MBE/DBE CONCRETE WORK-SIDEWALKS; PAVING TO INCLUDE: PARKING LOTS, SLAB, CURB AND GUTTERS; CONCRETE CONSTRUCTION TO INCLUDE: WALLS, DECKS, STORM WATER MANAGEMENT, AND WASTE WATER TREATMENT PLANTS.
AJO CONCRETE CONSTRUCTION, INC. 8820 HILDER AVENUE ANNAPOLIS JUNCTION, MD 20701 HISPANIC AMERICAN 01-148	237310-MBE/DBE - HIGHWAY, STREET, AND BRIDGE CONSTRUCTION (SPECIFICALLY: HIGHWAY AND ROAD MILLING GRINDING SERVICES) 238110-MBE/DBE - POURED CONCRETE FOUNDATION AND STRUCTURE CONTRACTORS)SPECIFICALLY: SIDEWALKS, CURB, SLAB & PAD, WALLS, DRIVEWAYS, ASPHALT PATCHING & DRIVEWAYS) 327320-MBE/DBE - READY-MIX CONCRETE MANUFACTURING 423320-MBE/DBE - BRICK, STONE, AND RELATED CONSTRUCTION MATERIAL MERCHANT WHOLESALERS (SPECIFICALLY: READY-MIX CONCRETE MANUFACTURING THE DISTRIBUTION, BRICK, STONE AND RELATED CONSTRUCTION MATERIAL MERCHANT WHOLESALERS (CONCRETE MIX)) 488490-MBE/DBE - OTHER SUPPORT ACTIVITIES FOR ROAD TRANSPORTATION (SPECIFICALLY: SNOW CLEARING, HIGHWAYS AND BRIDGES)

EXAMPLE

FREQUENTLY ASKED COMMON TERMS AS DEFINED IN THE MDOT MBE MANUAL

Common Terms as defined in the MDOT MBE Manual

Third Tier Contracting – The process in which a prime contractor subcontracts a portion of an original contract to a subcontractor who in turn subcontracts a portion of a subcontract to a third party. This latter action is termed entering into a third tier contract.

Supplier – a regular dealer, who owns, operates, or maintains a store, warehouse, or other establishment in which the materials or supplies required for the performance of a contract are placed, kept in stock, and regularly sold to the public in the usual course of business.
The supplier must perform a commercially useful function consistent with normal industry practices. To be a regular dealer, the firm must engage in, as its principal business, and in its own name, the purchase and the sale of the products in question.

A supplier of bulk goods (Cement, gravel, stone, and petroleum products) may qualify as a regular dealer if it either maintains an inventory or owns or operates distribution equipment. With respect to the distribution equipment (A fleet of trucks), the term "operates" is intended to cover a situation in which the supplier leases the equipment on a regular basis for its entire business. It is not intended to cover a situation in which the firm simply provides drivers for trucks owned or leased by another party, (such as a prime contractor) or leases such a party's trucks on an ad-hoc basis for a specific job.

Regular Dealer – A firm that owns, operates, or maintains a store, warehouse, or other establishment in which the materials or supplies required for the performance of the contract are bought, kept in stock, and regularly sold to the public in the usual course of business.
To be a regular dealer, the firm must engage in , as its principal business, and in its own name, the purchase and sale of the products in question. A regular dealer in such bulk items as cement, gravel, stone and petroleum need not keep such products in stock, if it owns or operates distribution equipment. Brokers and packagers shall not be regarded as manufacturers or regular dealers within the meaning of this section.

A regular dealer must be engaged in selling the product in question to the public. This is important in distinguishing a Regular Dealer, which has a regular trade with a variety of customers, from a firm which performs supply-like functions on an ad-hoc basis or for only one or two contractors with whom it has a special relationship.

A business that simply transfer title of a product from manufacturer to ultimate purchaser (e.g. broker or sales representative who re-invoices a product from the producing company to the recipient or contractor) or a firm that puts a product in a container for deliver would not be considered a Regular Dealer.

A supplier of bulk goods may qualify as a regular dealer if it either maintains an inventory or owns or operates distribution equipment. With respect to the distribution equipment (e.g. a fleet of trucks), the term "operates" is intended to cover a situation in which the supplier leases the equipment on a regular basis for its entire business. It is not intended to cover a situation in the firm simply provides drivers for trucks owned or leased by another party, (e.g., a prime contractor) or leases such as party's trucks on an ad-hoc basis for a specific job.

Manufacturer – A firm that produces a product from raw materials or substantially alters a previously manufactured product by operating or maintaining a factory or establishment that produces or alters on the premises.

Manufacturer Representative – A business that transfers title of a product from a manufacturer to an ultimate purchaser (e.g., a sales representative who invoices a product from the producing company to the contractors).

Broker – An agent of a buyer who sells stocks, bonds, commodities, or services, usually on a commission basis.

Commercially Useful Function – Work performed by a DBE/MBE in a particular transaction can be counted towards goals only if the Administration determines that it involves a commercially useful function. A certified business is considered to perform a commercially useful function when it is responsible for the execution of a distinct element of the work of a contract and carries out its responsibility by actually performing, managing and supervising the work involved. That is, in light of industry practices and other relevant considerations, the DBE/MBE must have a necessary and useful role in the transaction of a kind for which there is a superfluous step added in an attempt to obtain credit goals.

1 ADDENDUM NO. 1 SHEET NOS.
1, 2, 10, 11, 67, 82, 83, 113, 118A, 120,154A, 167, 169

2 ADDENDUM NO. 2 SHEET NOS.
1, 32, 160, 169

7 ADDENDUM NO. 7 SHEET NOS.
1, 52, 95, 119, 120, 125, 162, 169

8 ADDENDUM NO. 8 SHEET NOS.
1, 119, 123, 125, 156, 157, 158, 159, 160, 161, 162, 163, 164, 165, 166, 167, 168, 169,

ADDENDUM NO. 8
ADDENDUM NO. 7
ADDENDUM NO. 2
ADDENDUM NO. 1
MA-679-000-002

Maryland Transportation Authority

JOHN F. KENNEDY MEMORIAL HIGHWAY
THOMAS J. HATEM MEMORIAL BRIDGE

UPGRADE AND REPLACE EXISTING SIGNING NORTHERN REGION

BALTIMORE COUNTY / HARFORD COUNTY / CECIL COUNTY

CONTRACT NO.: MA-679-000-002

INDEX OF SHEETS

SHEET NO.	DWG. NO.	DESCRIPTION
8 7 2 1 1	-	TITLE SHEET
1 2	SN-1	GENERAL NOTES AND PROPOSALS
3-5	ESC-01 - ESC-03	EROSION AND SEDIMENT CONTROL NOTES
6-7	G-01 - G-02	SN-2 DRAWING KEY PLANS
7 2 1 8-93	SN-2.01 - SN-2.86	SIGNING PLANS
7 1 94-116	SN-3.01 - SN-3.23	GUIDE SIGN MESSAGES - DIMENSIONS AND DETAILS
1 117-118A	SN-4.01 - SN-4.03	GUIDE SIGN SUPPORTS
8 7 1 119-124	SN-8 - SN-8E	OVERHEAD SIGN STRUCTURE DETAILS
8 7 125	SN-9	CANTILEVER SIGN STRUCTURE DETAILS
126-129	D-01 - D-04	TRAFFIC BARRIER DETAILS
1 130-154A	E-01 - E-26	ELECTRICAL AND TRAFFIC BARRIER DETAILS
155	TCP-01	TRAFFIC CONTROL PLAN
8 7 2 1 156-169	SN-11.01 - SN-11.14	SIGNING QUANTITIES

LIMIT OF WORK:
I-95
NEW FORGE ROAD
MILEMARKER 69.7

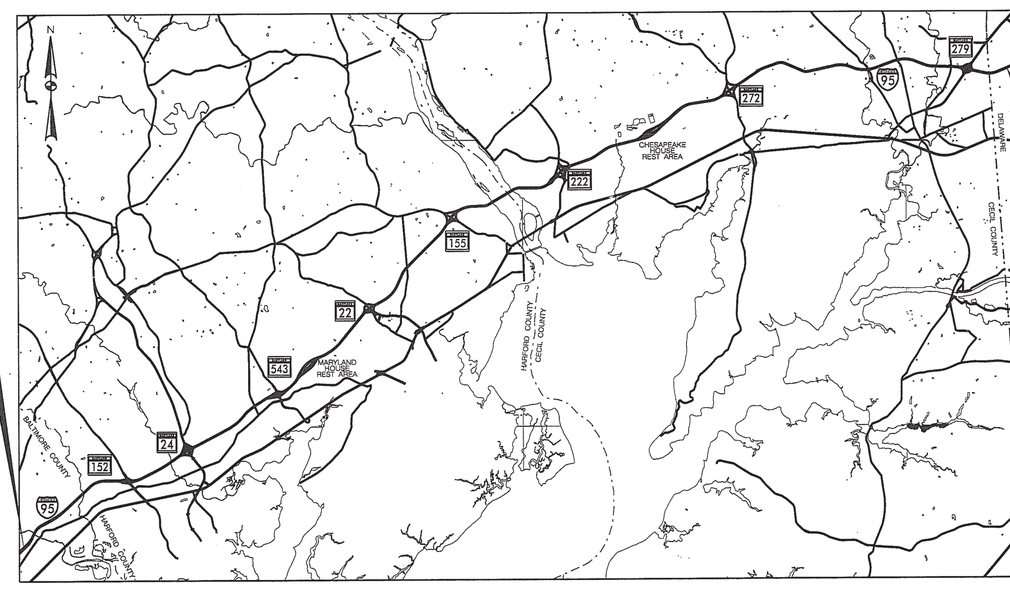

LIMIT OF WORK:
I-95
APPROXIMATELY 1 MILE
NORTH OF MARYLAND/
DELAWARE STATE LINE

LOCATION MAP
SCALE: 1"=13,000'

SABRA, WANG & ASSOCIATES, INC.
1504 JOH AVENUE
SUITE 160
BALTIMORE, MD 21227
(410) 737-8564
WWW.SABRA-WANG.COM

STRUCTURAL DESIGN

PROFESSIONAL CERTIFICATION:
I HEREBY CERTIFY THAT THESE DOCUMENTS WERE PREPARED OR APPROVED BY ME, AND THAT I AM A DULY LICENSED PROFESSIONAL ENGINEER UNDER THE LAWS OF THE STATE OF MARYLAND.
LICENSE NO. 14714
EXPIRATION DATE: 12-11-2009

STATE OF MARYLAND
DAVID HONG-HUEI WANG
No. 14714
REGISTERED
PROFESSIONAL ENGINEER

Whitman, Requardt and Associates, LLP
Engineers and Planners
801 South Caroline Street
Baltimore, Maryland 21231
410-235-3450

SIGNING AND ELECTRICAL DESIGN

PROFESSIONAL CERTIFICATION:
I HEREBY CERTIFY THAT THESE DOCUMENTS WERE PREPARED OR APPROVED BY ME, AND THAT I AM A DULY LICENSED PROFESSIONAL ENGINEER UNDER THE LAWS OF THE STATE OF MARYLAND.
LICENSE NO. 13488
EXPIRATION DATE: 06-14-2011

STATE OF MARYLAND
JOSEPH STEPHEN WANG
No. 13488
PROFESSIONAL ENGINEER

STANDARDS AND SPECIFICATIONS

THIS PROJECT SHALL BE CONSTRUCTED IN ACCORDANCE WITH THE MARYLAND STATE HIGHWAY ADMINISTRATION'S "STANDARDS FOR HIGHWAY AND INCIDENTAL CONSTRUCTION", THE MARYLAND DEPARTMENT OF TRANSPORTATION STATE HIGHWAY ADMINISTRATION'S "STANDARD SPECIFICATIONS FOR CONSTRUCTION AND MATERIALS, JULY 2008" AND ALL REVISIONS THEREOF. THE LATEST MANUAL ON UNIFORM TRAFFIC CONTROL DEVICES (MUTCD) AND AS SPECIFIED IN THE CONTRACT DOCUMENTS.

COMPLETENESS OF DOCUMENTS

THE MARYLAND TRANSPORTATION AUTHORITY SHALL ONLY BE RESPONSIBLE FOR THE COMPLETENESS OF DOCUMENTS OBTAINED DIRECTLY FROM THE MARYLAND TRANSPORTATION AUTHORITY'S CASHIER'S OFFICE. FAILURE TO ATTACH ADDENDA MAY CAUSE THE BID TO BE IRREGULAR.

ADA COMPLIANCE

THE DESIGN OF THIS PROJECT HAS INCORPORATED FACILITIES IN COMPLIANCE WITH THE STATE AND FEDERAL LEGISLATION

RIGHT OF WAY

RIGHT OF WAY AND EASEMENT LINES SHOWN ON THESE PLANS ARE FOR ASSISTANCE IN INTERPRETING THE PLANS. THEY ARE NOT OFFICIAL. FOR OFFICIAL FEE RIGHT OF WAY AND EASEMENT INFORMATION, SEE APPROPRIATE RIGHT OF WAY PLATS.

UTILITIES

THE LOCATION OF UTILITIES SHOWN ON THE PLANS ARE FOR INFORMATION AND GUIDANCE ONLY. NO GUARANTEE IS MADE OF THE ACCURACY OF SAID LOCATIONS. NOTIFICATION TO "MISS UTILITY", (800) 257-7777, AND THE JFK SPECIAL PROJECTS SUPERVISOR, DAN SAWYERS AT (410) 537-1118 SHALL BE GIVEN 72 HOURS (THREE FULL WORKING DAYS) IN ADVANCE OF EXCAVATING OR SIMILAR WORK IS TO BE PERFORMED.

ENVIRONMENTAL INFORMATION

MDE # 10 -SF- 0185

SEDIMENT AND EROSION CONTROL REGULATIONS WILL BE STRICTLY ENFORCED DURING CONSTRUCTION. THE CONTRACTOR SHALL APPLY ALL EROSION AND SEDIMENT CONTROL MEASURES TO ALL ERODIBLE MATERIALS EXPOSED BY ANY ACTIVITY ON THE PROJECT. THESE MEASURES SHALL BE COORDINATED WITH OTHER ON-GOING CONSTRUCTION ACTIVITIES. THE CONTRACTOR SHALL COMPLY WITH ALL APPLICABLE PROVISIONS OF SECTION 308 OF THE SPECIFICATIONS.

OWNERS/DEVELOPERS CERTIFICATION:

I / WE HEREBY CERTIFY THAT ALL CLEARING, GRADING, CONSTRUCTION AND/OR DEVELOPMENT WILL BE DONE PURSUANT TO THIS PLAN AND THAT ANY RESPONSIBLE PERSONNEL INVOLVED IN THE CONSTRUCTION PROJECT WILL HAVE A CERTIFICATE OF ATTENDANCE AT A MARYLAND DEPARTMENT OF THE ENVIRONMENT APPROVED TRAINING PROGRAM FOR THE CONTROL OF EROSION AND SEDIMENT BEFORE BEGINNING THE PROJECT. I HEREBY AUTHORIZE THE RIGHT OF ENTRY FOR PERIODIC ON-SITE EVALUATION BY STATE OF MARYLAND, DEPARTMENT OF THE ENVIRONMENT, COMPLIANCE INSPECTORS.

12/3/09 — DATE
OWNER / DEVELOPER SIGNATURE

165 — CARD NO.
DOUGLAS NOVOCIN, ENVIRONMENTAL MANAGER — PRINTED NAME AND TITLE

MARYLAND TRANSPORTATION AUTHORITY

RECOMMENDED FOR APPROVAL
DIRECTOR, ENGINEERING DIVISION — DATE 12-9-09

APPROVED
CHIEF ENGINEER, OFFICE OF ENGINEERING AND CONSTRUCTION — DATE 01/10/10

APPROVED
EXECUTIVE SECRETARY — DATE 1/14/10

DRILL HOLES

DRILL HOLES

DRILL HOLES

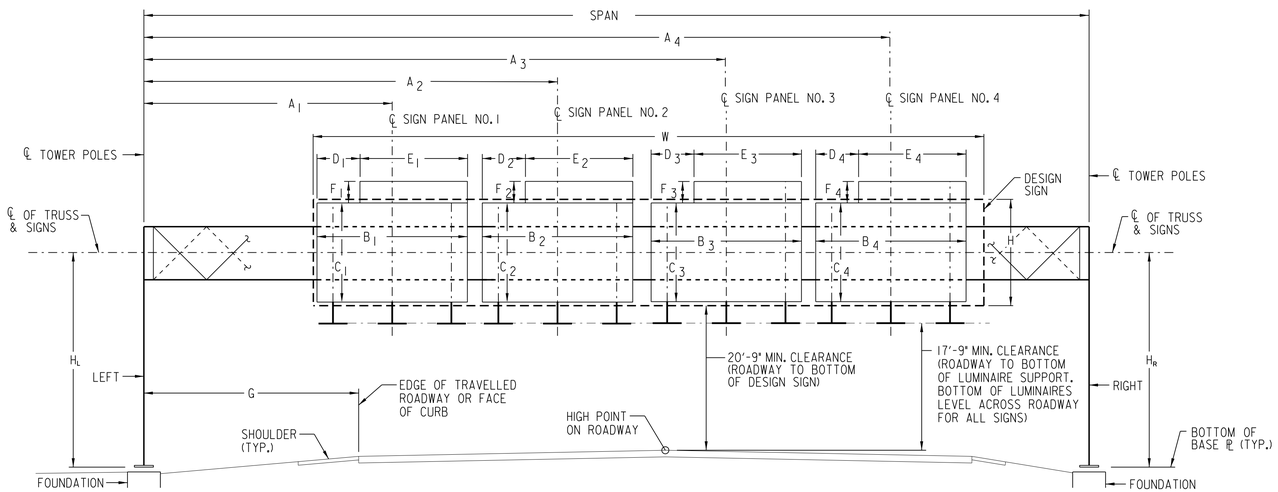

ELEVATION OF OVERHEAD SIGN STRUCTURE
DIRECTION OF TRAFFIC

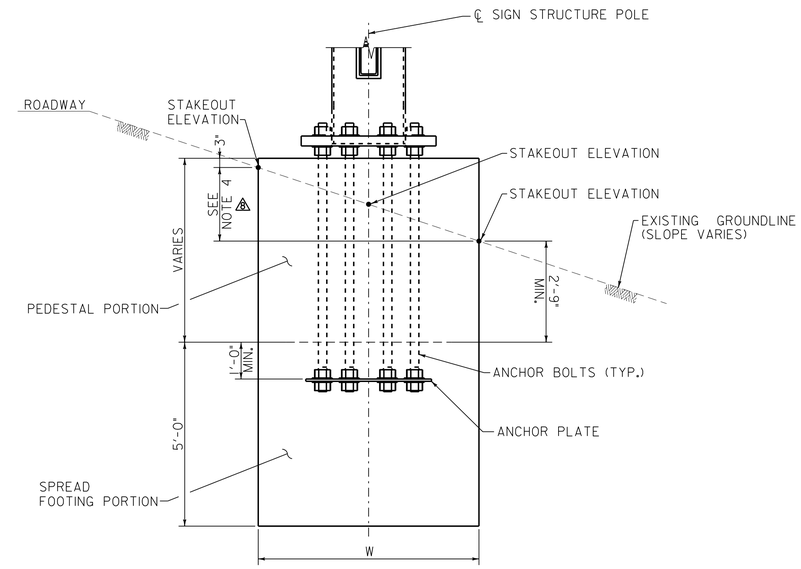

OVERHEAD SPAN FOUNDATION - SECTION
(SUPPLEMENT WITH STD. NO. MD 803.08-20)

NOTES:

1. FILL SLOPE SHOWN, FOR CUT SLOPES, DETAIL IS MIRRORED.
2. WORK THIS DETAIL WITH THE APPLICABLE SHA STANDARD DETAILS AND 803.03 OF THE SPECIFICATIONS.
3. REINFORCEMENT STEEL NOT SHOWN FOR CLARITY. REFER TO THE APPLICABLE SHA STANDARD DETAILS.
4. ⚠4 CHANGE IN GROUNDLINE AT FOUNDATION LISTED BELOW AS "GROUNDLINE △". INFORMATION IS APPROXIMATE ONLY. CONTRACTOR IS RESPONSIBLE FOR VERIFYING INFORMATION THROUGH CONSTRUCTION STAKEOUT IN ORDER TO MEET ALL APPLICABLE REQUIREMENTS.

OVERHEAD SIGN STRUCTURE

SIGN STRUCTURE NO.	STRUCTURE MARK	SPAN	SIGN PANEL LOCATIONS																								TOWER DIMENSION			DESIGN SIGN SIZE	FOUNDATION			C.Y. CONC.	LOCATION	REMARKS	GROUND LINE △ ⚠4
			PANEL NO. 1						PANEL NO. 2						PANEL NO. 3						PANEL NO. 4									W x H	MARK	FOOTING TYPE					
			A_1	B_1	C_1	D_1	E_1	F_1	A_2	B_2	C_2	D_2	E_2	F_2	A_3	B_3	C_3	D_3	E_3	F_3	A_4	B_4	C_4	D_4	E_4	F_4	H_L	H_R	G			LEFT TOWER	RIGHT TOWER				
OH-7	OH-95-36A	92'-0"	40'-0"	10'-0"	10'-0"	-	-	-	66'-0"	20'-0"	15'-0"	8'-0"	12'-0"	3'-0"	-	-	-	-	-	-	-	-	-	-	-	-	29'-9"	33'-4"	22'-0"	48' (W) X 16' (H)	OF-626	A	A	76.36 ⚠4	I-95 SB, 580' SOUTH OF EXISTING OVERHEAD STR.		0' LT; 2.0' RT

• +12'(W) x 3'(H) EXIT PANEL

GENERAL NOTES:

1. REFER TO CONTRACT PROPOSAL AND MD. STANDARD SPECIFICATIONS FOR CONSTRUCTION AND MATERIALS FOR MATERIAL, CONSTRUCTION SPECIFICATIONS AND DETAILS.
2. REFER TO ROADWAY LIGHTING PLANS FOR LIGHTING CHARTS.
3. ANY ALTERNATE DESIGN SHALL BE STRUCTURALLY EQUIVALENT AND SUBJECT TO APPROVAL BY THE ENGINEER.
4. ALL ALTERNATE DESIGNS MUST BE SIMILAR TO THE DESIGN SHOWN ON THE PLANS.
5. ALTERNATE DESIGNS MAY BE REJECTED BY THE ENGINEER FOR ANY REASON, INCLUDING REASONS NOT RELATED TO STRUCTURAL EQUIVALENCY.
6. ACTUAL STRUCTURE HEIGHT "H" SHALL NOT BE LESS THAN 20'-9" + ½ x DESIGN SIGN HEIGHT + ELEVATION DIFFERENCE BETWEEN HIGH POINT OF ROADWAY AND TOP OF FOUNDATION.
7. ALL SIGN SUPPORTS SHALL BE LOCATED BEHIND PHYSICAL TRAFFIC BARRIERS.
8. ALL ANCHOR BOLTS SHALL MEET THE REQUIREMENTS OF F1554, GRADE 55 SI.
9. STEEL TEMPLATES SHALL BE USED TO SET ANCHOR BOLTS PLUMB WHEN POURING THE FOUNDATION.
10. ALL ANCHOR BOLTS SHALL BE PLUMB AFTER FOUNDATION INSTALLATION.
11. ALL CONNECTION BOLTS SHALL MEET THE REQUIREMENTS OF ASTM A325 (BOLTS OVER 1½" DIA. ASTM A449), WASHERS F436 AND NUTS A194 GRADE 2 OR 2H. THE BOLTS SHALL HAVE A FLAT WASHER UNDER THE ELEMENT TO BE TURNED.
12. USE LOCK NUTS AND FLAT WASHERS FOR ALL "U" BOLTS (A307 OR EQUIVALENT).
13. BASE PLATE SHALL BE IN FULL CONTACT WITH ALL FLAT WASHERS.
14. GROUT SHALL NOT BE PLACED BETWEEN THE BASE PLATE AND CONCRETE TOP.
15. FOR ALL STRUCTURAL DETAILS, SINGLE SPAN LENGTHS UP TO 140 FEET, SEE STANDARDS NO. MD-803.04 THRU. MD-803.08-23.

WR&A
Whitman, Requardt and Associates, LLP
Engineers and Planners
801 S. Caroline Street
Baltimore, Maryland 21231
(410) 235-3450

Maryland Transportation Authority
Engineering Division

ADDENDUMS & REVISIONS

NO.	DESCRIPTION	BY	DATE
1	SHEET REVISED	NML	8/13/10
2	SHEET REVISED	NML	8/26/10

M:\3150903\NorthernRegion\I95\sn8_MA679.dgn OCTOBER 2009

UPGRADE AND REPLACE EXISTING SIGNING NORTHERN REGION
JOHN F. KENNEDY MEMORIAL HIGHWAY
THOMAS J. HATEM MEMORIAL BRIDGE
OVERHEAD SIGN STRUCTURE

DESIGNED BY D.S. DRAWN BY D.S. CHECKED BY S.N.
CONST. REVIEW BY DATE OCTOBER 2009 SCALE N.T.S.

CONTRACT NO. MA-679-000-002
DRAWING NO. SN-8
SHEET NO. 119 OF 169

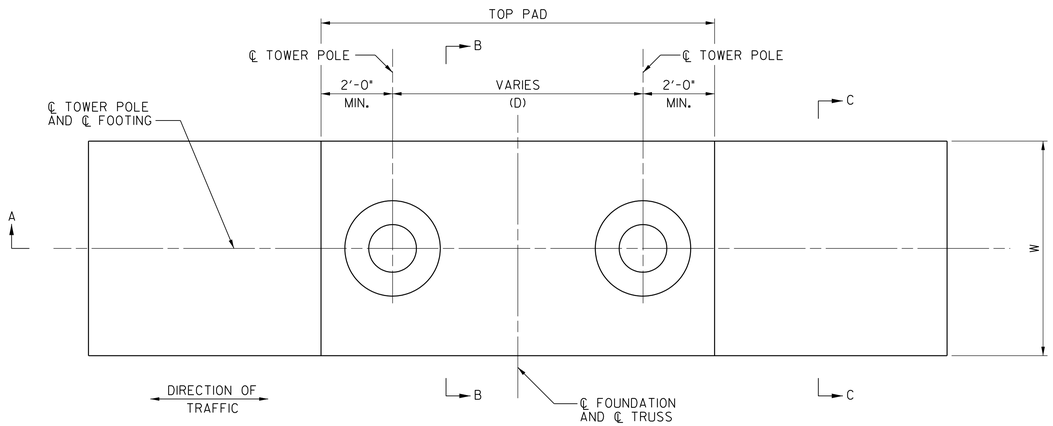

FOUNDATION PLAN - TYPE 'A'
SCALE: 1/2" = 1'-0"

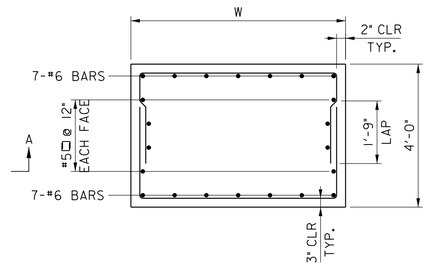

SECTION C-C
SCALE: 1/2" = 1'-0"

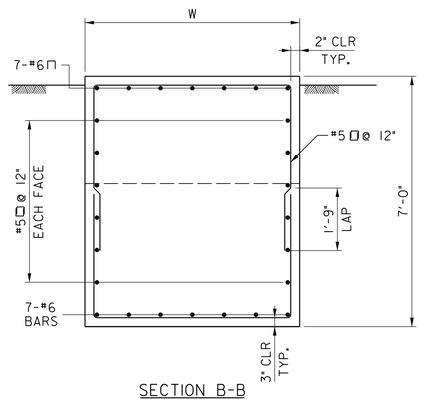

SECTION B-B
SCALE: 1/2" = 1'-0"

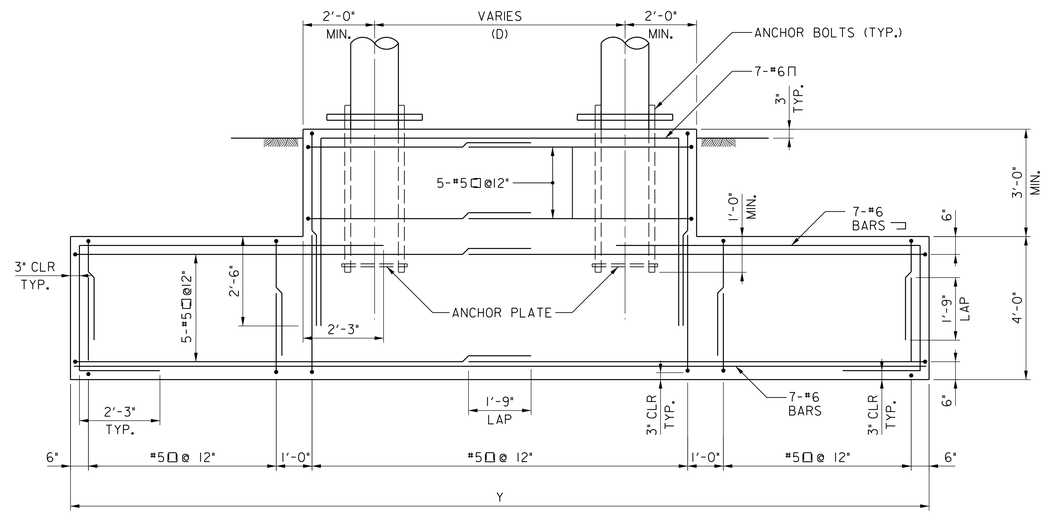

SECTION A-A
SCALE: 1/2" = 1'-0"

FOUNDATION NOTES:

1. REFER TO THE CONTRACT SPECIFICATIONS AND MD STANDARD SPECIFICATIONS FOR CONSTRUCTION AND MATERIALS (JANUARY 2001) FOR MATERIAL, CONSTRUCTION SPECIFICATIONS AND DETAILS.
2. SIGN STRUCTURES DESIGNED IN ACCORDANCE WITH AASHTO "STANDARD SPECIFICATIONS FOR STRUCTURAL SUPPORTS FOR HIGHWAY SIGNS, LUMINAIRES, AND TRAFFIC SIGNALS" DATED 2001 INCLUDING ALL INTERIM SPECIFICATIONS THROUGH 2003.
3. CONCRETE DESIGN: SERVICE LOAD DESIGN METHOD, fc = 1200 PSI.
4. REINFORCING STEEL DESIGN: fs = 24,000 PSI.
5. ALL CONCRETE FOR THE SIGN STRUCTURE FOUNDATIONS SHALL BE MIX NO. 3 (3500 PSI).
6. REINFORCING STEEL SHALL CONFORM TO ASTM A 615, GRADE 60. ALL SPLICES, NOT SHOWN, SHALL BE LAPPED AS PER BAR LAP CHARTS, MINIMUM COVER FOR ANY BAR SHALL BE 2" UNLESS OTHERWISE NOTED, WITH THE EXCEPTION OF BARS AT THE BOTTOM AND SIDES ALL FOOTINGS WHICH SHALL HAVE 3" MINIMUM COVER.

   FOR TIES AND STIRRUPS: STANDARD ACI BENDING TOLERANCES ARE MODIFIED TO PLUS (+) ZERO INCHES, MINUS (-) NORMAL ACI BENDING TOLERANCES.

   ONLY GRADE 60 CAN BE USED ON THIS PROJECT.

   REINFORCING STEEL IN THE FOLLOWING AREAS SHALL BE EPOXY COATED:

   - PARAPET PORTION OF THE SIGN STRUCTURE FOUNDATIONS.
   - FOUNDATION PEDESTALS CLOSER THAN 12 FEET FROM THE TRAVELING LANE.
7. ALL DIMENSIONS AND ELEVATIONS AFFECTED BY THE GEOMETRICS, AND/OR LOCATION OF THE EXISTING STRUCTURE AND FACILITIES SHALL BE CHECKED IN THE FIELD BY THE CONTRACTOR, BEFORE ANY CONSTRUCTION IS DONE, AND BEFORE ANY REINFORCING STEEL, ETC., IS ORDERED OR FABRICATED. IT SHALL BE THE RESPONSIBILITY OF THE CONTRACTOR TO SUPPLY THE ENGINEER WITH ALL FIELD DIMENSIONS REQUIRED TO CHECK DETAIL DRAWINGS.

△8. SEE DRAWING NO. SN-8, OVERHEAD SPAN FOUNDATION - SECTION FOR ADDITIONAL FOUNDATION DETAILS. CHANGE IN GROUNDLINE AT FOUNDATION LISTED BELOW AS "GROUNDLINE △". INFORMATION IS APPROXIMATE ONLY. CONTRACTOR IS RESPONSIBLE FOR VERIFYING INFORMATION THROUGH CONSTRUCTION STAKEOUT IN ORDER TO MEET ALL APPLICABLE REQUIREMENTS.

FOUNDATION DETAIL SCHEDULE

SIGN DESIGNATION	FOOTING DIMENSION			FOOTING TYPE	△8 CONC. QUANTITY	△8 GROUND LINE △
	W	Y	D		CY	
DMS-1	6'-0"	22'-0"	6'-3"	A	60.36	0.33' LT; 3.0' RT
DMS-2	6'-0"	22'-0"	6'-3"	A, B	61.22	0' LT; 1.17' RT
DMS-3	6'-0"	22'-0"	6'-3"	A	58.3	0.67' LT; 1.75' RT
DMS-4	6'-0"	22'-0"	6'-3"	A	60.18	1.42' LT; 1.83' RT
DMS-5	6'-0"	20'-0"	6'-3"	A	57.01	1.25' LT; 2.17' RT
DMS-6	6'-0"	20'-0"	6'-3"	A	55.49	0.5' LT; 2.25' RT
DMS-7	6'-0"	20'-0"	6'-3"	A	57.19	0.5' LT; 3.0' RT
DMS-8	6'-0"	20'-0"	6'-3"	A	60.22	1.0' LT; 3.83' RT
DMS-9	6'-0"	20'-0"	6'-3"	A	57.95	1.5' LT; 2.33' RT
DMS-10	6'-0"	20'-0"	6'-3"	A	57.2	2.0' LT; 1.5' RT
DMS-11	6'-0"	18'-0"	6'-3"	A	47.55	0' LT; 0.83' RT
DMS-12	6'-0"	18'-0"	6'-3"	A	50.43	0.92' LT; 1.17' RT
DMS-13	6'-0"	20'-0"	6'-3"	A	58.51	0.58' LT; 3.5' RT
DMS-14	6'-0"	22'-0"	6'-3"	A	58.66	0.33' LT; 2.25' RT
DMS-15	6'-0"	18'-0"	6'-3"	A	48.51	0.83' LT; 0.42' RT

NOTES:

1. MAXIMUM DESIGN BEARING PRESSURE AT THE SIGN STRUCTURE FOUNDATIONS ARE 2.5 K/SFT.
2. PVC CONDUIT BENDS SHALL BE PROVIDED IN CONFORMANCE WITH STANDARD NO. MD 803.08.

REFERENCE NOTES:

1. FOR SIGN STRUCTURES GENERAL NOTES, SEE DWG. NO. SN-8A.
2. FOR OVERHEAD SIGN STRUCTURE FOUNDATIONS TYPE B, SEE DWG. NO. SN-8E.

WR&A
Whitman, Requardt and Associates, LLP
Engineers and Planners
801 S. Caroline Street
Baltimore, Maryland 21231
(410) 235-3450

Maryland Transportation Authority
Engineering Division

ADDENDUMS & REVISIONS

NO.	DESCRIPTION	BY	DATE
△8	SHEET REVISED	NML	8/26/10

$DGNNAME$ OCTOBER 2009

UPGRADE AND REPLACE EXISTING SIGNING NORTHERN REGION
JOHN F. KENNEDY MEMORIAL HIGHWAY
THOMAS J. HATEM MEMORIAL BRIDGE
DMS SIGN STRUCTURE
FOUNDATIONS - TYPE A

DESIGNED BY S.N./D.S. DRAWN BY D.S. CHECKED BY K.S.
CONST. REVIEW BY DATE OCTOBER 2009 SCALE AS SHOWN

CONTRACT NO. MA-679-000-002
DRAWING NO. SN-8D
SHEET NO. 123 OF 169

DRILL HOLES

DRILL HOLES

DRILL HOLES

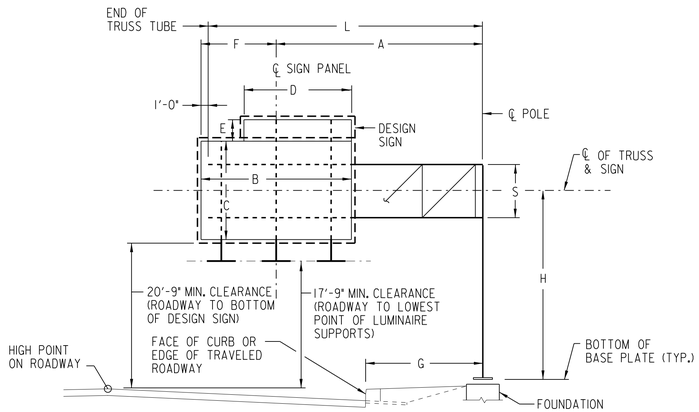

ELEVATION OF CANTILEVER SIGN SUPPORT – SINGLE PANEL
DIRECTION OF TRAFFIC

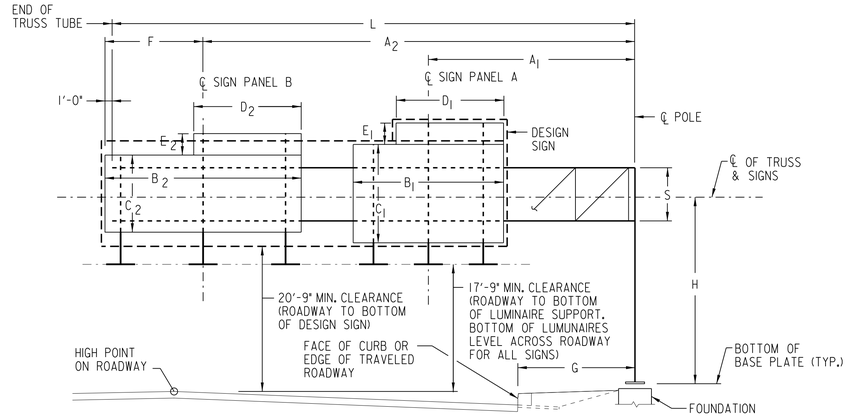

ELEVATION OF CANTILEVER SIGN SUPPORT – DOUBLE PANEL
DIRECTION OF TRAFFIC

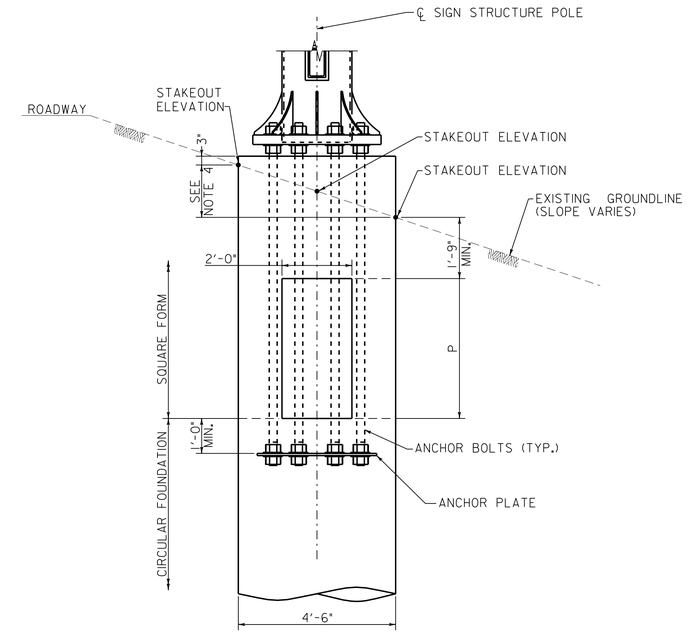

TYPE A CANTILEVER FOUNDATION - SECTION
(SUPPLEMENT WITH STD. NO. MD 803.07-01)

NOTES:

1. FILL SLOPE SHOWN. FOR CUT SLOPES, DETAIL IS MIRRORED.
2. WORK THIS DETAIL WITH THE APPLICABLE SHA STANDARD DETAILS AND 803.03 OF THE SPECIFICATIONS.
3. REINFORCEMENT STEEL NOT SHOWN FOR CLARITY. REFER TO THE APPLICABLE SHA STANDARD DETAILS.
4. △8 CHANGE IN GROUNDLINE AT FOUNDATION LISTED BELOW AS "GROUNDLINE △". INFORMATION IS APPROXIMATE ONLY. CONTRACTOR IS RESPONSIBLE FOR VERIFYING INFORMATION THROUGH CONSTRUCTION STAKEOUT IN ORDER TO MEET ALL APPLICABLE REQUIREMENTS.

CANTILEVER SIGN SUPPORT – SINGLE PANEL △8 △8

SIGN STRUCTURE NO.	STRUCTURE MARK	STRUCTURE DIMENSIONS			SIGN PANEL							DESIGN SIGN SIZE W x H	FOUNDATION			LOCATION	GROUND LINE △
		H	S	L	A	B	C	D	E	F	G••		MARK	TYPE	C.Y. CONC.		
C-17	C-45-32-E	31'-2"	4'-0"	40'-0"	26'-6"	29'-0"	13'-0"	-	-	14'-6"	20'-0"	28' (W) X 16' (H)	CF-23	A	16.34	MD 155 WB, 210' WEST OF EXISTING GROUND MOUNTED SIGN	0.58'
C-19	C-40-30-E	29'-5"	4'-0"	40'-0"	29'-0"	24'-0"	12'-0"	12'-0"	3'-0"	12'-0"	20'-0"	26' (W) X 16' (H)	CF-20	A	14.65	I-95 SB, 100' NORTH OF EXISTING BRIDGE	0.33'
C-42	C-30-30-A	28'-6"	4'-0"	26'-0"	20'-6"	13'-0"	10'-0"	-	-	6'-6"	15'-0"	18' (W) X 16' (H)	CF-11	A	13.25	MD 279 SB, 46' NORTH OF EXISTING BRIDGE	1.0'
C-43	C-25-30-A	27'-8"	4'-0"	23'-0"	17'-6"	13'-0"	10'-0"	-	-	6'-6"	11'-0"	16' (W) X 16' (H)	CF-5	A	8.6	MD 279 NB, 30' SOUTH OF EXISTING BRIDGE	-
C-49	C-40-32-E	30'-10"	4'-0"	37'-0"	26'-0"	23'-0"	15'-0"	12'-0"	3'-0"	11'-6"	20'-0"	26' (W) X 16' (H)	CF-22	A	15.38	I-95 NB, 30' NORTH OF EXISTING MILE MARKER	0.5'
C-50	C-45-32-C	30'-0"	4'-0"	45'-0"	34'-0"	24'-0"	9'-0"	-	-	12'-0"	23'-0"	23' (W) X 16' (H)	CF-21	A	16.8	I-95 NB, 185' NORTH OF EXISTING MILE MARKER	2.0'

• +12'(W) x 3'(H) EXIT PANEL
•• 'G' DIMENSION FROM EDGE OF TRAVEL LANE/FACE OF CURB/FLOW LINE OF CONCRETE BARRIER TO CENTERLINE OF POLE

CANTILEVER SIGN SUPPORT – DOUBLE PANEL △8 △8

SIGN STRUCTURE NO.	STRUCTURE MARK	STRUCTURE DIMENSIONS			SIGN PANEL												DESIGN SIGN SIZE W x H	FOUNDATION			LOCATION	GROUND LINE △
					PANEL A					PANEL B												
		H	S	L	A_2	B_1	C_1	D_1	E_1	A_2	B_2	C_2	D_2	E_2	F	G••		MARK	TYPE	C.Y. CONC.		
C-46	C-45-32-E	29'-6"	4'-0"	45'-0"	26'-0"	14'-0"	12'-0"	14'-0"	3'-0"	40'-6"	11'-0"	11'-0"	-	-	5'-6"	19'-0"	28' (W) X 16' (H)	CF-23	A	15.9	I-95 SB, 15' SOUTH OF EXISTING CANTILEVER STR.	-
C-51	C-45-32-E	30'-10"	4'-0"	45'-0"	21'-0"	14'-0"	12' 0"	14'-0"	3'-0"	38'-0"	16'-0"	11'-0"	-	-	8'-0"	20'-7"	28' (W) X 16' (H)	CF-23	A	17.59	I-95 SB, 740' SOUTH OF EXISTING DMS #838 IN DE	2.25'
C-52	C-45-32-E	29'-6"	4'-0"	45'-0"	17'-0"	14'-0"	10' 0"	-	-	36'-0"	20'-0"	10'-0"	12'-0"	3'-0"	10'-0"	20'-0"	28' (W) X 16' (H)	CF-23	A	15.9	I-95 SB, 35' SOUTH OF EXISTING CANTILEVER STRUCTURE	-

• +12'(W) x 3'(H) EXIT PANEL
•• 'G' DIMENSION FROM EDGE OF TRAVEL LANE/FACE OF CURB/FLOW LINE OF CONCRETE BARRIER TO CENTERLINE OF POLE

GENERAL NOTES:

1. REFER TO CONTRACT PROPOSAL AND MD. STANDARD SPECIFICATIONS FOR CONSTRUCTION AND MATERIALS FOR MATERIAL, CONSTRUCTION SPECIFICATIONS AND DETAILS.
2. REFER TO ROADWAY LIGHTING PLANS FOR LIGHTING CHARTS.
3. ANY ALTERNATE DESIGN SHALL BE STRUCTURALLY EQUIVALENT AND SUBJECT TO APPROVAL BY THE ENGINEER.
4. ALL ALTERNATE DESIGNS MUST BE SIMILAR TO THE DESIGN SHOWN ON THE PLANS.
5. ALTERNATE DESIGNS MAY BE REJECTED BY THE ENGINEER FOR ANY REASON, INCLUDING REASONS NOT RELATED TO STRUCTURAL EQUIVALENCY.
6. ACTUAL STRUCTURE HEIGHT "H" SHALL NOT BE LESS THAN 20'-9" + ½ x DESIGN SIGN HEIGHT ± ELEVATION DIFFERENCE BETWEEN HIGH POINT OF ROADWAY AND TOP OF FOUNDATION.
7. ALL SIGN STRUCTURE SUPPORTS SHALL BE LOCATED BEHIND PHYSICAL TRAFFIC BARRIERS.
8. ALL ANCHOR BOLTS SHALL MEET THE REQUIREMENTS OF F1554, GRADE 55 SI.
9. STEEL TEMPLATES SHALL BE USED TO SET ANCHOR BOLTS PLUMB WHEN POURING THE FOUNDATION.
10. ALL ANCHOR BOLTS SHALL BE PLUMB AFTER FOUNDATION INSTALLATION.
11. ALL CONNECTION BOLTS SHALL MEET THE REQUIREMENTS OF ASTM A325 (BOLTS OVER 1½" DIA. ASTM A449), WASHERS F436 AND NUTS A194 GRADE 2 OR 2H. THE BOLTS SHALL HAVE A FLAT WASHER UNDER THE ELEMENT TO BE TURNED.
12. USE LOCK NUTS AND FLAT WASHERS FOR ALL "U" BOLTS (A307 OR EQUIVALENT).
13. BASE PLATE SHALL BE IN FULL CONTACT WITH ALL FLAT WASHERS.
14. GROUT SHALL NOT BE PLACED BETWEEN THE BASE PLATE AND CONCRETE TOP.
15. FOR ALL STRUCTURAL DETAILS, SEE STANDARDS NO. MD-803.04 THRU. MD-803.08-23.

WR&A
Whitman, Requardt and Associates, LLP
Engineers and Planners
801 S. Caroline Street
Baltimore, Maryland 21231
(410) 235-3450

Maryland Transportation Authority
Engineering Division

ADDENDUMS & REVISIONS

NO.	DESCRIPTION	BY	DATE
△1	SHEET REVISED	NML	8/13/10
△8	SHEET REVISED	NML	8/26/10

M:\3150903\NorthernRegion\I95\sn9_MA679.dgn OCTOBER 2009

UPGRADE AND REPLACE EXISTING SIGNING NORTHERN REGION
JOHN F. KENNEDY MEMORIAL HIGHWAY
THOMAS J. HATEM MEMORIAL BRIDGE
CANTILEVER SIGN STRUCTURE

DESIGNED BY D.S. DRAWN BY D.S. CHECKED BY S.N.
CONST. REVIEW BY _____ DATE OCTOBER 2009 SCALE N.T.S.

CONTRACT NO. MA-679-000-002
DRAWING NO. SN-9
SHEET NO. 125 OF 169

SHEET NO.	SIGN NO.	REMARKS	CODE NUMBERS 1	2	3	4	5	6	7	8	9	10	11	12	13	14	15	16	17	18	19	20	21	22	23	24	25	26	27	28	29	30
SN-2.01	1	DMS#1, DMS-1a/b 2-1-3(1) (42"x24") INSTALL ON NEW OVERHEAD STRUCTURE	60.36	14										2																		
SN-2.01	2	GM-131(84"x16"),OM-3(1)R BLK/FY(24"x48") SQUARE PERFORATED TUBULAR STEEL SIGN POST & ANCHOR BASE	8	17.33		2																										
SN-2.01	25	GM-132(84"x16"),OM-3(1)R BLK/FY(24"x48") SQUARE PERFORATED TUBULAR STEEL SIGN POST & ANCHOR BASE		17.33		2																										
SN-2.01	28	GM-133 (108"x36"), OM-3(R) BLK/FY (12"x36") 2-4"X6"		30			32																									
SN-2.01	33	GM-134 (108"x36"), OM-3(R) BLK/FY (12"x36") 2-4"X6"		30			32																									
SN-2.01		ITEM NOS. 9, 10 & 26									62	2																18.67				
SN-2.02	39	GM-135 (60"x16") SQUARE PERFORATED TUBULAR STEEL SIGN POST AND ANCHOR BASE		6.67		2																										
SN-2.02	40	OM-3(1)L BLK/FY (24"x48") SQUARE PERFORATED TUBULAR STEEL SIGN POST AND ANCHOR BASE		8		1																										
SN-2.02	47	OM-3(1)L BLK/FY (24"x48") SQUARE PERFORATED TUBULAR STEEL SIGN POST AND ANCHOR BASE		8		1																										
SN-2.02	48	GM-136 (60"x16") SQUARE PERFORATED TUBULAR STEEL SIGN POST AND ANCHOR BASE		6.67		2																										
SN-2.02	60	GM-137 R4-5(4) (48"x96) 1-6"x8"		32					22																							
SN-2.02	61	GM-138 R4-5(4) (48"x96) 2-6"x6"		32				44																								
SN-2.02	66	GM-139 R4-5(4) (48"x96) 1-6"x8"		32					22																							
SN-2.02	67	GM-140 R4-5(4) (48"x96) 1-6"x8"		32					22																							
SN-2.02		ITEM NO. 9									202.7917																					
SN-2.03	78	W11-8 BLK/FY (48"x48") SQUARE PERFORATED TUBULAR STEEL SIGN POST AND ANCHOR BASE		16		2																										
SN-2.03	79	W11-8 BLK/FY (48"x48") SQUARE PERFORATED TUBULAR STEEL SIGN POST AND ANCHOR BASE		16		2																										
SN-2.03	84	OM-3(1)L BLK/FY (24"x48") BAND SIGN TO BRIDGE PIER		8										1																		
SN-2.03	85	GM-141(78"x16"),OM-3(1)R BLK/FY(24"x48") SQUARE PERFORATED TUBULAR STEEL SIGN POST & ANCHOR BASE		16.67		2																										
SN-2.03	93	OM-3(1)L BLK/FY (24"x48") BAND SIGN TO BRIDGE PIER		8										1																		
SN-2.03	94	GM-142(78"x16"),OM-3(1)R BLK/FY(24"x48") SQUARE PERFORATED TUBULAR STEEL SIGN POST & ANCHOR BASE		16.67		2																										
SN-2.03	105	R2-1 (48"x60") 1-TS 6x4x3/8 GALVANIZED POST (16.5 LF)		20																												
SN-2.03	106	R2-1 (48"x60") 2-4"x6"		20			36																									
SN-2.03	110	W11-8 BLK/FY (48"x48") 1-TS 6x4x3/8 GALVANIZED POST (17 LF)		16																												
SN-2.03	111	W11-8 BLK/FY (48"x48") SQUARE PERFORATED TUBULAR STEEL SIGN POST AND ANCHOR BASE		16		2																										
SN-2.03		ITEM NOS. 9 & 26									22																	16				
SN-2.04	112	GM-107 (10'x8') 2-W6x15 GALVANIZED STEEL BEAMS	2.4		80																											36
SN-2.04	114	OM-3(R) BLK/FY (12"x36") SQUARE PERFORATED TUBULAR STEEL SIGN POST AND ANCHOR BASE		3		1																										
SN-2.04	117	R2-1 (48"x60") 1-TS 6x4x3/8 GALVANIZED POST (16.5 LF)		20																												
SN-2.04	118	R2-1 (48"x60") 2-4"x6"		20			36																									
SN-2.04	126	GM-108 (10'x8') 2-W6x15 GALVANIZED STEEL BEAMS	2.4		80																											38
SN-2.04	128	C-1 (12'x12') & (12'x3') INSTALL ON EXISTING CANTILEVER STRUCTURE			180																								36			
SN-2.04	134	C-2 (12'x12') & (12'x3') INSTALL ON EXISTING CANTILEVER STRUCTURE			180																								36			
SN-2.04	136	OM-3(1)L BLK/FY (24"x48") BAND SIGN TO BRIDGE PIER		8										1																		
SN-2.04	137	GM-145(78"x16"),OM-3(1)R BLK/FY(24"x48") SQUARE PERFORATED TUBULAR STEEL SIGN POST & ANCHOR BASE		16.67		2																										
SN-2.04	138	OM-3(1)L BLK/FY (24"x48") BAND SIGN TO BRIDGE PIER		8										1																		
SN-2.04	139	GM-146(78"x16"),OM-3(1)R BLK/FY(24"x48") SQUARE PERFORATED TUBULAR STEEL SIGN POST & ANCHOR BASE		16.67		2																										
SN-2.04	142	R2-1 (48"x60") 1-TS 6x4x3/8 GALVANIZED POST (16.5 LF)		20																												
SN-2.04	143	R2-1 (48"x60") 2-4"x6"		20			36																									
SN-2.04	145	R4-5(4) (48"x96) 1-TS 6x4x3/8 GALVANIZED POST (19.5 LF)		32																												
SN-2.04	146	GM-144 R4-5(4) (48"x96) 2-6"x6"		32				44																								
SN-2.04	150	GM-1 (15'x7') 2-W6x15 GALVANIZED STEEL BEAMS	2.4		105																								14			29
SN-2.04	1915	GM-252 (12'x9'), 1-5 (30"x30") 2-W8x18 GALVANIZED STEEL BEAMS	2.8	6.25	108									1		2					38.5											
SN-2.04	1931	OM-3(R) BLK/FY (12"x36") SQUARE PERFORATED TUBULAR STEEL SIGN POST AND ANCHOR BASE		3		1																										
SN-2.04		ITEM NOS. 8 & 9								432	296																					
SN-2.05	3	W13-2 BLK/FY (48"x60") 2-4"x6"		20			36																									
SN-2.05	156	W9-2(2)L BLK/FY (60"x60"), W9-2(3)L BLK/FY (48"x36") 1-6"x8"		37					24																							
SN-2.05	158	W4-2R BLK/FY (48"x48") SQUARE PERFORATED TUBULAR STEEL SIGN POST AND ANCHOR BASE		16		2																										
SN-2.05	160	W9-2(2)L BLK/FY (60"x60"), W9-2(3)L BLK/FY (48"x36") 1-6"x8"		37					24																							
SN-2.05	164	M3-3(30"x15"),M1-1(36"x36"),R95-3(24"x24") SQUARE PERFORATED TUBULAR STEEL SIGN POST & ANCHOR BASE	8	16.125		2																										
SN-2.05	165	DMS#2, DMS-2a/b 2-1-3(1) (42"x24") INSTALL ON NEW OVERHEAD STRUCTURE	61.22	14										2																		
SN-2.05		ITEM NOS. 9 & 10									106.125	1																				
SUBTOTALS FOR SN-11.01			131.58 8	765.055	733	30	208	88	114	432	688.916	3	0	9	0	2	0	0	0	0	38.5	0	0	0	0	0	0	34.67	86	0	0	103

• CODE NUMBER DESCRIPTION & UNIT

CODE NO.	DESCRIPTION	UNIT	CODE NO.	DESCRIPTION	UNIT	CODE NO.	DESCRIPTION	UNIT	CODE NO.	DESCRIPTION	UNIT
1	CONCRETE FOR SIGN FOUNDATION	CY	9	REMOVE EXISTING GROUND MOUNTED SIGNS AND SUPPORTS	SF	17	OVERHEAD SIGN/LUMINAIRE "I" SUPPORT	LF	25	REMOVE EXISTING OVERHEAD SIGN STRUCTURE - BRIDGE MOUNTED	EA
2	SHEET ALUMINUM SIGNS	SF	10	REMOVE EXISTING CANTILEVER STRUCTURE AND SIGNS AND SUPPORTS	EA	18	GALVANIZED STEEL BEAMS (W6X16)	LF	26	REMOVE EXISTING BRIDGE MOUNTED SIGNS AND SUPPORTS	SF
3	EXTRUDED ALUMINUM SIGNS	SF	11	REMOVE EXISTING OVERHEAD SIGN STRUCTURE AND SIGNS AND SUPPORTS	EA	19	GALVANIZED STEEL BEAMS (W8X18)	LF	27	ADD STIFFENER ANGLE TO SIGNS	LF
4	SQUARE PERFORATED TUBULAR STEEL SIGN POST AND ANCHOR BASE	EA	12	BAND SIGN TO SIGN SUPPORT	EA	20	GALVANIZED STEEL BEAMS (W8X21)	LF	28	GALVANIZED STEEL BEAMS (W10x26)	LF
5	WOOD SIGN SUPPORTS 4 INCH X 6 INCH	LF	13	RELOCATE EXISTING GROUND MOUNTED SIGNS	SF	21	GALVANIZED STEEL BEAMS (W14X30)	LF	29	GALVANIZED STEEL BEAMS (W12x26)	LF
6	WOOD SIGN SUPPORTS 6 INCH X 6 INCH	LF	14	BREAKAWAY BASE SUPPORT SYSTEM FOR STEEL BEAMS	EA	22	GALVANIZED STEEL BEAMS (W18X35)	LF	30	GALVANIZED STEEL BEAMS (W6X15)	LF
7	WOOD SIGN SUPPORTS 6 INCH X 8 INCH	LF	15	GALVANIZED STEEL BEAMS (W6X9)	LF	23	GALVANIZED STEEL BEAMS (W18X40)	LF			
8	REMOVE SIGNS FROM EXISTING OVERHEAD STRUCTURE	SF	16	GALVANIZED STEEL BEAMS (W6X12)	LF	24	GALVANIZED STEEL BEAMS (W10X22)	LF			

WR&A
Whitman, Requardt and Associates, LLP
Engineers and Planners
801 S. Caroline Street
Baltimore, Maryland 21231
(410) 235-3450

Maryland Transportation Authority
Engineering Division

ADDENDUMS & REVISIONS

NO.	DESCRIPTION	BY	DATE
8	SHEET REVISED	NML	08/26/10

M:\3\50903\NorthernRegion\I95\sn1101_JFK.dgn OCTOBER 2009

UPGRADE AND REPLACE EXISTING SIGNING NORTHERN REGION
JOHN F. KENNEDY MEMORIAL HIGHWAY
THOMAS J. HATEM MEMORIAL BRIDGE

SIGNING QUANTITIES

DESIGNED BY J. MOCNY DRAWN BY J.CHENG CHECKED BY N. LEARY
CONST. REVIEW BY DATE OCTOBER 2009 SCALE N.T.S.

CONTRACT NO. MA-679-000-002
DRAWING NO. SN-11.01

DRILL HOLES
DRILL HOLES
DRILL HOLES

DRILL HOLES

DRILL HOLES

DRILL HOLES

SHEET NO.	SIGN NO.	REMARKS	CODE NUMBERS 1	2	3	4	5	6	7	8	9	10	11	12	13	14	15	16	17	18	19	20	21	22	23	24	25	26	27	28	29	30
SN-2.06	167	OH-1 (14'x15') & (12'x3') INSTALL ON EXISTING OVERHEAD STRUCTURE			246														105													
SN-2.06	170	GM-2 E5-1a(1) (6'x5'), OM-1(1) FY (18"x18") 1-W8x21 GALVANIZED STEEL BEAM	1.5	2.25	30									1		1						14										
SN-2.06	174	W4-1(R) BLK/FY (48"x48") SQUARE PERFORATED TUBULAR STEEL SIGN POST AND ANCHOR BASE		16		2																										
SN-2.06	175	W4-2R BLK/FY (48"x48") SQUARE PERFORATED TUBULAR STEEL SIGN POST AND ANCHOR BASE		16		2																										
SN-2.06		ITEM NOS. 8 & 9								293	98																					
SN-2.07	178	GM-147 (96"x16"), OM-3(1)R BLK/FY (24"x48") 2-4"x6"		18.67			30																									
SN-2.07	180	OM-3(1)L BLK/FY (24"x48") BAND SIGN TO BRIDGE PIER		8										1																		
SN-2.07	181	GM-149 (78"x16") SQUARE PERFORATED TUBULAR STEEL SIGN POST AND ANCHOR BASE		8.67		2																										
SN-2.07	183	OM-3(1)L BLK/FY (24"x48") BAND SIGN TO BRIDGE PIER		8										1																		
SN-2.07	185	GM-150 (78"x16") SQUARE PERFORATED TUBULAR STEEL SIGN POST AND ANCHOR BASE		8.67		2																										
SN-2.07	187	OM-3(1)L BLK/FY (24"x48") BAND SIGN TO BRIDGE PIER		8										1																		
SN-2.07	188	GM-148 (96"x16"), OM-3(1)R BLK/FY (24"x48") 2-4"x6"		18.67			30																									
SN-2.07	189	OM-3(1)L BLK/FY (24"x48") BAND SIGN TO BRIDGE PIER		8										1																		
SN-2.07	196	GM-3 (15'x10'), I-5 (24"x24"), M5-1(L) W/G (21"x15") 2-W8x18 GALVANIZED STEEL BEAMS	2.8	6.1875	150									2		2					38.5								20			
SN-2.07	197	M4-5 (24"x12"), M1-4 (24"x24"), M5-1(L) (21"x15"), R5-1a (36"x24") SQ. PERF. TUB. STL. SP & AB		14.1875		2																										
SN-2.07	198	M4-5 (24"x12"), M1-4 (24"x24"), M6-2(R) (21"x15"), R5-1a (36"x24") SQ. PERF. TUB. STL. SP & AB		14.1875		2																										
SN-2.07		ITEM NOS. 9 & 26									73.1875																	18.67				
SN-2.08	4	W13-2(1)MOD BLK/FY (48"x72") 2-4"x6"		24			38																									
SN-2.08	220	GM-5 E5-1(3) (5'x8') 1-W10x22 GALVANIZED STEEL BEAM	2.3		40											1										16.5						
SN-2.08	221	OM-1(1) FY (18"x18") SQUARE PERFORATED TUBULAR STEEL SIGN POST AND ANCHOR BASE		2.25		1																										
SN-2.08	223	R1-2 (48"x48"x48") SQUARE PERFORATED TUBULAR STEEL SIGN POST AND ANCHOR BASE		7		1																										
SN-2.08	224	C-3 (22'x10') INSTALL ON EXISTING SIGN STRUCTURE			220																											
SN-2.08		ITEM NOS. 8 & 9								220	70.375																					
SN-2.09	5	W13-2(1)MOD BLK/FY (48"x72") 2-4"x6"		24			38																									
SN-2.09	229	W9-2(1)L BLK/FY (48"x48") SQUARE PERFORATED TUBULAR STEEL SIGN POST AND ANCHOR BASE		16		2																										
SN-2.09	237	GM-7 E5-1(3) (5'x8') 1-W10x22 GALVANIZED STEEL BEAM	2.3		40											1										16						
SN-2.09	239	OM-1(1) FY (18"x18") SQUARE PERFORATED TUBULAR STEEL SIGN POST AND ANCHOR BASE		2.25		1																										
SN-2.09	240	C-4 (22'x10') INSTALL ON EXISTING CANTILEVER STRUCTURE			220																											
SN-2.09	247	M4-5 (24"x12"), M1-4 (24"x24"), M6-2(R) (21"x15") SQ. PERF. TUB. STL. SP & AB		8.1875		1																										
SN-2.09	248	M4-5 (24"x12"), M1-4 (24"x24"), M5-1(L) (21"x15") SQ. PERF. TUB. STL. SP & AB		8.1875		1																										
SN-2.09		ITEM NOS. 8 & 9								220	62.25																					
SN-2.11	253	GM-9 (15'x10')&(15'x1'),D4-2(2) (24"x24"),M6-3 W/G (21"x15"),I-5(24"x24"),M6-2(R) W/G (21"x15") 2-W14x30	5.8	12.375	165																		53.5						25.5			
SN-2.11	258	W4-1(R) BLK/FY (48"x48") SQUARE PERFORATED TUBULAR STEEL SIGN POST AND ANCHOR BASE		16		2																										
SN-2.11	259	R1-2 (60"x60"x60") SQUARE PERFORATED TUBULAR STEEL SIGN POST AND ANCHOR BASE		11		2																										
SN-2.11	262	OH-13 (14'x15') & (12'x3') INSTALL ON EXISTING OVERHEAD STRUCTURE			246														105													
SN-2.11	263	W13-2 BLK/FY (48"x60") 2-4"x6"		20			36																									
SN-2.11		ITEM NOS. 8 & 9								286	95.1875																					
SN-2.12	6	D4-2(2) (30"x30"), GM-4 (36"x36") SQUARE PERFORATED TUBULAR STEEL SIGN POST AND ANCHOR BASE		15.25		2																										
SN-2.12	7	I-5 (30"x30"), GM-6 (36"x36") SQUARE PERFORATED TUBULAR STEEL SIGN POST AND ANCHOR BASE		15.25		2																										
SN-2.12	268	M3-1(30"x15"),M1-1(36"x36"),R95-3(24"x24") SQUARE PERFORATED TUBULAR STEEL SIGN POST & ANCHOR BASE		16.125		2																										
SN-2.12	270	R2-1 (48"x60") 2-4"x6"		20			36																									
SN-2.12	271	R2-1 (48"x60") 2-4"x6"	8	20			36																									
SN-2.12	278	DMS*3, DMS-3a/b 2-1-3(1) (42"x24") INSTALL ON NEW OVERHEAD STRUCTURE	58.3	14										2																		
SN-2.12	279	GM-151 (66"x16") SQUARE PERFORATED TUBULAR STEEL SIGN POST AND ANCHOR BASE		7.33		2																										
SN-2.12	280	OM-3(1)L BLK/FY (24"x48") SQUARE PERFORATED TUBULAR STEEL SIGN POST AND ANCHOR BASE		8		1																										
SN-2.12	284	GM-153 R4-5(3) (48"x84") 1-6"x8"		28					21																							
SN-2.12	285	GM-154 R4-5(3) (48"x84") 1-6"x8"		28					21																							
SN-2.12	290	C-7a (12'x12') & (12'x3') INSTALL ON EXISTING CANTILEVER STRCUTURE			180																								36			
SN-2.12	292	GM-155 R4-5(4) (48"x96") 1-6"x8"		32					22																							
SN-2.12	293	GM-156 R4-5(4) (48"x96") 2-6"x6"		32				44																								
SN-2.12	294	R2-1 (48"x60") 2-4"x6"	8	20			36																									
SN-2.12	296	DMS*4, DMS-4a/b 2-1-3(1) (42"x24") INSTALL ON NEW OVERHEAD STRUCTURE	60.1	14										2																		
SUBTOTALS FOR SN-11.02			133.1	576.70	1537	32	280	44	64	1019	399	0	0	11	0	5	0	0	210	0	38.5	14	53.5	0	0	32.5	0	18.67	81.5	0	0	0
			8																													

• CODE NUMBER DESCRIPTION & UNIT

CODE NO.	DESCRIPTION	UNIT	CODE NO.	DESCRIPTION	UNIT	CODE NO.	DESCRIPTION	UNIT	CODE NO.	DESCRIPTION	UNIT
1	CONCRETE FOR SIGN FOUNDATION	CY	9	REMOVE EXISTING GROUND MOUNTED SIGNS AND SUPPORTS	SF	17	OVERHEAD SIGN/LUMINAIRE "I" SUPPORT	LF	25	REMOVE EXISTING OVERHEAD SIGN STRUCTURE - BRIDGE MOUNTED	EA
2	SHEET ALUMINUM SIGNS	SF	10	REMOVE EXISTING CANTILEVER STRUCTURE AND SIGNS AND SUPPORTS	EA	18	GALVANIZED STEEL BEAMS (W6X16)	LF	26	REMOVE EXISTING BRIDGE MOUNTED SIGNS AND SUPPORTS	SF
3	EXTRUDED ALUMINUM SIGNS	SF	11	REMOVE EXISTING OVERHEAD SIGN STRUCTURE AND SIGNS AND SUPPORTS	EA	19	GALVANIZED STEEL BEAMS (W8X18)	LF	27	ADD STIFFENER ANGLE TO SIGNS	LF
4	SQUARE PERFORATED TUBULAR STEEL SIGN POST AND ANCHOR BASE	EA	12	BAND SIGN TO SIGN SUPPORT	EA	20	GALVANIZED STEEL BEAMS (W8X21)	LF	28	GALVANIZED STEEL BEAMS (W10x26)	LF
5	WOOD SIGN SUPPORTS 4 INCH X 6 INCH	LF	13	RELOCATE EXISTING GROUND MOUNTED SIGNS	SF	21	GALVANIZED STEEL BEAMS (W14X30)	LF	29	GALVANIZED STEEL BEAMS (W12x26)	LF
6	WOOD SIGN SUPPORTS 6 INCH X 6 INCH	LF	14	BREAKAWAY BASE SUPPORT SYSTEM FOR STEEL BEAMS	EA	22	GALVANIZED STEEL BEAMS (W18X35)	LF	30	GALVANIZED STEEL BEAMS (W6X15)	LF
7	WOOD SIGN SUPPORTS 6 INCH X 8 INCH	LF	15	GALVANIZED STEEL BEAMS (W6X9)	LF	23	GALVANIZED STEEL BEAMS (W18X40)	LF			
8	REMOVE SIGNS FROM EXISTING OVERHEAD STRUCTURE	SF	16	GALVANIZED STEEL BEAMS (W6X12)	LF	24	GALVANIZED STEEL BEAMS (W10X22)	LF			

WR&A
Whitman, Requardt and Associates, LLP
Engineers and Planners
801 S. Caroline Street
Baltimore, Maryland 21231
(410) 235-3450

Maryland Transportation Authority
Engineering Division

ADDENDUMS & REVISIONS

NO.	DESCRIPTION	BY	DATE
8	SHEET REVISED	NML	08/26/10

M:\3150903\NorthernRegion\195\sn1102_JFK.dgn OCTOBER 2009

UPGRADE AND REPLACE EXISTING SIGNING NORTHERN REGION
JOHN F. KENNEDY MEMORIAL HIGHWAY
THOMAS J. HATEM MEMORIAL BRIDGE

SIGNING QUANTITIES

DESIGNED BY J. MOCNY DRAWN BY J.CHENG CHECKED BY N. LEARY
CONST. REVIEW BY DATE OCTOBER 2009 SCALE N.T.S.

CONTRACT NO. MA-679-000-002
DRAWING NO. SN-11.02
SHEET NO. 157 OF 169

DRILL HOLES

DRILL HOLES

DRILL HOLES

SHEET NO.	SIGN NO.	REMARKS	CODE NUMBERS 1	2	3	4	5	6	7	8	9	10	11	12	13	14	15	16	17	18	19	20	21	22	23	24	25	26	27	28	29	30
SN-2.12	299	C-6a (12'x12') & (12'x3') INSTALL ON EXISTING CANTILEVER STRCUTURE			180																								36			
SN-2.12	300	GM-152 (66"x16") SQUARE PERFORATED TUBULAR STEEL SIGN POST AND ANCHOR BASE		7.33		2																										
SN-2.12	301	OM-3(I)L BLK/FY (24"x48") SQUARE PERFORATED TUBULAR STEEL SIGN POST AND ANCHOR BASE		8		1																										
SN-2.12		ITEM NOS. 8, 9, 10 & 26								432	216.125	2																16				
SN-2.13		ITEM NO. 10										1																				
SN-2.14	339	M3-1 (30"x15"), MI-1 (36"x36"), R95-3 (24"x24") SQUARE PERFORATED TUBULAR STEEL SIGN POST & ANCHOR BASE		16.125		2																										
SN-2.14		ITEM NO. 9									15																					
SN-2.15	347	R2-1 (48"x60") 2-4"x6"		20			36																									
SN-2.15	348	R2-1 (48"x60") 2-4"x6"		20			36																									
SN-2.15	350	GM-157 R4-5(3) (48"x84") 1-6"x8"		28					21																							
SN-2.15	351	GM-158 R4-5(3) (48"x84") 1-6"x8"		28					21																							
SN-2.15	356	GM-11 (12'x7') INSTALL ON EXISTING GALVANIZED STEEL BEAMS	A		84																								2			
SN-2.15	368	DMS# 5, DMS-5a/b 2-1-3(I) (42"x24") INSTALL ON NEW OVERHEAD STRUCTURE	57.01	14										2																		
SN-2.15	369	OM-3(I)L BLK/FY (24"x48") SQUARE PERFORATED TUBULAR STEEL SIGN POST AND ANCHOR BASE		8		1																										
SN-2.15	370	GM-159(78"x16"),OM-3(I)R BLK/FY(24"x48") SQUARE PERFORATED TUBULAR STEEL SIGN POST & ANCHOR BASE		16.67		2																										
SN-2.15	1936	GM-253(78"x16"),OM-3(I)R BLK/FY(24"x48") SQUARE PERFORATED TUBULAR STEEL SIGN POST & ANCHOR BASE		16.67		2																										
SN-2.15		ITEM NOS. 9, 10 & 26									146	1																16				
SN-2.16	400	C-8 (12'x9') & (12'x3') INSTALL ON EXISTING CANTILEVER STRUCTURE			144														84													
SN-2.16	408	OM-3(L) BLK/FY (12"x36") SQUARE PERFORATED TUBULAR STEEL SIGN POST AND ANCHOR BASE		3		1																										
SN-2.16	410	GM-160(48"x36"),OM-3(R) BLK/FY(12"x36") SQUARE PERFORATED TUBULAR STEEL SIGN POST & ANCHOR BASE		15		2																										
SN-2.16	413	GM-162 R4-5(3) (48"x84") 1-6"x8"		28					21																							
SN-2.16	414	GM-163 R4-5(3) (48"x84") 2-6"x6"		28				42																								
SN-2.16	415	OM-3(L) BLK/FY (12"x36") SQUARE PERFORATED TUBULAR STEEL SIGN POST AND ANCHOR BASE		3		1																										
SN-2.16	417	GM-161(48"x36"),OM-3(R) BLK/FY(12"x36") SQUARE PERFORATED TUBULAR STEEL SIGN POST & ANCHOR BASE		15		2																										
SN-2.16	419	GM-13 (12'x7') 2-W6x16 GALVANIZED STEEL BEAMS	2.4		84											2				34												
SN-2.16		ITEM NOS. 8 & 9								216	168.333																					
SN-2.17	8	W13-2 BLK/FY (48"x60") 2-4"x6"		20			36																									
SN-2.17	427	C-9 (12'x9') & (12'x3') INSTALL ON EXISTING CANTILEVER STRUCTURE			144														84													
SN-2.17	428	OM-3(I)L BLK/FY (24"x48") SQUARE PERFORATED TUBULAR STEEL SIGN POST AND ANCHOR BASE		8		1																										
SN-2.17	429	GM-164 (66"x36"), OM-3(I)R BLK/FY (24"x48") 2-4"x6"		24.5			33																									
SN-2.17	434	GM-111 R4-5(6) (6'x6') 2-W6x9 GALVANIZED STEEL BEAMS	2.2		36												32.5															
SN-2.17	435	GM-110 R4-5(6) (6'x6') 1-W10x22 GALVANIZED STEEL BEAM	2.3		36											1										16						
SN-2.17	436	GM-166(48"x36"),OM-3(R) BLK/FY(12"x36") SQUARE PERFORATED TUBULAR STEEL SIGN POST & ANCHOR BASE		15		2																										
SN-2.17	437	OM-3(L) BLK/FY (12"x36") SQUARE PERFORATED TUBULAR STEEL SIGN POST AND ANCHOR BASE		3		1																										
SN-2.17	439	GM-167(48"x36"),OM-3(R) BLK/FY(12"x36") SQUARE PERFORATED TUBULAR STEEL SIGN POST & ANCHOR BASE	A	15		2																										
SN-2.17	441	DMS#6, DMS-6a/b 2-1-3(I) (42"x24") INSTALL ON NEW OVERHEAD STRUCTURE	55.49	14										2																		
SN-2.17	444	M3-3 (30"x15"), MI-1 (36"x36"), R95-3 (24"x24") SQUARE PERFORATED TUBULAR STEEL SIGN POST & ANCHOR BASE		16.125		2																										
SN-2.17	446	R2-1 (48"x60") 2-4"x6"		20			36																									
SN-2.17	447	R2-1 (48"x60") 2-4"x6"		20			36																									
SN-2.17	449	OM-3(I)L BLK/FY (24"x48") SQUARE PERFORATED TUBULAR STEEL SIGN POST AND ANCHOR BASE		8		1																										
SN-2.17	450	GM-165 (66"x36"), OM-3(I)R BLK/FY (24"x48") 2-4"x6"		24.5			33																									
SN-2.17	452	C-10 (14'x12') & (12'x3') INSTALL ON EXISTING CANTILEVER STRUCTURE			204														117													
SN-2.17	453	OM-1(I) FY (18"x18") SQUARE PERFORATED TUBULAR STEEL SIGN POST AND ANCHOR BASE		2.25		1																										
SN-2.17	455	GM-98 E5-1a(I) (6'x5') 1-W8x21 GALVANIZED STEEL BEAM	1.5		30											1						13.5										
SN-2.17	463	W4-1(R) BLK/FY (48"x48") SQUARE PERFORATED TUBULAR STEEL SIGN POST AND ANCHOR BASE		16		2																										
SN-2.17	464	R1-2 (60"x60"x60") SQUARE PERFORATED TUBULAR STEEL SIGN POST AND ANCHOR BASE		11		2																										
SN-2.17	469	OM-3(L) BLK/FY (12"x36") SQUARE PERFORATED TUBULAR STEEL SIGN POST AND ANCHOR BASE		3		1																										
SN-2.17		ITEM NOS. 8,9 & 10								447	274.708	1																				
SN-2.18	470	W13-2(I)MOD BLK/FY (48"x72") 2-4"x6"		24			38																									
SN-2.18	471	OM-1(I) FY (18"x18") SQUARE PERFORATED TUBULAR STEEL SIGN POST AND ANCHOR BASE		2.25		1																										
SN-2.18	473	GM-14 E5-1(3) (5'x8') 1-W8x21 GALVANIZED STEEL BEAM	1.5		40											1						16										
SUBTOTALS FOR SN-11.03			122.4	521.42	982	32	284	42	63	1095	820.166	5	0	4	0	5	32.5	0	285	34	0	29.5	0	0	0	16	0	32	38	0	0	0
			A																													

• CODE NUMBER DESCRIPTION & UNIT

CODE NO.	DESCRIPTION	UNIT	CODE NO.	DESCRIPTION	UNIT	CODE NO.	DESCRIPTION	UNIT	CODE NO.	DESCRIPTION	UNIT
1	CONCRETE FOR SIGN FOUNDATION	CY	9	REMOVE EXISTING GROUND MOUNTED SIGNS AND SUPPORTS	SF	17	OVERHEAD SIGN/LUMINAIRE "I" SUPPORT	LF	25	REMOVE EXISTING OVERHEAD SIGN STRUCTURE - BRIDGE MOUNTED	EA
2	SHEET ALUMINUM SIGNS	SF	10	REMOVE EXISTING CANTILEVER STRUCTURE AND SIGNS AND SUPPORTS	EA	18	GALVANIZED STEEL BEAMS (W6X16)	LF	26	REMOVE EXISTING BRIDGE MOUNTED SIGNS AND SUPPORTS	SF
3	EXTRUDED ALUMINUM SIGNS	SF	11	REMOVE EXISTING OVERHEAD SIGN STRUCTURE AND SIGNS AND SUPPORTS	EA	19	GALVANIZED STEEL BEAMS (W8X18)	LF	27	ADD STIFFENER ANGLE TO SIGNS	LF
4	SQUARE PERFORATED TUBULAR STEEL SIGN POST AND ANCHOR BASE	EA	12	BAND SIGN TO SIGN SUPPORT	EA	20	GALVANIZED STEEL BEAMS (W8X21)	LF	28	GALVANIZED STEEL BEAMS (W10x26)	LF
5	WOOD SIGN SUPPORTS 4 INCH X 6 INCH	LF	13	RELOCATE EXISTING GROUND MOUNTED SIGNS	SF	21	GALVANIZED STEEL BEAMS (W14X30)	LF	29	GALVANIZED STEEL BEAMS (W12x26)	LF
6	WOOD SIGN SUPPORTS 6 INCH X 6 INCH	LF	14	BREAKAWAY BASE SUPPORT SYSTEM FOR STEEL BEAMS	EA	22	GALVANIZED STEEL BEAMS (W18X35)	LF	30	GALVANIZED STEEL BEAMS (W6X15)	LF
7	WOOD SIGN SUPPORTS 6 INCH X 8 INCH	LF	15	GALVANIZED STEEL BEAMS (W6X9)	LF	23	GALVANIZED STEEL BEAMS (W18X40)	LF			
8	REMOVE SIGNS FROM EXISTING OVERHEAD STRUCTURE	SF	16	GALVANIZED STEEL BEAMS (W6X12)	LF	24	GALVANIZED STEEL BEAMS (W10X22)	LF			

WR&A
Whitman, Requardt and Associates, LLP
Engineers and Planners
801 S. Caroline Street
Baltimore, Maryland 21231
(410) 235-3450

Maryland Transportation Authority
Engineering Division

ADDENDUMS & REVISIONS

NO.	DESCRIPTION	BY	DATE
A	SHEET REVISED	NML	08/26/10

M:\3150903\NorthernRegion\195\sn1103_JFK.dgn OCTOBER 2009

UPGRADE AND REPLACE EXISTING SIGNING NORTHERN REGION
JOHN F. KENNEDY MEMORIAL HIGHWAY
THOMAS J. HATEM MEMORIAL BRIDGE

SIGNING QUANTITIES

DESIGNED BY J. MOCNY DRAWN BY J.CHENG CHECKED BY N. LEARY
CONST. REVIEW BY DATE OCTOBER 2009 SCALE N.T.S.

CONTRACT NO. MA-679-000-002
DRAWING NO. SN-11.03
SHEET NO. 158 OF 169

SHEET NO.	SIGN NO.	REMARKS	CODE NUMBERS 1	2	3	4	5	6	7	8	9	10	11	12	13	14	15	16	17	18	19	20	21	22	23	24	25	26	27	28	29	30
SN-2.18	485	R1-2 (48"x48"x48") SQUARE PERFORATED TUBULAR STEEL SIGN POST AND ANCHOR BASE		7		1																										
SN-2.18	489	M4-5(24"x12"),M1-4(24"x24"),M5-1(L)(21"x15"),R5-1a(36"x24") SQ. PERF. TUB. STL. SP & AB		14.1875		1																										
SN-2.18	490	M4-5(24"x12"),M1-4(24"x24"),M6-2(R)(21"x15"),R5-1a(36"x24") SQ. PERF. TUB. STL. SP & AB		14.1875		1																										
SN-2.18	491	R1-2 (48"x48"x48") SQUARE PERFORATED TUBULAR STEEL SIGN POST AND ANCHOR BASE		7		1																										
SN-2.18	494	GM-168 (84"x16") SQUARE PERFORATED TUBULAR STEEL SIGN POST AND ANCHOR BASE		9.33		2																										
SN-2.18	495	OM-3(1)L BLK/FY (24"x48") SQUARE PERFORATED TUBULAR STEEL SIGN POST AND ANCHOR BASE		8		1																										
SN-2.18	496	GM-169 (84"x16") SQUARE PERFORATED TUBULAR STEEL SIGN POST AND ANCHOR BASE		9.33		2																										
SN-2.18	497	OM-3(1)L BLK/FY (24"x48") SQUARE PERFORATED TUBULAR STEEL SIGN POST AND ANCHOR BASE		8		1																										
SN-2.18		ITEM NO.9									179.375																					
SN-2.19	480	R2-1 (36"x48") SQUARE PERFORATED TUBULAR STEEL SIGN POST AND ANCHOR BASE		12		2																										
SN-2.19	501	GM-16 (15'x7') 2-W6x16 GALVANIZED STEEL BEAMS	2.4		105											2				34									14			
SN-2.19	502	M4-5 (24"x12"), M1-4 (24"x24"), M5-1(L) (21"x15") SQ. PERF. TUB. STL. SP & AB		8.1875		1																										
SN-2.19	503	M4-5 (24"x12"), M1-4 (24"x24"), M6-2(R) (21"x15") SQ. PERF. TUB. STL. SP & AB		8.1875		1																										
SN-2.19	520	GM-17 E5-1(3) (5'x9') 1-W10x26 GALVANIZED STEEL BEAM	2.4		45											1														17		
SN-2.19	521	OM-1(1) FY (18"x18") SQUARE PERFORATED TUBULAR STEEL SIGN POST AND ANCHOR BASE		2.25		1																										
SN-2.19	523	W13-3 BLK/FY (36"x48") SQUARE PERFORATED TUBULAR STEEL SIGN POST AND ANCHOR BASE		12		2																										
SN-2.19		ITEM NO.9									169.375																					
SN-2.21	9	W13-2 BLK/FY (48"x60") 2-4"x6"		20			36																									
SN-2.21	530	GM-21 (15'x7') 2-W6x16 GALVANIZED STEEL BEAMS	2.4		105											2				33									14			
SN-2.21	535	W4-1(R) BLK/FY (48"x48") SQUARE PERFORATED TUBULAR STEEL SIGN POST AND ANCHOR BASE		16		2																										
SN-2.21	537	OM-1(1) FY (18"x18") SQUARE PERFORATED TUBULAR STEEL SIGN POST AND ANCHOR BASE		2.25		1																										
SN-2.21	542	R1-2 (60"x60"x60") SQUARE PERFORATED TUBULAR STEEL SIGN POST AND ANCHOR BASE		11		2																										
SN-2.21	543	C-11 (14'x12') & (12'x3') INSTALL ON EXISTING CANTILEVER STRUCTURE			204														117													
SN-2.21	560	M3-1 (30"x15"), M1-1 (36"x36"), R95-3 (24"x24") SQUARE PERFORATED TUBULAR STEEL SIGN POST & ANCHOR BASE		16.125		2																										
SN-2.21	563	GM-171 R4-5(3) (48"x84") 2-6"x6"		28				42																								
SN-2.21	564	GM-170 R4-5(3) (48"x84") 1-6"x8"		28					21																							
SN-2.21	565	R2-1 (48"x60") 2-4"x6"		20			36																									
SN-2.21	566	R2-1 (48"x60") 2-4"x6"		20			36																									
SN-2.21	573	C-12 (12'x9') & (12'x3') INSTALL ON EXISTING CANTILEVER STRUCTURE			144														84													
SN-2.21		ITEM NOS. 8 & 9								531	124.125																					
SN-2.22	574	W13-2 BLK/FY (48"x60") 2-4"x6"		20			36																									
SN-2.22	579	R1-2 (60"x60"x60") SQUARE PERFORATED TUBULAR STEEL SIGN POST AND ANCHOR BASE		11		2																										
SN-2.22	580	OM-1(1) FY (18"x18") SQUARE PERFORATED TUBULAR STEEL SIGN POST AND ANCHOR BASE		2.25		1																										
SN-2.22	582	W4-1(L) BLK/FY (48"x48") SQUARE PERFORATED TUBULAR STEEL SIGN POST AND ANCHOR BASE		16		2																										
SN-2.22	584	GM-172 R4-5(3) (48"x84") 2-6"x6"		28				42																								
SN-2.22	585	GM-173 R4-5(3) (48"x84") 2-6"x6"		28				42																								
SN-2.22		ITEM NO. 9									23																					
SN-2.23	595	GM-24 RELOCATED SIGN (13'x15') 2-W12x26 GALVANIZED STEEL BEAMS	5.4												195																51	
SN-2.23	603	OM-1(1) FY (18"x18") SQUARE PERFORATED TUBULAR STEEL SIGN POST AND ANCHOR BASE		2.25		1																										
SN-2.24	610	OH-18 (12'x9') & (12'x3') INSTALL ON EXISTING OVERHEAD STRUCTURE			144																											
SN-2.24	620	M3-1 (30"x15"), M1-1 (36"x36"), R95-3 (24"x24") SQUARE PERFORATED TUBULAR STEEL SIGN POST & ANCHOR BASE		16.125		2																										
SN-2.24	626	GM-250 R4-5(3) (48"x84") 1-6"x8"		28					21																							
SN-2.24	627	GM-251 R4-5(3) (48"x84") 1-6"x8"		28					21																							
SN-2.24	1910	R2-1 (48"x60") 2-4"x6"		20			36																									
SN-2.24	1911	R2-1 (48"x60") 2-4"x6"		20			36																									
SN-2.24	1937	GM-12 (16'x7') 2-W8x18 GALVANIZED STEEL BEAMS	2.8		112																36.5								14			
SN-2.24		ITEM NOS. 8 & 9								204	180																					
			3																													
SN-2.25	644	DMS #7, DMS-7a/b 2-1-3(1) (42"x24") INSTALL ON NEW OVERHEAD STRUCTURE	57.19	14										2																		
SN-2.25	649	GM-26 (11'x7') 2-W6x12 GALVANIZED STEEL BEAMS	2.2		77											2		33														
SN-2.25	652	GM-174(72"x16"),OM-3(1)R BLK/FY(24"x48") SQUARE PERFORATED TUBULAR STEEL SIGN POST & ANCHOR BASE		16		2																										
SN-2.25	653	OM-3(1)L BLK/FY (24"x48") SQUARE PERFORATED TUBULAR STEEL SIGN POST AND ANCHOR BASE		8		1																										
SUBTOTALS FOR SN-11.04			74.79	538.66	936	35	216	126	63	735	675.875	0	0	2	195	7	0	33	201	67	36.5	0	0	0	0	0	0	0	42	17	51	0
			3																													

• CODE NUMBER DESCRIPTION & UNIT

CODE NO.	DESCRIPTION	UNIT	CODE NO.	DESCRIPTION	UNIT	CODE NO.	DESCRIPTION	UNIT	CODE NO.	DESCRIPTION	UNIT
1	CONCRETE FOR SIGN FOUNDATION	CY	9	REMOVE EXISTING GROUND MOUNTED SIGNS AND SUPPORTS	SF	17	OVERHEAD SIGN/LUMINAIRE "I" SUPPORT	LF	25	REMOVE EXISTING OVERHEAD SIGN STRUCTURE - BRIDGE MOUNTED	EA
2	SHEET ALUMINUM SIGNS	SF	10	REMOVE EXISTING CANTILEVER STRUCTURE AND SIGNS AND SUPPORTS	EA	18	GALVANIZED STEEL BEAMS (W6X16)	LF	26	REMOVE EXISTING BRIDGE MOUNTED SIGNS AND SUPPORTS	SF
3	EXTRUDED ALUMINUM SIGNS	SF	11	REMOVE EXISTING OVERHEAD SIGN STRUCTURE AND SIGNS AND SUPPORTS	EA	19	GALVANIZED STEEL BEAMS (W8X18)	LF	27	ADD STIFFENER ANGLE TO SIGNS	LF
4	SQUARE PERFORATED TUBULAR STEEL SIGN POST AND ANCHOR BASE	EA	12	BAND SIGN TO SIGN SUPPORT	EA	20	GALVANIZED STEEL BEAMS (W8X21)	LF	28	GALVANIZED STEEL BEAMS (W10x26)	LF
5	WOOD SIGN SUPPORTS 4 INCH X 6 INCH	LF	13	RELOCATE EXISTING GROUND MOUNTED SIGNS	SF	21	GALVANIZED STEEL BEAMS (W14X30)	LF	29	GALVANIZED STEEL BEAMS (W12x26)	LF
6	WOOD SIGN SUPPORTS 6 INCH X 6 INCH	LF	14	BREAKAWAY BASE SUPPORT SYSTEM FOR STEEL BEAMS	EA	22	GALVANIZED STEEL BEAMS (W18X35)	LF	30	GALVANIZED STEEL BEAMS (W6X15)	LF
7	WOOD SIGN SUPPORTS 6 INCH X 8 INCH	LF	15	GALVANIZED STEEL BEAMS (W6X9)	LF	23	GALVANIZED STEEL BEAMS (W18X40)	LF			
8	REMOVE SIGNS FROM EXISTING OVERHEAD STRUCTURE	SF	16	GALVANIZED STEEL BEAMS (W6X12)	LF	24	GALVANIZED STEEL BEAMS (W10X22)	LF			

WR&A
Whitman, Requardt and Associates, LLP
Engineers and Planners
801 S. Caroline Street
Baltimore, Maryland 21231
(410) 235-3450

Maryland Transportation Authority
Engineering Division

ADDENDUMS & REVISIONS

NO.	DESCRIPTION	BY	DATE
3	SHEET REVISED	NML	08/26/10

M:\3150903\NorthernRegion\195\sn1104_JFK.dgn OCTOBER 2009

UPGRADE AND REPLACE EXISTING SIGNING NORTHERN REGION
JOHN F. KENNEDY MEMORIAL HIGHWAY
THOMAS J. HATEM MEMORIAL BRIDGE
SIGNING QUANTITIES

DESIGNED BY J. MOCNY DRAWN BY J.CHENG CHECKED BY N. LEARY
CONST. REVIEW BY DATE OCTOBER 2009 SCALE N.T.S.

CONTRACT NO. MA-679-000-002
DRAWING NO. SN-11.04
SHEET NO. 159 OF 169

DRILL HOLES
DRILL HOLES
DRILL HOLES

DRILL HOLES

DRILL HOLES

DRILL HOLES

SHEET NO.	SIGN NO.	REMARKS	CODE NUMBERS 1	2	3	4	5	6	7	8	9	10	11	12	13	14	15	16	17	18	19	20	21	22	23	24	25	26	27	28	29	30
SN-2.25	654	OM-3(11)L BLK/FY (24"x48") SQUARE PERFORATED TUBULAR STEEL SIGN POST AND ANCHOR BASE		8		1																										
SN-2.25	655	GM-175(72"x16"),OM-3(11)R BLK/FY(24"x48") SQUARE PERFORATED TUBULAR STEEL SIGN POST & ANCHOR BASE	4	16		2																										
2 SN-2.25	658	DMS #8, DMS-8a/b 2-1-3(1) (42"x24") INSTALL ON NEW OVERHEAD STRUCTURE	60.22	14										2	66																	
SN-2.25	663	GM-112 R4-5(6) (6'x6') 1-W8x21 GALVANIZED STEEL BEAM	1.5		36											1						14.5										
SN-2.25	664	GM-113 R4-5(6) (6'x6') 1-W8x21 GALVANIZED STEEL BEAM	1.5		36											1						15										
SN-2.25	667	R2-1 (48"x60") 2-4"x6"		20			36																									
SN-2.25	668	R2-1 (48"x60") 2-4"x6"		20			36																									
SN-2.25	671	M3-3 (30"x15"), M1-1 (36"x36"), R95-3 (24"x24") SQUARE PERFORATED TUBULAR STEEL SIGN POST & ANCHOR BASE		16.125		2																										
2 SN-2.25		ITEM NOS. 8,9,10 & 26								84	205.125	2																8				
SN-2.26	692	OM-3(2) BLK/FY (24"x30") BAND SIGN TO BRIDGE PIER		5										1																		
SN-2.26	693	OM-3(R) BLK/FY (12"x36") SQUARE PERFORATED TUBULAR STEEL SIGN POST AND ANCHOR BASE		3		1																										
SN-2.26	694	OM-3(R) BLK/FY (12"x36") SQUARE PERFORATED TUBULAR STEEL SIGN POST AND ANCHOR BASE		3		1																										
SN-2.26	695	OM-3(2) BLK/FY (24"x30") BAND SIGN TO BRIDGE PIER		5										1																		
SN-2.26	1939	GM-254 (72"x27") INSTALL OVERLAY ON EXISTING SIGN		13.5																												
SN-2.26	1940	GM-255 (72"x27") INSTALL OVERLAY ON EXISTING SIGN		13.5																												
SN-2.26		ITEM NO. 9									16																					
SN-2.28	1941	GM-256 (15'x10') 2-W8x18 GALVANIZED STEEL BEAMS	2.8		150											2					38								20			
SN-2.28		ITEM NO. 9									156																					
SN-2.30	1949	C-53 (24'x10') INSTALL ON EXISTING CANTILEVER STRUCTURE			240																											
SN-2.30		ITEM NO. 8								288																						
SN-2.32	716	M3-1 (30"x15"), M1-1 (36"x36"), R95-3 (24"x24") SQUARE PERFORATED TUBULAR STEEL SIGN POST & ANCHOR BASE		16.125		2																										
SN-2.32	721	R2-1 (48"x60") 2-4"x6"		20			36																									
SN-2.32	722	R2-1 (48"x60") 2-4"x6"		20			36																									
SN-2.32	723	GM-176(54"x16"),OM-3(11)R BLK/FY(24"x48") SQUARE PERFORATED TUBULAR STEEL SIGN POST & ANCHOR BASE		14		2																										
SN-2.32	724	OM-3(11)L BLK/FY (24"x48") SQUARE PERFORATED TUBULAR STEEL SIGN POST AND ANCHOR BASE		8		1																										
SN-2.32	726	OM-3(11)L BLK/FY (24"x48") SQUARE PERFORATED TUBULAR STEEL SIGN POST AND ANCHOR BASE		8		1																										
SN-2.32	728	GM-177(54"x16"),OM-3(11)R BLK/FY(24"x48") SQUARE PERFORATED TUBULAR STEEL SIGN POST & ANCHOR BASE		14		2																										
SN-2.32	731	GM-178 R4-5(3) (48"x84") 1-6"x8"		28					21																							
SN-2.32	732	GM-179 R4-5(3) (48"x84") 1-6"x8"		28					21																							
SN-2.32	735	GM-27 (13'x7') 2-W6x12 GALVANIZED STEEL BEAMS	2.2		91													31														
SN-2.32		ITEM NOS. 8,9 & 26								84	131.125																	13.33				
SN-2.33	744	C-50 (24'x9') INSTALL ON NEW CANTILEVER STRUCTURE	16.8 4		216																											
SN-2.33	754	GM-180 (72"x36"), OM-3(R) BLK/FY (12"x36") 2-4"x6"		21			32																									
SN-2.33	755	OM-3(L) BLK/FY (12"x36") SQUARE PERFORATED TUBULAR STEEL SIGN POST AND ANCHOR BASE		3		1																										
SN-2.33	756	OM-3(L) BLK/FY (12"x36") SQUARE PERFORATED TUBULAR STEEL SIGN POST AND ANCHOR BASE		3		1																										
SN-2.33	759	GM-181 (72"x36"), OM-3(R) BLK/FY (12"x36") 2-4"x6"	4	21			32																									
SN-2.33	760	DMS#9, DMS-9a/b 2-1-3(1) (42"x24") INSTALL ON NEW OVERHEAD STRUCTURE	57.95	14										2																		
SN-2.33	761	DMS#10, DMS-10a/b 2-1-3(1) (42"x24") INSTALL ON NEW OVERHEAD STRUCTURE	57.2	14										2																		
SN-2.33		ITEM NO. 10	4									2																				
SN-2.34	786	GM-114 (13'x10') 2-W8x18 GALVANIZED STEEL BEAMS	2.8												130	2					38.5											
SN-2.34	791	C-14 (20'x12') & (12'x3') INSTALL ON EXISTING CANTILEVER STRUCTURE			276																											
SN-2.34	796	OM-3(11)L BLK/FY (24"x48") SQUARE PERFORATED TUBULAR STEEL SIGN POST AND ANCHOR BASE		8		1																										
SN-2.34	797	GM-182(60"x16"),OM-3(11)R BLK/FY(24"x48") SQUARE PERFORATED TUBULAR STEEL SIGN POST & ANCHOR BASE		14.67		2																										
SN-2.34	798	GM-183(60"x16"),OM-3(11)R BLK/FY(24"x48") SQUARE PERFORATED TUBULAR STEEL SIGN POST & ANCHOR BASE		14.67		2																										
SN-2.34	799	OM-3(11)L BLK/FY (24"x48") SQUARE PERFORATED TUBULAR STEEL SIGN POST AND ANCHOR BASE		8		1																										
SN-2.34		ITEM NOS. 8 & 26								335																		16				
SN-2.35	10	W13-2 BLK/FY (48"x60") 2-4"x6"		20			36																									
SN-2.35	807	GM-30 (11'x7') 2-W6x16 GALVANIZED STEEL BEAMS	2.4		77											2				34												
SN-2.35	810	C-15 (20'x12') & (12'x3') INSTALL ON EXISTING CANTILEVER STRUCTURE			276																								12			
SN-2.35	811	GM-185 R4-5(3) (48"x84") 2-6"x6"		28				42																								
SUBTOTALS FOR SN-11.05			205.37 4	462.59	1398	23	244	42	42	791	508.25 4	4	0	8	4 196	8	0	31	0	34	76.5	29.5	0	0	0	0	0	37.33	32	0	0	0

• CODE NUMBER DESCRIPTION & UNIT

CODE NO.	DESCRIPTION	UNIT	CODE NO.	DESCRIPTION	UNIT	CODE NO.	DESCRIPTION	UNIT	CODE NO.	DESCRIPTION	UNIT
1	CONCRETE FOR SIGN FOUNDATION	CY	9	REMOVE EXISTING GROUND MOUNTED SIGNS AND SUPPORTS	SF	17	OVERHEAD SIGN/LUMINAIRE "I" SUPPORT	LF	25	REMOVE EXISTING OVERHEAD SIGN STRUCTURE - BRIDGE MOUNTED	EA
2	SHEET ALUMINUM SIGNS	SF	10	REMOVE EXISTING CANTILEVER STRUCTURE AND SIGNS AND SUPPORTS	EA	18	GALVANIZED STEEL BEAMS (W6X16)	LF	26	REMOVE EXISTING BRIDGE MOUNTED SIGNS AND SUPPORTS	SF
3	EXTRUDED ALUMINUM SIGNS	SF	11	REMOVE EXISTING OVERHEAD SIGN STRUCTURE AND SIGNS AND SUPPORTS	EA	19	GALVANIZED STEEL BEAMS (W8X18)	LF	27	ADD STIFFENER ANGLE TO SIGNS	LF
4	SQUARE PERFORATED TUBULAR STEEL SIGN POST AND ANCHOR BASE	EA	12	BAND SIGN TO SIGN SUPPORT	EA	20	GALVANIZED STEEL BEAMS (W8X21)	LF	28	GALVANIZED STEEL BEAMS (W10x26)	LF
5	WOOD SIGN SUPPORTS 4 INCH X 6 INCH	LF	13	RELOCATE EXISTING GROUND MOUNTED SIGNS	SF	21	GALVANIZED STEEL BEAMS (W14X30)	LF	29	GALVANIZED STEEL BEAMS (W12x26)	LF
6	WOOD SIGN SUPPORTS 6 INCH X 6 INCH	LF	14	BREAKAWAY BASE SUPPORT SYSTEM FOR STEEL BEAMS	EA	22	GALVANIZED STEEL BEAMS (W18X35)	LF	30	GALVANIZED STEEL BEAMS (W6x15)	LF
7	WOOD SIGN SUPPORTS 6 INCH X 8 INCH	LF	15	GALVANIZED STEEL BEAMS (W6X9)	LF	23	GALVANIZED STEEL BEAMS (W18X40)	LF			
8	REMOVE SIGNS FROM EXISTING OVERHEAD STRUCTURE	SF	16	GALVANIZED STEEL BEAMS (W6X12)	LF	24	GALVANIZED STEEL BEAMS (W10X22)	LF			

WR&A
Whitman, Requardt and Associates, LLP
Engineers and Planners
801 S. Caroline Street
Baltimore, Maryland 21231
(410) 235-3450

Maryland Transportation Authority
Engineering Division

ADDENDUMS & REVISIONS

NO.	DESCRIPTION	BY	DATE
2	SHEET REVISED	NML	04/30/10
4	SHEET REVISED	NML	08/26/10

M:\3150903\NorthernRegion\195\sn1105_JFK.dgn OCTOBER 2009

UPGRADE AND REPLACE EXISTING SIGNING NORTHERN REGION
JOHN F. KENNEDY MEMORIAL HIGHWAY
THOMAS J. HATEM MEMORIAL BRIDGE

SIGNING QUANTITIES

DESIGNED BY J. MOCNY DRAWN BY J.CHENG CHECKED BY N. LEARY
CONST. REVIEW BY DATE OCTOBER 2009 SCALE N.T.S.

CONTRACT NO. MA-679-000-002
DRAWING NO. SN-11.05
SHEET NO. 160 OF 169

SHEET NO.	SIGN NO.	REMARKS	CODE NUMBERS 1	2	3	4	5	6	7	8	9	10	11	12	13	14	15	16	17	18	19	20	21	22	23	24	25	26	27	28	29	30
SN-2.35	812	GM-184 R4-5(3) (48"x84") 1-6"x8"		28					21																							
SN-2.35	817	GM-186(60"x16"),OM-3(1)R BLK/FY(24"x48") SQUARE PERFORATED TUBULAR STEEL SIGN POST & ANCHOR BASE		14.67		2																										
SN-2.35	818	OM-3(1)L BLK/FY (24"x48") SQUARE PERFORATED TUBULAR STEEL SIGN POST AND ANCHOR BASE		8		1																										
SN-2.35	820	OM-3(1)L BLK/FY (24"x48") SQUARE PERFORATED TUBULAR STEEL SIGN POST AND ANCHOR BASE		8		1																										
SN-2.35	822	GM-187(60"x16"),OM-3(1)R BLK/FY(24"x48") SQUARE PERFORATED TUBULAR STEEL SIGN POST & ANCHOR BASE		14.67		2																										
SN-2.35	823	R2-1 (48"x60") 2-4"x6"		20			36																									
SN-2.35	824	R2-1 (48"x60") 2-4"x6"		20			36																									
SN-2.35	827	M3-3 (30"x15"), M1-1 (36"x36"), R95-3 (24"x24") SQUARE PERFORATED TUBULAR STEEL SIGN POST & ANCHOR BASE		16.125		2																										
SN-2.35	832	OH-19 (24'x14') & (12'x3') INSTALL ON EXISTING OVERHEAD STRUCTURE			372																											
SN-2.35	839	R1-2 (60"x60"x60") SQUARE PERFORATED TUBULAR STEEL SIGN POST AND ANCHOR BASE		11		2																										
SN-2.35	840	OM-1(1) FY (18"x18") SQUARE PERFORATED TUBULAR STEEL SIGN POST AND ANCHOR BASE		2.25		1																										
SN-2.35	842	W4-1(R) BLK/FY (48"x48") SQUARE PERFORATED TUBULAR STEEL SIGN POST AND ANCHOR BASE		16		2																										
SN-2.35		ITEM NOS. 8, 9, & 26								865	235.375																	16				
SN-2.36	850	GM-32 (15'x11')&(15'x1'), I-5 (24"x24"), M6-1(L) W/G (21"x15"), 2-W10x22 GALVANIZED STEEL BEAMS	4.6	18.5625	180											2										47			30.25			
SN-2.36	850	D4-2(2) (24"x24"), M6-3 W/G (21"x15"), D9-2 (24"x24"), M6-2(R) W/G (21"x15")																														
SN-2.36		ITEM NO. 9									508																					
SN-2.37	854	GM-189(54"x16"),OM-3(1)R BLK/FY(24"x48") SQUARE PERFORATED TUBULAR STEEL SIGN POST & ANCHOR BASE		14		2																										
SN-2.37	856	OM-3(1)L BLK/FY (24"x48") SQUARE PERFORATED TUBULAR STEEL SIGN POST AND ANCHOR BASE		8		1																										
SN-2.37	857	OM-3(1)L BLK/FY (24"x48") SQUARE PERFORATED TUBULAR STEEL SIGN POST AND ANCHOR BASE		8		1																										
SN-2.37	858	GM-188(54"x16"),OM-3(1)R BLK/FY(24"x48") SQUARE PERFORATED TUBULAR STEEL SIGN POST & ANCHOR BASE		14		2																										
SN-2.37	868	MdTA-02.01 (48"x48") SQUARE PERFORATED TUBULAR STEEL SIGN POST AND ANCHOR BASE		16		2																										
SN-2.37	869	W4-1(R) BLK/FY (48"x48") SQUARE PERFORATED TUBULAR STEEL SIGN POST AND ANCHOR BASE		16		2																										
SN-2.37		ITEM NOS. 9 & 26									108																	16				
SN-2.38	879	R5-1a (36"x24") SQUARE PERFORATED TUBULAR STEEL SIGN POST AND ANCHOR BASE		6		1																										
SN-2.38	880	R5-1a (36"x24") SQUARE PERFORATED TUBULAR STEEL SIGN POST AND ANCHOR BASE		6		1																										
SN-2.38	881	OM-1(1) FY (18"x18") SQUARE PERFORATED TUBULAR STEEL SIGN POST AND ANCHOR BASE		2.25		1																										
SN-2.38	882	M4-5 (24"x12"), M1-4 (24"x24"), M6-2(R) (21"x15") SQ. PERF. TUB. STL. SP & AB		8.1875		1																										
SN-2.38	884	R5-1a (36"x24") SQUARE PERFORATED TUBULAR STEEL SIGN POST AND ANCHOR BASE		6		1																										
SN-2.38	885	R5-1a (36"x24") SQUARE PERFORATED TUBULAR STEEL SIGN POST AND ANCHOR BASE		6		1																										
SN-2.38	888	R1-2 (48"x48"x48") SQUARE PERFORATED TUBULAR STEEL SIGN POST AND ANCHOR BASE		7		1																										
SN-2.38	889	R1-2 (48"x48"x48") SQUARE PERFORATED TUBULAR STEEL SIGN POST AND ANCHOR BASE		7		1																										
SN-2.38		ITEM NO. 9									126.375																					
SN-2.39	895	C-17 (29'x13') INSTALL ON NEW CANTILEVER STRUCTURE	16.34		377																											
SN-2.39		ITEM NO. 9									168																					
SN-2.40	898	R5-1a (36"x24") SQUARE PERFORATED TUBULAR STEEL SIGN POST AND ANCHOR BASE		6		1																										
SN-2.40	899	R5-1a (36"x24") SQUARE PERFORATED TUBULAR STEEL SIGN POST AND ANCHOR BASE		6		1																										
SN-2.40	906	R5-1a (36"x24") SQUARE PERFORATED TUBULAR STEEL SIGN POST AND ANCHOR BASE		6		1																										
SN-2.40	907	R5-1a (36"x24") SQUARE PERFORATED TUBULAR STEEL SIGN POST AND ANCHOR BASE		6		1																										
SN-2.40	914	R1-2 (48"x48"x48") SQUARE PERFORATED TUBULAR STEEL SIGN POST AND ANCHOR BASE		7		1																										
SN-2.40		ITEM NO. 9									104.25																					
SN-2.41	11	W13-3 BLK/FY (36"x48") SQUARE PERFORATED TUBULAR STEEL SIGN POST AND ANCHOR BASE		12		2																										
SN-2.41	918	C-18 (29'x12') INSTALL ON EXISTING CANTILEVER STRUCTURE			348														66													
SN-2.41	919	R1-2 (48"x48"x48") SQUARE PERFORATED TUBULAR STEEL SIGN POST AND ANCHOR BASE		7		1																										
SN-2.41		ITEM NOS. 8 & 9								312	27																					
SN-2.42	921	M4-5 (24"x12"), M1-4 (24"x24"), M6-1(L) (21"x15") SQ. PERF. TUB. STL. SP & AB		8.1875		1																										
SN-2.42	923	GM-39 (15'x11')&(15'x1'), D4-2(2)(24"x24"), M6-1(L) W/G (21"x15"), 2-W10x22 GALVANIZED STEEL BEAMS	4.6	18.5625	180											2										43.5			30.25			
SN-2.42	923	D9-2 (24"x24"), M6-1(L) (21"x15"), I-5 (24"x24"), M6-2(R) W/G (21"x15")																														
SN-2.42		ITEM NO. 9									307																					
SUBTOTALS FOR SN-11.06			25.54	378.465	1457	40	72	0	21	1177	1584	0	0	0	0	4	0	0	66	0	0	0	0	0	0	90.5	0	32	60.5	0	0	0

• CODE NUMBER DESCRIPTION & UNIT

CODE NO.	DESCRIPTION	UNIT	CODE NO.	DESCRIPTION	UNIT	CODE NO.	DESCRIPTION	UNIT	CODE NO.	DESCRIPTION	UNIT
1	CONCRETE FOR SIGN FOUNDATION	CY	9	REMOVE EXISTING GROUND MOUNTED SIGNS AND SUPPORTS	SF	17	OVERHEAD SIGN/LUMINAIRE "I" SUPPORT	LF	25	REMOVE EXISTING OVERHEAD SIGN STRUCTURE - BRIDGE MOUNTED	EA
2	SHEET ALUMINUM SIGNS	SF	10	REMOVE EXISTING CANTILEVER STRUCTURE AND SIGNS AND SUPPORTS	EA	18	GALVANIZED STEEL BEAMS (W6X16)	LF	26	REMOVE EXISTING BRIDGE MOUNTED SIGNS AND SUPPORTS	SF
3	EXTRUDED ALUMINUM SIGNS	SF	11	REMOVE EXISTING OVERHEAD SIGN STRUCTURE AND SIGNS AND SUPPORTS	EA	19	GALVANIZED STEEL BEAMS (W8X18)	LF	27	ADD STIFFENER ANGLE TO SIGNS	LF
4	SQUARE PERFORATED TUBULAR STEEL SIGN POST AND ANCHOR BASE	EA	12	BAND SIGN TO SIGN SUPPORT	EA	20	GALVANIZED STEEL BEAMS (W8X21)	LF	28	GALVANIZED STEEL BEAMS (W10x26)	LF
5	WOOD SIGN SUPPORTS 4 INCH X 6 INCH	LF	13	RELOCATE EXISTING GROUND MOUNTED SIGNS	SF	21	GALVANIZED STEEL BEAMS (W14X30)	LF	29	GALVANIZED STEEL BEAMS (W12x26)	LF
6	WOOD SIGN SUPPORTS 6 INCH X 6 INCH	LF	14	BREAKAWAY BASE SUPPORT SYSTEM FOR STEEL BEAMS	EA	22	GALVANIZED STEEL BEAMS (W18X35)	LF	30	GALVANIZED STEEL BEAMS (W6X15)	LF
7	WOOD SIGN SUPPORTS 6 INCH X 8 INCH	LF	15	GALVANIZED STEEL BEAMS (W6X9)	LF	23	GALVANIZED STEEL BEAMS (W18X40)	LF			
8	REMOVE SIGNS FROM EXISTING OVERHEAD STRUCTURE	SF	16	GALVANIZED STEEL BEAMS (W6X12)	LF	24	GALVANIZED STEEL BEAMS (W10X22)	LF			

WR&A
Whitman, Requardt and Associates, LLP
Engineers and Planners
801 S. Caroline Street
Baltimore, Maryland 21231
(410) 235-3450

Maryland Transportation Authority
Engineering Division

ADDENDUMS & REVISIONS

NO.	DESCRIPTION	BY	DATE
1	SHEET REVISED	NML	8/26/10

M:\3150903\NorthernRegion\195\sn1106_JFK.dgn OCTOBER 2009

UPGRADE AND REPLACE EXISTING SIGNING NORTHERN REGION
JOHN F. KENNEDY MEMORIAL HIGHWAY
THOMAS J. HATEM MEMORIAL BRIDGE

SIGNING QUANTITIES

DESIGNED BY J. MOCNY DRAWN BY J.CHENG CHECKED BY N. LEARY
CONST. REVIEW BY DATE OCTOBER 2009 SCALE N.T.S.

CONTRACT NO. MA-679-000-002
DRAWING NO. SN-11.06
SHEET NO. 161 OF 169

SHEET NO.	SIGN NO.	REMARKS	CODE NUMBERS 1	2	3	4	5	6	7	8	9	10	11	12	13	14	15	16	17	18	19	20	21	22	23	24	25	26	27	28	29	30
SN-2.43	12	WI3-2 BLK/FY (48"x60") 2-4"x6"		20			36																									
SN-2.43	924	RI-2 (60"x60"x60") SQUARE PERFORATED TUBULAR STEEL SIGN POST AND ANCHOR BASE		11		2																										
SN-2.43	928	OM-1(L) FY (18"x18") SQUARE PERFORATED TUBULAR STEEL SIGN POST AND ANCHOR BASE		2.25		1																										
SN-2.43	931	M3-1 (30"x15"), M1-1 (36"x36"), R95-3 (24"x24") SQUARE PERFORATED TUBULAR STEEL SIGN POST & ANCHOR BASE		16.125		2																										
SN-2.43	932	OM-3(1)L BLK/FY (24"x48") SQUARE PERFORATED TUBULAR STEEL SIGN POST AND ANCHOR BASE		8		1																										
SN-2.43	933	GM-190(72"x16"),OM-3(1)R BLK/FY(24"x48") SQUARE PERFORATED TUBULAR STEEL SIGN POST & ANCHOR BASE		16		2																										
SN-2.43	934	GM-191(72"x16"),OM-3(1)R BLK/FY(24"x48") SQUARE PERFORATED TUBULAR STEEL SIGN POST & ANCHOR BASE		16		2																										
SN-2.43	935	OM-3(1)L BLK/FY (24"x48") SQUARE PERFORATED TUBULAR STEEL SIGN POST AND ANCHOR BASE	8	8		1																										
SN-2.43	936	C-19 (24'x12') & (12'x3') INSTALL ON NEW CANTILEVER STRUCTURE	14.65		324																											
SN-2.43	939	R2-1 (48"x60") 2-4"x6"		20			36																									
SN-2.43	940	R2-1 (48"x60") 2-4"x6"		20			36																									
SN-2.43	947	GM-102 (12'x7') 2-W6x12 GALVANIZED STEEL BEAMS	2.2		84													29.5														
SN-2.43	960	GM-192 R4-5(3) (48"x84") 1-6"x8"		28					21																							
SN-2.43	961	GM-193 R4-5(3) (48"x84") 2-6"x6"		28				42																								
SN-2.43	964	C-20 (20'x10') & (12'x3') INSTALL ON EXISTING CANTILEVER STRUCTURE			236														104													
SN-2.43	967	GM-41 (15'x11') 2-W10x22 GALVANIZED STEEL BEAMS	4.6		165																					46.5			22			
SN-2.43	968	GM-195 R4-5(3) (48"x84") 2-6"x6"		28				42																								
SN-2.43	969	GM-194 R4-5(3) (48"x84") 1-6"x8"		28					21																							
SN-2.43	974	WI-2(L) BLK/FY (48"x48"), WI3-1 BLK/FY (30"x30") 2-4"x6"		22.25			39																									
SN-2.43	975	WI-2(L) BLK/FY (48"x48"), WI3-1 BLK/FY (30"x30") 2-4"x6"		22.25			39																									
SN-2.43		ITEM NOS. 8, 9, 25 & 26								287	499.3125																2	9.33				
SN-2.44	976	R2-1 (48"x60") 2-4"x6"		20			36																									
SN-2.44	977	R2-1 (48"x60") 2-4"x6"		20			36																									
SN-2.44	978	GM-103 (13'x8') 2-W8x18 GALVANIZED STEEL BEAMS	2.8		104																36											
SN-2.44	985	C-52a (14'x10'), C-52b (20'x10') & (12'x3') INSTALL ON NEW CANTILEVER STRUCTURE	15.9		376																											
SN-2.44	987	OM-3(R) BLK/FY (12"x36") SQUARE PERFORATED TUBULAR STEEL SIGN POST AND ANCHOR BASE		3		1																										
SN-2.44	988	GM-115 (9'x5') 2-W6x9 GALVANIZED STEEL BEAMS	2.2		45												27.5															
SN-2.44	994	GM-121 (9'x5') 2-W6x9 GALVANIZED STEEL BEAMS	2.2		45												27															
SN-2.44	999	GM-43 (13'x8') INSTALL ON EXISTING GALVANIZED STEEL BEAMS			104																											
SN-2.44	1007	WI-2(L) BLK/FY (48"x48"), WI3-1 BLK/FY (30"x30") 2-4"x6"		22.25			39																									
SN-2.44	1008	WI-2(L) BLK/FY (48"x48"), WI3-1 BLK/FY (30"x30") 2-4"x6"		22.25			39																									
SN-2.44	1938	OM-3(R) BLK/FY (12"x36") SQUARE PERFORATED TUBULAR STEEL SIGN POST AND ANCHOR BASE		3		1																										
SN-2.44		ITEM NOS. 9 & 10									338.5	1																				
SN-2.45	1022	GM-246 R4-5(3) (48"x84") 2-6"x6"		28				42																								
SN-2.45	1023	GM-245 R4-5(3) (48"x84") 1-6"x8"		28					21																							
SN-2.45	1029	R2-1 (48"x60") 2-4"x6"		20			36																									
SN-2.45	1030	R2-1 (48"x60") 2-4"x6"		20			36																									
SN-2.45	1034	M3-3 (30"x15"), M1-1 (36"x36"), R95-3 (24"x24") SQUARE PERFORATED TUBULAR STEEL SIGN POST & ANCHOR BASE		16.125		2																										
SN-2.45	1038	OM-3(R) BLK/FY (12"x36") SQUARE PERFORATED TUBULAR STEEL SIGN POST AND ANCHOR BASE		3		1																										
SN-2.45	1039	C-35 (16'x12') & (12'x3') INSTALL ON EXISTING CANTILEVER STRUCTURE			228														117													
SN-2.45	1042	GM-196(84"x16"),OM-3(R) BLK/FY(12"x36") SQUARE PERFORATED TUBULAR STEEL SIGN POST & ANCHOR BASE		12.33		2																										
SN-2.45	1045	OM-3(L) BLK/FY (12"x36") SQUARE PERFORATED TUBULAR STEEL SIGN POST AND ANCHOR BASE		3		1																										
SN-2.45	1046	OM-3(L) BLK/FY (12"x36") SQUARE PERFORATED TUBULAR STEEL SIGN POST AND ANCHOR BASE		3		1																										
SN-2.45	1047	GM-197(84"x16"),OM-3(R) BLK/FY(12"x36") SQUARE PERFORATED TUBULAR STEEL SIGN POST & ANCHOR BASE		12.33		2																										
SN-2.45	1049	RI-2 (60"x60"x60") SQUARE PERFORATED TUBULAR STEEL SIGN POST AND ANCHOR BASE		11		2																										
SN-2.45	1052	W4-1(R) BLK/FY (48"x48") SQUARE PERFORATED TUBULAR STEEL SIGN POST AND ANCHOR BASE		16		2																										
SN-2.45	1056	R95-2 (24"x30"), R3-1 (36"x36") SQUARE PERFORATED TUBULAR STEEL SIGN POST AND ANCHOR BASE		14		2																										
SN-2.45	1060	R95-2 (24"x30"), R5-1 (36"x36") SQUARE PERFORATED TUBULAR STEEL SIGN POST AND ANCHOR BASE		14		2																										
SN-2.45	1061	R95-2 (24"x30"), R5-1 (36"x36") SQUARE PERFORATED TUBULAR STEEL SIGN POST AND ANCHOR BASE		14		2																										
SN-2.45	1062	RI-2 (60"x60"x60") SQUARE PERFORATED TUBULAR STEEL SIGN POST AND ANCHOR BASE		11		2																										
SN-2.45	1065	W4-1(R) BLK/FY (48"x48") INSTALL ON EXISTING SIGN SUPPORT		16																												
1 SN-2.45	1067	OH-4c RI3-1(1) MOD (14' x 7') INSTALL ON EXISTING OVERHEAD STRUCTURE			1 98														1 64													
SN-2.45		ITEM NOS. 8 & 9								302	228.125																					
SN-2.46	13	WI3-2 BLK/FY (48"x60") 2-4"x6"		20			36																									
SN-2.46	14	WI3-2 BLK/FY (48"x60") 2-4"x6"		20			36												1													
SUBTOTALS FOR SN-11.07			44.55 8	666.16	1809 1	34	480	126	63	589	065.937	1	0	0	0	0	54.5	29.5	285 1	0	36	0	0	0	0	46.5	2	9.33	22	0	0	0

• CODE NUMBER DESCRIPTION & UNIT

CODE NO.	DESCRIPTION	UNIT	CODE NO.	DESCRIPTION	UNIT	CODE NO.	DESCRIPTION	UNIT	CODE NO.	DESCRIPTION	UNIT
1	CONCRETE FOR SIGN FOUNDATION	CY	9	REMOVE EXISTING GROUND MOUNTED SIGNS AND SUPPORTS	SF	17	OVERHEAD SIGN/LUMINAIRE "I" SUPPORT	LF	25	REMOVE EXISTING OVERHEAD SIGN STRUCTURE - BRIDGE MOUNTED	EA
2	SHEET ALUMINUM SIGNS	SF	10	REMOVE EXISTING CANTILEVER STRUCTURE AND SIGNS AND SUPPORTS	EA	18	GALVANIZED STEEL BEAMS (W6X16)	LF	26	REMOVE EXISTING BRIDGE MOUNTED SIGNS AND SUPPORTS	SF
3	EXTRUDED ALUMINUM SIGNS	SF	11	REMOVE EXISTING OVERHEAD SIGN STRUCTURE AND SIGNS AND SUPPORTS	EA	19	GALVANIZED STEEL BEAMS (W8X18)	LF	27	ADD STIFFENER ANGLE TO SIGNS	LF
4	SQUARE PERFORATED TUBULAR STEEL SIGN POST AND ANCHOR BASE	EA	12	BAND SIGN TO SIGN SUPPORT	EA	20	GALVANIZED STEEL BEAMS (W8X21)	LF	28	GALVANIZED STEEL BEAMS (W10x26)	LF
5	WOOD SIGN SUPPORTS 4 INCH X 6 INCH	LF	13	RELOCATE EXISTING GROUND MOUNTED SIGNS	SF	21	GALVANIZED STEEL BEAMS (W14X30)	LF	29	GALVANIZED STEEL BEAMS (W12x26)	LF
6	WOOD SIGN SUPPORTS 6 INCH X 6 INCH	LF	14	BREAKAWAY BASE SUPPORT SYSTEM FOR STEEL BEAMS	EA	22	GALVANIZED STEEL BEAMS (W18X35)	LF	30	GALVANIZED STEEL BEAMS (W6X15)	LF
7	WOOD SIGN SUPPORTS 6 INCH X 8 INCH	LF	15	GALVANIZED STEEL BEAMS (W6X9)	LF	23	GALVANIZED STEEL BEAMS (W18X40)	LF			
8	REMOVE SIGNS FROM EXISTING OVERHEAD STRUCTURE	SF	16	GALVANIZED STEEL BEAMS (W6X12)	LF	24	GALVANIZED STEEL BEAMS (W10X22)	LF			

WR&A
Whitman, Requardt and Associates, LLP
Engineers and Planners
801 S. Caroline Street
Baltimore, Maryland 21231
(410) 235-3450

Maryland Transportation Authority
Engineering Division

ADDENDUMS & REVISIONS

NO.	DESCRIPTION	BY	DATE
1	SHEET REVISED	NML	8/13/10
8	SHEET REVISED	NML	8/26/10

M:\3150903\NorthernRegion\195\sn1107_JFK.dgn OCTOBER 2009

UPGRADE AND REPLACE EXISTING SIGNING NORTHERN REGION
JOHN F. KENNEDY MEMORIAL HIGHWAY
THOMAS J. HATEM MEMORIAL BRIDGE
SIGNING QUANTITIES

DESIGNED BY J. MOCNY DRAWN BY J.CHENG CHECKED BY N. LEARY
CONST. REVIEW BY DATE OCTOBER 2009 SCALE N.T.S.

CONTRACT NO. MA-679-000-002
DRAWING NO. SN-11.07
SHEET NO. 162 OF 169

DRILL HOLES
DRILL HOLES
DRILL HOLES

DRILL HOLES

DRILL HOLES

DRILL HOLES

SHEET NO.	SIGN NO.	REMARKS	CODE NUMBERS 1	2	3	4	5	6	7	8	9	10	11	12	13	14	15	16	17	18	19	20	21	22	23	24	25	26	27	28	29	30
SN-2.46	1072	W4-3(R) BLK/FY (48"x48") SQUARE PERFORATED TUBULAR STEEL SIGN POST AND ANCHOR BASE		16		2																										
SN-2.46	1073	OH-5 (14'x6') INSTALL ON EXISTING OVERHEAD STRUCTURE			84																											
SN-2.46	1076	C-48 (16'x13') & (12'x3') INSTALL ON EXISTING CANTILEVER STRUCTURE			244														122													
SN-2.46	1077	OH-6 (18'x9') INSTALL ON EXISTING OVERHEAD STRUCTURE			162																								12			
SN-2.46	1082	GM-44 (48"x60") 2-4"x6"		20			36																									
SN-2.46	1083	R2-1 (48"x60") 2-4"x6"		20			36																									
SN-2.46	1084	R2-1 (48"x60") 2-4"x6"	8	20			36																									
SN-2.46	1087	C-49 (23'x15') & (12'x3') INSTALL ON NEW CANTILEVER STRUCTURE	15.38		381																											
SN-2.46	1089	GM-198(78"x16"),OM-3(1)R BLK/FY(24"x48") SQUARE PERFORATED TUBULAR STEEL SIGN POST & ANCHOR BASE		16.67		2																										
SN-2.46		ITEM NOS. 8 & 9								663	77																					
SN-2.47	1095	OM-3(1)L BLK/FY (24"x48") SQUARE PERFORATED TUBULAR STEEL SIGN POST AND ANCHOR BASE		8		1																										
SN-2.47	1096	GM-199(78"x16"),OM-3(1)R BLK/FY(24"x48") SQUARE PERFORATED TUBULAR STEEL SIGN POST & ANCHOR BASE		16.67		2																										
SN-2.47	1099	C-21 (10'x10') INSTALL ON EXISTING CANTILEVER STRUCTURE			100																								8			
SN-2.47	1102	OM-1(1) FY (18"x18") SQUARE PERFORATED TUBULAR STEEL SIGN POST AND ANCHOR BASE		2.25		1																										
SN-2.47	1103	GM-45 E5-1(9) (7'x7') 1-W14x30 GALVANIZED STEEL BEAM	2.9		49											1							16									
SN-2.47	1943	GM-258 (9'x7') 2-W6x12 GALVANIZED STEEL BEAMS	2.2		63													34.5														
SN-2.47	1948	GM-257 (9'x7') 2-W6x12 GALVANIZED STEEL BEAMS	2.2		63													33.5														
SN-2.47		ITEM NOS. 8, 9 & 25								153	231.25																2					
SN-2.48	1108	GM-49 (7'x7') 2-W6x12 GALVANIZED STEEL BEAMS	2.2		49													34.5														
SN-2.48	1117	R1-2 (48"x48"x48") SQUARE PERFORATED TUBULAR STEEL SIGN POST AND ANCHOR BASE		7		1																										
SN-2.48		ITEM NO. 9									157.625																					
SN-2.49	1121	GM-51 E5-1(3) (5'x7') 1-W8x21 GALVANIZED STEEL BEAM	1.5		35											1						17										
SN-2.49	1122	OM-1(1) FY (18"x18") SQUARE PERFORATED TUBULAR STEEL SIGN POST AND ANCHOR BASE		2.25		1																										
SN-2.49	1123	W13-3 BLK/FY (36"x48") SQUARE PERFORATED TUBULAR STEEL SIGN POST AND ANCHOR BASE		12		2																										
SN-2.49	1942	GM-259 (15'x10') 2-W8x21 GALVANIZED STEEL BEAM	3		150											2						41.5							20			
SN-2.49		ITEM NO. 9									174.25																					
SN-2.50	1127	M4-5 (24"x12"), M1-4 (24"x24"), M6-1(L) (21"x15") SQ. PERF. TUB. STL. SP & AB		8.1875		1																										
SN-2.50	1128	GM-53 (7'x7') 1-W14x30 GALVANIZED STEEL BEAM	2.9		49											1							15									
SN-2.51	1129	GM-54 (7'x7') 1-W14x30 GALVANIZED STEEL BEAM	2.9		49											1							15.5									
SN-2.51	1134	GM-55 (7'x7') 1-W14x30 GALVANIZED STEEL BEAM	2.9		49											1							15									
SN-2.51	1140	R2-1 (24"x30") SQUARE PERFORATED TUBULAR STEEL SIGN POST AND ANCHOR BASE		5		1																										
SN-2.51	1141	W13-2(1)MOD BLK/FY (48"x72") 1-6"x8"		24					20																							
SN-2.51	1143	OM-1(1) FY (18"x18") SQUARE PERFORATED TUBULAR STEEL SIGN POST AND ANCHOR BASE		2.25		1																										
SN-2.51	1144	GM-56 E5-1(3) (5'x8') 1-W10x22 GALVANIZED STEEL BEAM	2.3		40											1										16.5						
SN-2.51	1150	R1-2 (48"x48"x48"), R5-1 (36"x36) SQUARE PERFORATED TUBULAR STEEL SIGN POST AND ANCHOR BASE		16		1																										
SN-2.51	1152	R1-2 (48"x48"x48") SQUARE PERFORATED TUBULAR STEEL SIGN POST AND ANCHOR BASE		7		1																										
SN-2.51	1154	R5-1 (30"x30") SQUARE PERFORATED TUBULAR STEEL SIGN POST AND ANCHOR BASE		6.25		1																										
SN-2.51	1953	R1-2 (48"x48"x48") SQUARE PERFORATED TUBULAR STEEL SIGN POST AND ANCHOR BASE		7		1																										
SN-2.51		ITEM NO. 9									199.188																					
SN-2.52	1950	GM-262 (15'x10') 2-W8x18 GALVANIZED STEEL BEAM	2.8		150											2					37.5								20			
SN-2.52		ITEM NO. 9									137.5																					
SN-2.53	15	W13-2 BLK/FY (48"x60") 2-4"x6"		20			36																									
SN-2.53	1158	GM-58 (7'x7') 1-W14x30 GALVANIZED STEEL BEAM	2.9		49											1							15									
SN-2.53	1163	W4-1(R) BLK/FY (48"x48") SQUARE PERFORATED TUBULAR STEEL SIGN POST AND ANCHOR BASE		16		2																										
SN-2.53	1168	R1-2 (60"x60"x60") SQUARE PERFORATED TUBULAR STEEL SIGN POST AND ANCHOR BASE		11		2																										
SN-2.53	1169	OM-3(L) BLK/FY (12"x36") SQUARE PERFORATED TUBULAR STEEL SIGN POST AND ANCHOR BASE		3		1																										
SN-2.53	1170	GM-200(84"x16"),OM-3(R) BLK/FY(12"x36") SQUARE PERFORATED TUBULAR STEEL SIGN POST & ANCHOR BASE		12.33		2																										
SN-2.53	1171	GM-201(84"x16"),OM-3(R) BLK/FY(12"x36") SQUARE PERFORATED TUBULAR STEEL SIGN POST & ANCHOR BASE		12.33		2																										
SN-2.53	1172	OM-3(L) BLK/FY (12"x36") SQUARE PERFORATED TUBULAR STEEL SIGN POST AND ANCHOR BASE	8	3		1																										
SN-2.53	1177	OH-7a (10'x10'), OH-7b (20'x15') & (12'x3') INSTALL ON NEW OVERHEAD STRUCTURE	76.36		436																											
SUBTOTALS FOR SN-11.08			122.44 8	294	2202	29	144	0	20	816	977	0	0	0	0	11	0	103	122	0	38	59	77	0	0	17	2	0	60	0	0	0

• CODE NUMBER DESCRIPTION & UNIT

CODE NO.	DESCRIPTION	UNIT	CODE NO.	DESCRIPTION	UNIT	CODE NO.	DESCRIPTION	UNIT	CODE NO.	DESCRIPTION	UNIT
1	CONCRETE FOR SIGN FOUNDATION	CY	9	REMOVE EXISTING GROUND MOUNTED SIGNS AND SUPPORTS	SF	17	OVERHEAD SIGN/LUMINAIRE "I" SUPPORT	LF	25	REMOVE EXISTING OVERHEAD SIGN STRUCTURE - BRIDGE MOUNTED	EA
2	SHEET ALUMINUM SIGNS	SF	10	REMOVE EXISTING CANTILEVER STRUCTURE AND SIGNS AND SUPPORTS	EA	18	GALVANIZED STEEL BEAMS (W6X16)	LF	26	REMOVE EXISTING BRIDGE MOUNTED SIGNS AND SUPPORTS	SF
3	EXTRUDED ALUMINUM SIGNS	SF	11	REMOVE EXISTING OVERHEAD SIGN STRUCTURE AND SIGNS AND SUPPORTS	EA	19	GALVANIZED STEEL BEAMS (W8X18)	LF	27	ADD STIFFENER ANGLE TO SIGNS	LF
4	SQUARE PERFORATED TUBULAR STEEL SIGN POST AND ANCHOR BASE	EA	12	BAND SIGN TO SIGN SUPPORT	EA	20	GALVANIZED STEEL BEAMS (W8X21)	LF	28	GALVANIZED STEEL BEAMS (W10x26)	LF
5	WOOD SIGN SUPPORTS 4 INCH X 6 INCH	LF	13	RELOCATE EXISTING GROUND MOUNTED SIGNS	SF	21	GALVANIZED STEEL BEAMS (W14X30)	LF	29	GALVANIZED STEEL BEAMS (W12x26)	LF
6	WOOD SIGN SUPPORTS 6 INCH X 6 INCH	LF	14	BREAKAWAY BASE SUPPORT SYSTEM FOR STEEL BEAMS	EA	22	GALVANIZED STEEL BEAMS (W18X35)	LF	30	GALVANIZED STEEL BEAMS (W6X15)	LF
7	WOOD SIGN SUPPORTS 6 INCH X 8 INCH	LF	15	GALVANIZED STEEL BEAMS (W6X9)	LF	23	GALVANIZED STEEL BEAMS (W18X40)	LF			
8	REMOVE SIGNS FROM EXISTING OVERHEAD STRUCTURE	SF	16	GALVANIZED STEEL BEAMS (W6X12)	LF	24	GALVANIZED STEEL BEAMS (W10X22)	LF			

WR&A
Whitman, Requardt and Associates, LLP
Engineers and Planners
801 S. Caroline Street
Baltimore, Maryland 21231
(410) 235-3450

Maryland Transportation Authority
Engineering Division

ADDENDUMS & REVISIONS

NO.	DESCRIPTION	BY	DATE
8	SHEET REVISED	NML	8/26/10

M:\3150903\NorthernRegion\195\sn1108_JFK.dgn OCTOBER 2009

UPGRADE AND REPLACE EXISTING SIGNING NORTHERN REGION
JOHN F. KENNEDY MEMORIAL HIGHWAY
THOMAS J. HATEM MEMORIAL BRIDGE

SIGNING QUANTITIES

DESIGNED BY J. MOCNY DRAWN BY J.CHENG CHECKED BY N. LEARY
CONST. REVIEW BY DATE OCTOBER 2009 SCALE N.T.S.

CONTRACT NO. MA-679-000-002
DRAWING NO. SN-11.08
SHEET NO. 163 OF 169

DRILL HOLES

DRILL HOLES

DRILL HOLES

SHEET NO.	SIGN NO.	REMARKS	CODE NUMBERS 1	2	3	4	5	6	7	8	9	10	11	12	13	14	15	16	17	18	19	20	21	22	23	24	25	26	27	28	29	30
SN-2.53	1182	M3-1 (30"x15"), MI-1 (36"x36"), R95-3 (24"x24") SQUARE PERFORATED TUBULAR STEEL SIGN POST & ANCHOR BASE		16.125		2																										
SN-2.53	1188	R2-1 (48"x60") 2-4"x6"		20			36																									
SN-2.53	1189	R2-1 (48"x60") 2-4"x6"		20			36																									
SN-2.53	1194	OH-8b (16'x12') & (12'x3') INSTALL ON EXISTING OVERHEAD STRUCTURE			228																											
SN-2.53	1195	GM-64 (12'x7') 2-W6x15 GALVANIZED STEEL BEAMS	2.4		84																											37
SN-2.53	1200	GM-123 R4-5(6) (6'x6') 1-W8x21 GALVANIZED STEEL BEAM	1.5		36											1						15.5										
SN-2.53	1201	GM-122 R4-5(6) (6'x6') 2-W6x9 GALVANIZED STEEL BEAMS	2.2		36												27.5															
SN-2.53		ITEM NOS. 8,9 & 11								228	258.125		1																			
SN-2.54	1204	GM-65 (15'x11') INSTALL ON EXISTING GALVANIZED STEEL BEAMS			165																								30			
SN-2.54	1213	C-25 (16'x12') & (12'x3') INSTALL ON EXISTING CANTILEVER STRUCTURE			228																											
SN-2.54	1228	GM-202(54"x16"),OM-3(1)R BLK/FY(24"x48") SQUARE PERFORATED TUBULAR STEEL SIGN POST & ANCHOR BASE		14		2																										
SN-2.54	1229	OM-3(11)L BLK/FY (24"x48") SQUARE PERFORATED TUBULAR STEEL SIGN POST AND ANCHOR BASE		8		1																										
SN-2.54	1230	GM-203(54"x16"),OM-3(1)R BLK/FY(24"x48") SQUARE PERFORATED TUBULAR STEEL SIGN POST & ANCHOR BASE		14		2																										
SN-2.54	1231	OM-3(11)L BLK/FY (24"x48") SQUARE PERFORATED TUBULAR STEEL SIGN POST AND ANCHOR BASE		8		1																										
SN-2.54		ITEM NOS. 8, 9 & 26								228	248																	16				
SN-2.55	1246	GM-205 R4-5(3) (48"x84") 2-6"x6"		28				42																								
SN-2.55	1247	GM-204 R4-5(3) (48"x84") 1-6"x8"	3	28					21																							
SN-2.55	1255	DMS*11, DMS-11a/b 2-1-3(1) (42"x24") INSTALL ON NEW OVERHEAD STRUCTURE	47.55	14										2																		
SN-2.55	1256	OM-3(1)L BLK/FY (24"x48") SQUARE PERFORATED TUBULAR STEEL SIGN POST AND ANCHOR BASE		8		1																										
SN-2.55	1257	GM-207(72"x16"),OM-3(1)R BLK/FY(24"x48") SQUARE PERFORATED TUBULAR STEEL SIGN POST & ANCHOR BASE		16		2																										
SN-2.55	1258	GM-206(72"x16"),OM-3(1)R BLK/FY(24"x48") SQUARE PERFORATED TUBULAR STEEL SIGN POST & ANCHOR BASE		16		2																										
SN-2.55	1259	OM-3(11)L BLK/FY (24"x48") SQUARE PERFORATED TUBULAR STEEL SIGN POST AND ANCHOR BASE		8		1																										
SN-2.55	1262	R2-1 (48"x60") 2-4"x6"		20			36																									
SN-2.55	1263	R2-1 (48"x60") 2-4"x6"		20			36																									
SN-2.55	1267	M3-3 (30"x15"), MI-1 (36"x36"), R95-3 (24"x24") SQUARE PERFORATED TUBULAR STEEL SIGN POST & ANCHOR BASE		16.125		2																										
SN-2.55	1275	W13-2 BLK/FY (48"x60") 2-4"x6"		20			36																									
SN-2.55	1276	OM-1(1) FY (18"x18") SQUARE PERFORATED TUBULAR STEEL SIGN POST AND ANCHOR BASE		2.25		1																										
SN-2.55		ITEM NOS. 8,9,10 & 26								84	180	1																16				
SN-2.56	1281	W4-1(L) BLK/FY (48"x48") SQUARE PERFORATED TUBULAR STEEL SIGN POST AND ANCHOR BASE		16		2																										
SN-2.56	1288	R95-2 (24"x30"), R3-1 (36"x36") SQUARE PERFORATED TUBULAR STEEL SIGN POST & ANCHOR BASE		14		2																										
SN-2.56	1291	R95-2 (24"x30"), R3-1 (36"x36") SQUARE PERFORATED TUBULAR STEEL SIGN POST & ANCHOR BASE		14		2																										
SN-2.56	1921	R1-2 (60"x60"x60") SQUARE PERFORATED TUBULAR STEEL SIGN POST AND ANCHOR BASE		11		2																										
SN-2.56		ITEM NO. 9									28																					
SN-2.57	1295	OM-1(1) FY (18"x18") SQUARE PERFORATED TUBULAR STEEL SIGN POST AND ANCHOR BASE		2.25		1																										
SN-2.57	1297	W13-2 BLK/FY (48"x60") 2-4"x6"		20			36																									
SN-2.57		ITEM NOS. 8 & 9								84	12																					
SN-2.58	1314	M3-1 (30"x15"), MI-1 (36"x36"), R95-3 (24"x24") SQUARE PERFORATED TUBULAR STEEL SIGN POST & ANCHOR BASE		16.125		2																										
SN-2.58	1317	R2-1 (48"x60") 2-4"x6"		20			36																									
SN-2.58	1318	R2-1 (48"x60") 2-4"x6"		20			36																									
SN-2.58	1323	GM-208 R4-5(3) (48"x84") 2-6"x6"		28				42																								
SN-2.58	1324	GM-209 R4-5(3) (48"x84") 2-6"x6"		28				42																								
SN-2.58	1325	OM-3(L) BLK/FY (12"x36") SQUARE PERFORATED TUBULAR STEEL SIGN POST AND ANCHOR BASE		3		1																										
SN-2.58	1326	GM-210(72"x16"),OM-3(R) BLK/FY(12"x36") SQUARE PERFORATED TUBULAR STEEL SIGN POST & ANCHOR BASE		11		2																										
SN-2.58	1327	GM-211(72"x16"),OM-3(R) BLK/FY(12"x36") SQUARE PERFORATED TUBULAR STEEL SIGN POST & ANCHOR BASE		11		2																										
SN-2.58	1328	OM-3(L) BLK/FY (12"x36") SQUARE PERFORATED TUBULAR STEEL SIGN POST AND ANCHOR BASE		3		1																										
SN-2.58	1331	GM-67 (15'x11') INSTALL ON EXISTING GALVANIZED STEEL BEAMS	3		165																								30			
SN-2.58	1339	DMS*12, DMS-12a/b 2-1-3(1) (42"x24") INSTALL ON NEW OVERHEAD STRUCTURE	50.43	14										2																		
SN-2.58		ITEM NOS. 9 & 10									270	1																				
SN-2.59	1360	GM-68 (15'x7') 2-W8x18 GALVANIZED STEEL BEAMS	2.8		105																34.5								14			
SN-2.59	1379	R2-1 (48"x60") 2-4"x6"		20			36																									
SUBTOTALS FOR SN-11.09			106.88 3	548	1047	34	324	126	21	624	996	2	1	4	0	1	28	0	0	0	35	16	0	0	0	0	0	32	74	0	0	37

* CODE NUMBER DESCRIPTION & UNIT

CODE NO.	DESCRIPTION	UNIT	CODE NO.	DESCRIPTION	UNIT	CODE NO.	DESCRIPTION	UNIT	CODE NO.	DESCRIPTION	UNIT
1	CONCRETE FOR SIGN FOUNDATION	CY	9	REMOVE EXISTING GROUND MOUNTED SIGNS AND SUPPORTS	SF	17	OVERHEAD SIGN/LUMINAIRE "I" SUPPORT	LF	25	REMOVE EXISTING OVERHEAD SIGN STRUCTURE - BRIDGE MOUNTED	EA
2	SHEET ALUMINUM SIGNS	SF	10	REMOVE EXISTING CANTILEVER STRUCTURE AND SIGNS AND SUPPORTS	EA	18	GALVANIZED STEEL BEAMS (W6X16)	LF	26	REMOVE EXISTING BRIDGE MOUNTED SIGNS AND SUPPORTS	SF
3	EXTRUDED ALUMINUM SIGNS	SF	11	REMOVE EXISTING OVERHEAD SIGN STRUCTURE AND SIGNS AND SUPPORTS	EA	19	GALVANIZED STEEL BEAMS (W8X18)	LF	27	ADD STIFFENER ANGLE TO SIGNS	LF
4	SQUARE PERFORATED TUBULAR STEEL SIGN POST AND ANCHOR BASE	EA	12	BAND SIGN TO SIGN SUPPORT	EA	20	GALVANIZED STEEL BEAMS (W8X21)	LF	28	GALVANIZED STEEL BEAMS (W10x26)	LF
5	WOOD SIGN SUPPORTS 4 INCH X 6 INCH	LF	13	RELOCATE EXISTING GROUND MOUNTED SIGNS	SF	21	GALVANIZED STEEL BEAMS (W14X30)	LF	29	GALVANIZED STEEL BEAMS (W12x26)	LF
6	WOOD SIGN SUPPORTS 6 INCH X 6 INCH	LF	14	BREAKAWAY BASE SUPPORT SYSTEM FOR STEEL BEAMS	EA	22	GALVANIZED STEEL BEAMS (W18X35)	LF	30	GALVANIZED STEEL BEAMS (W6X15)	LF
7	WOOD SIGN SUPPORTS 6 INCH X 8 INCH	LF	15	GALVANIZED STEEL BEAMS (W6X9)	LF	23	GALVANIZED STEEL BEAMS (W18X40)	LF			
8	REMOVE SIGNS FROM EXISTING OVERHEAD STRUCTURE	SF	16	GALVANIZED STEEL BEAMS (W6X12)	LF	24	GALVANIZED STEEL BEAMS (W10X22)	LF			

WR&A
Whitman, Requardt and Associates, LLP
Engineers and Planners
801 S. Caroline Street
Baltimore, Maryland 21231
(410) 235-3450

Maryland Transportation Authority
Engineering Division

ADDENDUMS & REVISIONS

NO.	DESCRIPTION	BY	DATE
3	SHEET REVISED	NML	08/26/10

M:\3150903\NorthernRegion\195\sn1109_JFK.dgn OCTOBER 2009

UPGRADE AND REPLACE EXISTING SIGNING NORTHERN REGION
JOHN F. KENNEDY MEMORIAL HIGHWAY
THOMAS J. HATEM MEMORIAL BRIDGE

SIGNING QUANTITIES

DESIGNED BY J. MOCNY DRAWN BY J.CHENG CHECKED BY N. LEARY
CONST. REVIEW BY DATE OCTOBER 2009 SCALE N.T.S.

CONTRACT NO. MA-679-000-002
DRAWING NO. SN-11.09
SHEET NO. 164 OF 169

DRILL HOLES

DRILL HOLES

DRILL HOLES

SHEET NO.	SIGN NO.	REMARKS	CODE NUMBERS 1	2	3	4	5	6	7	8	9	10	11	12	13	14	15	16	17	18	19	20	21	22	23	24	25	26	27	28	29	30
SN-2.59	1380	R2-1 (48"x60") 2-4"x6"		20			36																									
SN-2.60	1385	M3-3 (30"x15"), M1-1 (36"x36"), R95-3 (24"x30") SQUARE PERFORATED TUBULAR STEEL SIGN POST & ANCHOR BASE		16.125		2																										
SN-2.59		ITEM NO.9									307																					
SN-2.60	1390	W13-2 BLK/FY (48"x60") 2-4"x6"		20			36																									
SN-2.60	1393	R1-2 (60"x60"x60") SQUARE PERFORATED TUBULAR STEEL SIGN POST AND ANCHOR BASE		11		2																										
SN-2.60	1394	W4-1(R) BLK/FY (48"x48") 1-TS 6x4x3/8 GALVANIZED POST (17 LF)		16																												
SN-2.60	1397	R1-2 (60"x60"x60") SQUARE PERFORATED TUBULAR STEEL SIGN POST AND ANCHOR BASE		11		2																										
SN-2.60	1400	W4-1(R) BLK/FY (48"x48") SQUARE PERFORATED TUBULAR STEEL SIGN POST AND ANCHOR BASE		16		2																										
SN-2.60		ITEM NOS. 8 & 9								77	65																					
SN-2.61	16	W13-2(1)MOD BLK/FY (48"x72") 2-4"x6"		24			38																									
SN-2.61	1406	GM-70 E5-1(11) (7'x8') 1-W18x 35 GALVANIZED STEEL BEAM	3.5		56											1								16.5								
SN-2.61	1407	OM-1(1) FY (18"x18") SQUARE PERFORATED TUBULAR STEEL SIGN POST AND ANCHOR BASE		2.25		1																										
SN-2.61	1411	W13-2(1) BLK/FY (48"x72") 1-6"x8"		24					20																							
SN-2.61	1412	R1-2 (48"x48"x48") SQUARE PERFORATED TUBULAR STEEL SIGN POST AND ANCHOR BASE		7		1																										
SN-2.61	1414	OM-3(1)L BLK/FY (24"x48") SQUARE PERFORATED TUBULAR STEEL SIGN POST AND ANCHOR BASE		8		1																										
SN-2.61	1415	GM-212 (78"x16") SQUARE PERFORATED TUBULAR STEEL SIGN POST & ANCHOR BASE		8.67		2																										
SN-2.61	1420	GM-71 E5-1(3) (5'x8') 1-W10x26 GALVANIZED STEEL BEAM	2.4		40											1														17		
SN-2.61	1421	OM-1(1) FY (18"x18") SQUARE PERFORATED TUBULAR STEEL SIGN POST AND ANCHOR BASE		2.25		1																										
SN-2.61	1422	C-30 (13'x10') INSTALL ON EXISTING CANTILEVER STRUCTURE			130																											
SN-2.61	1423	GM-213(78"x16"),OM-3(1)R BLK/FY(24"x48") SQUARE PERFORATED TUBULAR STEEL SIGN POST & ANCHOR BASE		16.67		2																										
SN-2.61	1424	OM-3(1)L BLK/FY (24"x48") SQUARE PERFORATED TUBULAR STEEL SIGN POST AND ANCHOR BASE		8		1																										
SN-2.61	1952	C-54 (36"x36") INSTALL OVERLAY ON EXISTING SIGN		9																												
SN-2.61		ITEM NOS. 8 & 9								160	133.5																					
SN-2.62	1429	W1-11 BLK/FY (36"x36"), W13-1 BLK/FY (24"x30") SQUARE PERFORATED TUBULAR STEEL SIGN POST & ANCHOR BASE		13		2																										
SN-2.62	1430	W1-11 BLK/FY (36"x36"), W13-1 BLK/FY (24"x30") SQUARE PERFORATED TUBULAR STEEL SIGN POST & ANCHOR BASE		13		2																										
SN-2.62	1431	R1-2 (60"x60"x60") SQUARE PERFORATED TUBULAR STEEL SIGN POST AND ANCHOR BASE		11		2																										
SN-2.62	1432	W4-1(R) BLK/FY (48"x48") SQUARE PERFORATED TUBULAR STEEL SIGN POST AND ANCHOR BASE		16		2																										
SN-2.62	1435	W4-1(R) BLK/FY (48"x48") SQUARE PERFORATED TUBULAR STEEL SIGN POST AND ANCHOR BASE		16		2																										
SN-2.62	1925	W1-8 BLK/FY (24"x30") SQUARE PERFORATED TUBULAR STEEL SIGN POST AND ANCHOR BASE		5		1																										
SN-2.62	1926	W1-8 BLK/FY (24"x30") SQUARE PERFORATED TUBULAR STEEL SIGN POST AND ANCHOR BASE		5		1																										
SN-2.62	1927	W1-8 BLK/FY (24"x30") SQUARE PERFORATED TUBULAR STEEL SIGN POST AND ANCHOR BASE		5		1																										
SN-2.62	1928	W1-8 BLK/FY (24"x30") SQUARE PERFORATED TUBULAR STEEL SIGN POST AND ANCHOR BASE		5		1																										
SN-2.62	1929	W1-8 BLK/FY (24"x30") SQUARE PERFORATED TUBULAR STEEL SIGN POST AND ANCHOR BASE		5		1																										
SN-2.62	1930	W1-8 BLK/FY (24"x30") SQUARE PERFORATED TUBULAR STEEL SIGN POST AND ANCHOR BASE		5		1																										
SN-2.62		ITEM NO. 9									39																					
SN-2.63	1437	C-31 (13'x10') INSTALL ON EXISTING CANTILEVER STRUCTURE			130																											
SN-2.63	1447	OM-1(1) FY (18"x18") SQUARE PERFORATED TUBULAR STEEL SIGN POST AND ANCHOR BASE		2.25		1																										
SN-2.63	1448	W3-2 BLK/FY (36"x36") SQUARE PERFORATED TUBULAR STEEL SIGN POST AND ANCHOR BASE		9		1																										
SN-2.63	1452	R1-2 (48"x48"x48"), W4-3(1) BLK/FY (30"x30") SQ. PERF. TUB. STL. SP & AB		13.25		2																										
SN-2.63		ITEM NOS. 8 & 9								160	70.8125																					
SN-2.64	1457	W13-3 BLK/FY (36"x48") SQUARE PERFORATED TUBULAR STEEL SIGN POST AND ANCHOR BASE		12		2																										
SN-2.64	1954	GM-264 (15'x10') 2-W8x18 GALVANIZED STEEL BEAM	2.8		150											2					40											
SN-2.65	1462	R1-2 (48"x48"x48") SQUARE PERFORATED TUBULAR STEEL SIGN POST AND ANCHOR BASE		7		1																										
SN-2.65		ITEM NO. 9									7																					
SN-2.66	1463	R1-2 (48"x48"x48") SQUARE PERFORATED TUBULAR STEEL SIGN POST AND ANCHOR BASE		7		1																										
SN-2.66	1468	W13-3 BLK/FY (36"x48") SQUARE PERFORATED TUBULAR STEEL SIGN POST AND ANCHOR BASE		12		2																										
SN-2.66	1951	GM-263 (15'x10') 2-W8x18 GALVANIZED STEEL BEAM	2.8		150																38								20			
SN-2.66		ITEM NO. 9									156																					
SN-2.68	1470	R1-2 (60"x60"x60") SQUARE PERFORATED TUBULAR STEEL SIGN POST AND ANCHOR BASE		11		2																										
SUBTOTALS FOR SN-11.10			11.5	392	656	45	110	0	20	397	778	0	0	0	0	4	0	0	0	0	78	0	0	17	0	0	0	0	20	17	0	0

A

• CODE NUMBER DESCRIPTION & UNIT

CODE NO.	DESCRIPTION	UNIT	CODE NO.	DESCRIPTION	UNIT	CODE NO.	DESCRIPTION	UNIT	CODE NO.	DESCRIPTION	UNIT
1	CONCRETE FOR SIGN FOUNDATION	CY	9	REMOVE EXISTING GROUND MOUNTED SIGNS AND SUPPORTS	SF	17	OVERHEAD SIGN/LUMINAIRE "I" SUPPORT	LF	25	REMOVE EXISTING OVERHEAD SIGN STRUCTURE - BRIDGE MOUNTED	EA
2	SHEET ALUMINUM SIGNS	SF	10	REMOVE EXISTING CANTILEVER STRUCTURE AND SIGNS AND SUPPORTS	EA	18	GALVANIZED STEEL BEAMS (W6X16)	LF	26	REMOVE EXISTING BRIDGE MOUNTED SIGNS AND SUPPORTS	SF
3	EXTRUDED ALUMINUM SIGNS	SF	11	REMOVE EXISTING OVERHEAD SIGN STRUCTURE AND SIGNS AND SUPPORTS	EA	19	GALVANIZED STEEL BEAMS (W8X18)	LF	27	ADD STIFFENER ANGLE TO SIGNS	LF
4	SQUARE PERFORATED TUBULAR STEEL SIGN POST AND ANCHOR BASE	EA	12	BAND SIGN TO SIGN SUPPORT	EA	20	GALVANIZED STEEL BEAMS (W8X21)	LF	28	GALVANIZED STEEL BEAMS (W10x26)	LF
5	WOOD SIGN SUPPORTS 4 INCH X 6 INCH	LF	13	RELOCATE EXISTING GROUND MOUNTED SIGNS	SF	21	GALVANIZED STEEL BEAMS (W14X30)	LF	29	GALVANIZED STEEL BEAMS (W12x26)	LF
6	WOOD SIGN SUPPORTS 6 INCH X 6 INCH	LF	14	BREAKAWAY BASE SUPPORT SYSTEM FOR STEEL BEAMS	EA	22	GALVANIZED STEEL BEAMS (W18X35)	LF	30	GALVANIZED STEEL BEAMS (W6X15)	LF
7	WOOD SIGN SUPPORTS 6 INCH X 8 INCH	LF	15	GALVANIZED STEEL BEAMS (W6X9)	LF	23	GALVANIZED STEEL BEAMS (W18X40)	LF			
8	REMOVE SIGNS FROM EXISTING OVERHEAD STRUCTURE	SF	16	GALVANIZED STEEL BEAMS (W6X12)	LF	24	GALVANIZED STEEL BEAMS (W10X22)	LF			

WR&A
Whitman, Requardt and Associates, LLP
Engineers and Planners
801 S. Caroline Street
Baltimore, Maryland 21231
(410) 235-3450

Maryland Transportation Authority
Engineering Division

ADDENDUMS & REVISIONS

NO.	DESCRIPTION	BY	DATE
A	SHEET REVISED	NML	08/26/10

M:\3150903\NorthernRegion\I95\snI110_JFK.dgn OCTOBER 2009

UPGRADE AND REPLACE EXISTING SIGNING NORTHERN REGION
JOHN F. KENNEDY MEMORIAL HIGHWAY
THOMAS J. HATEM MEMORIAL BRIDGE

SIGNING QUANTITIES

DESIGNED BY J. MOCNY DRAWN BY J.CHENG CHECKED BY N. LEARY
CONST. REVIEW BY DATE OCTOBER 2009 SCALE N.T.S.

CONTRACT NO. MA-679-000-002
DRAWING NO. SN-11.10
SHEET NO. 165 OF 169

DRILL HOLES

DRILL HOLES

DRILL HOLES

SHEET NO.	SIGN NO.	REMARKS	CODE NUMBERS 1	2	3	4	5	6	7	8	9	10	11	12	13	14	15	16	17	18	19	20	21	22	23	24	25	26	27	28	29	30
SN-2.68	1477	W13-2 BLK/FY (48"x60") 2-4"x6"		20			36																									
SN-2.68	1483	OM-3(L) BLK/FY (12"x36") SQUARE PERFORATED TUBULAR STEEL SIGN POST AND ANCHOR BASE		3		1																										
SN-2.68	1484	GM-214 (66"x36"), OM-3(R) BLK/FY (12"x36") 2-4"x6"		19.5			31																									
SN-2.68	1487	GM-215 (66"x36"), OM-3(R) BLK/FY (12"x36") 2-4"x6"		19.5			31																									
SN-2.68	1488	OM-3(L) BLK/FY (12"x36") SQUARE PERFORATED TUBULAR STEEL SIGN POST AND ANCHOR BASE		3		1																										
SN-2.68	1489	M3-1 (30"x15"), M1-1 (36"x36"), R95-3 (24"x24") SQUARE PERFORATED TUBULAR STEEL SIGN POST & ANCHOR BASE		16.125		2																										
SN-2.68	1492	R2-1 (48"x60") 2-4"x6"		20			36																									
SN-2.68	1493	R2-1 (48"x60") 2-4"x6"		20			36																									
SN-2.68	1501	GM-216 R4-5(3) (48"x84") 1-6"x8"		28					21																							
SN-2.68	1502	GM-217 R4-5(3) (48"x84") 1-6"x8"		28					21																							
SN-2.68	1505	GM-79 (13'x7') 2-W6x12 GALVANIZED STEEL BEAMS	2.2		91													29.5														
SN-2.68	1506	OM-3(1)L BLK/FY (24"x48") SQUARE PERFORATED TUBULAR STEEL SIGN POST AND ANCHOR BASE		8		1																										
SN-2.68	1507	GM-218(78"x16"),OM-3(1)R BLK/FY(24"x48") SQUARE PERFORATED TUBULAR STEEL SIGN POST & ANCHOR BASE		16.67		2																										
SN-2.68	1508	GM-219(78"x16"),OM-3(1)R BLK/FY(24"x48") SQUARE PERFORATED TUBULAR STEEL SIGN POST & ANCHOR BASE		16.67		2																										
SN-2.68	1509	OM-3(1)L BLK/FY (24"x48") SQUARE PERFORATED TUBULAR STEEL SIGN POST AND ANCHOR BASE		8		1																										
SN-2.68	1512	W11-10(1) BLK/FY (48"x48") SQUARE PERFORATED TUBULAR STEEL SIGN POST AND ANCHOR BASE		16		2																										
SN-2.68		ITEM NOS. 8,9 & 26								84	411.125																	16				
SN-2.69	1521	W11-10(1) BLK/FY (48"x48") SQUARE PERFORATED TUBULAR STEEL SIGN POST AND ANCHOR BASE		16		2																										
SN-2.69	1535	OM-3(L) BLK/FY (12"x36") SQUARE PERFORATED TUBULAR STEEL SIGN POST AND ANCHOR BASE		3		1																										
SN-2.69	1538	GM-220 (96"x36"), OM-3(R) (12"x36") 2-4"x6"		27			32																									
SN-2.69	1539	GM-221 (96"x36"), OM-3(R) (12"x36") 2-4"x6"		27			32																									
SN-2.69	1540	OM-3(L) BLK/FY (12"x36") SQUARE PERFORATED TUBULAR STEEL SIGN POST AND ANCHOR BASE		3		1																										
SN-2.69	1541	RELOCATED EXISTING SIGN (13'x13') INSTALL ON EXISTING GALVANIZED STEEL BEAMS													169														24			
SN-2.69	1550	GM-81 (13'x14') 2-W10x22 GALVANIZED STEEL BEAMS	4.6												182	2										45.5						
SN-2.69		ITEM NO. 9									21																					
SN-2.70	1564	GM-223 R4-5(3) (48"x84") 1-6"x8"		28					21																							
SN-2.70	1565	GM-222 R4-5(3) (48"x84") 1-6"x8"		28					21																							
SN-2.70	1568	R2-1 (48"x60") 2-4"x6"		20			36																									
SN-2.70	1569	R2-1 (48"x60") 2-4"x6"		20			36																									
SN-2.70	1578	OM-3(1)L BLK/FY (24"x48") SQUARE PERFORATED TUBULAR STEEL SIGN POST AND ANCHOR BASE		8		1																										
SN-2.70	1579	GM-224 (96"x16"), OM-3(1)R BLK/FY (24"x48") 2-4"x6"		18.67			30																									
SN-2.70	1580	GM-225 (96"x16"), OM-3(1)R BLK/FY (24"x48") 2-4"x6"		18.67			30																									
SN-2.70	1581	OM-3(1)L BLK/FY (24"x48") SQUARE PERFORATED TUBULAR STEEL SIGN POST AND ANCHOR BASE		8		1																										
SN-2.70		ITEM NOS. 9 & 26									16																	18.67				
			8																													
SN-2.71	1596	DMS*13, DMS-13a/b 2-1-3(1) (42"x24") INSTALL ON NEW OVERHEAD STRUCTURE	58.51	14										2																		
SN-2.71	1623	GM-226(66"x16"),OM-3(1)R BLK/FY(24"x48") SQUARE PERFORATED TUBULAR STEEL SIGN POST & ANCHOR BASE		15.33		2																										
SN-2.71	1624	OM-3(1)L BLK/FY (24"x48") SQUARE PERFORATED TUBULAR STEEL SIGN POST AND ANCHOR BASE		8		1																										
SN-2.71	1625	OM-3(1)L BLK/FY (24"x48") SQUARE PERFORATED TUBULAR STEEL SIGN POST AND ANCHOR BASE		8		1																										
SN-2.71	1626	GM-227(66"x16"),OM-3(1)R BLK/FY(24"x48") SQUARE PERFORATED TUBULAR STEEL SIGN POST & ANCHOR BASE		15.33		2																										
SN-2.71	1631	R2-1 (48"x60") 2-4"x6"		20			36																									
SN-2.71	1632	R2-1 (48"x60") 2-4"x6"		20			36																									
SN-2.71		ITEM NOS. 9, 10 & 26									208	1																16				
SN-2.72	1635	GM-228 R4-5(3) (48"x84") 1-6"x8"		28					21																							
SN-2.72	1636	GM-229 R4-5(3) (48"x84") 2-6"x6"		28				42																								
SN-2.72	1653	OM-3(L) BLK/FY (12"x36") SQUARE PERFORATED TUBULAR STEEL SIGN POST AND ANCHOR BASE		3		1																										
SN-2.72	1654	OM-3(R) BLK/FY (12"x36") SQUARE PERFORATED TUBULAR STEEL SIGN POST AND ANCHOR BASE		3		1																										
SN-2.72	1655	OM-3(R) BLK/FY (12"x36") SQUARE PERFORATED TUBULAR STEEL SIGN POST AND ANCHOR BASE		3		1																										
SN-2.72	1656	OM-3(L) BLK/FY (12"x36") SQUARE PERFORATED TUBULAR STEEL SIGN POST AND ANCHOR BASE		3		1																										
SN-2.72		ITEM NO. 9									46																					
SN-2.73	1667	OM-3(L) BLK/FY (12"x36") SQUARE PERFORATED TUBULAR STEEL SIGN POST AND ANCHOR BASE		3		1																										
SN-2.73	1668	GM-124 (7'x6'), OM-3(R) BLK/FY (12"x36") 2-W6x12 GALVANIZED STEEL BEAMS	2.2	3	42									1				32.5														
SN-2.73	1670	GM-125 (7'x6'), OM-3(R) BLK/FY (12"x36") 2-W6x9 GALVANIZED STEEL BEAMS	2.2	3	42									1			31															
SUBTOTALS FOR SN-11.11			69.71	645	175	29	438	42	105	84	702	1	0	4	351	2	31	62	0	0	0	0	0	0	0	46	0	51	24	0	0	0
			8																													

• CODE NUMBER DESCRIPTION & UNIT

CODE NO.	DESCRIPTION	UNIT	CODE NO.	DESCRIPTION	UNIT	CODE NO.	DESCRIPTION	UNIT	CODE NO.	DESCRIPTION	UNIT
1	CONCRETE FOR SIGN FOUNDATION	CY	9	REMOVE EXISTING GROUND MOUNTED SIGNS AND SUPPORTS	SF	17	OVERHEAD SIGN/LUMINAIRE "1" SUPPORT	LF	25	REMOVE EXISTING OVERHEAD SIGN STRUCTURE - BRIDGE MOUNTED	EA
2	SHEET ALUMINUM SIGNS	SF	10	REMOVE EXISTING CANTILEVER STRUCTURE AND SIGNS AND SUPPORTS	EA	18	GALVANIZED STEEL BEAMS (W6X16)	LF	26	REMOVE EXISTING BRIDGE MOUNTED SIGNS AND SUPPORTS	SF
3	EXTRUDED ALUMINUM SIGNS	SF	11	REMOVE EXISTING OVERHEAD SIGN STRUCTURE AND SIGNS AND SUPPORTS	EA	19	GALVANIZED STEEL BEAMS (W8X18)	LF	27	ADD STIFFENER ANGLE TO SIGNS	LF
4	SQUARE PERFORATED TUBULAR STEEL SIGN POST AND ANCHOR BASE	EA	12	BAND SIGN TO SIGN SUPPORT	EA	20	GALVANIZED STEEL BEAMS (W8X21)	LF	28	GALVANIZED STEEL BEAMS (W10x26)	LF
5	WOOD SIGN SUPPORTS 4 INCH X 6 INCH	LF	13	RELOCATE EXISTING GROUND MOUNTED SIGNS	SF	21	GALVANIZED STEEL BEAMS (W14X30)	LF	29	GALVANIZED STEEL BEAMS (W12x26)	LF
6	WOOD SIGN SUPPORTS 6 INCH X 6 INCH	LF	14	BREAKAWAY BASE SUPPORT SYSTEM FOR STEEL BEAMS	EA	22	GALVANIZED STEEL BEAMS (W18X35)	LF	30	GALVANIZED STEEL BEAMS (W6x15)	LF
7	WOOD SIGN SUPPORTS 6 INCH X 8 INCH	LF	15	GALVANIZED STEEL BEAMS (W6X9)	LF	23	GALVANIZED STEEL BEAMS (W18X40)	LF			
8	REMOVE SIGNS FROM EXISTING OVERHEAD STRUCTURE	SF	16	GALVANIZED STEEL BEAMS (W6X12)	LF	24	GALVANIZED STEEL BEAMS (W10X22)	LF			

WR&A
Whitman, Requardt and Associates, LLP
Engineers and Planners
801 S. Caroline Street
Baltimore, Maryland 21231
(410) 235-3450

Maryland Transportation Authority
Engineering Division

ADDENDUMS & REVISIONS

NO.	DESCRIPTION	BY	DATE
8	SHEET REVISED	NML	08/26/10

M:\3150903\NorthernRegion\195\sn1111_JFK.dgn OCTOBER 2009

UPGRADE AND REPLACE EXISTING SIGNING NORTHERN REGION
JOHN F. KENNEDY MEMORIAL HIGHWAY
THOMAS J. HATEM MEMORIAL BRIDGE

SIGNING QUANTITIES

DESIGNED BY J. MOCNY DRAWN BY J.CHENG CHECKED BY N. LEARY
CONST. REVIEW BY DATE OCTOBER 2009 SCALE N.T.S.

CONTRACT NO. MA-679-000-002
DRAWING NO. SN-11.11
SHEET NO. 166 OF 169

DRILL HOLES

DRILL HOLES

DRILL HOLES

SHEET NO.	SIGN NO.	REMARKS	CODE NUMBERS 1	2	3	4	5	6	7	8	9	10	11	12	13	14	15	16	17	18	19	20	21	22	23	24	25	26	27	28	29	30
SN-2.73	1672	OM-3(L) BLK/FY (12"x36") SQUARE PERFORATED TUBULAR STEEL SIGN POST AND ANCHOR BASE		3		1																										
SN-2.73	1679	GM-248 R4-5(3) (48"x84") 1-6"x8"		28					21																							
SN-2.73	1680	GM-247 R4-5(3) (48"x84") 1-6"x8"		28					21																							
SN-2.73	1685	R2-1 (48"x60") 2-4"x6"		20			36																									
SN-2.73	1686	R2-1 (48"x60") 2-4"x6"		20			36																									
SN-2.73		ITEM NO. 9									205																					
			8																													
SN-2.74	1701	DMS*14, DMS-14a/b 2-1-3(1) (42"x24") INSTALL ON NEW OVERHEAD STRUCTURE	58.66	14										2																		
SN-2.74	1703	GM-268 (FOR FUTURE 10'X8' MAX. SIGNS) 2-W6x16 GALVANIZED STEEL BEAMS	2.4													2				37												
SN-2.74	1704	OM-3(1)L BLK/FY (24"x48") SQUARE PERFORATED TUBULAR STEEL SIGN POST AND ANCHOR BASE		8		1																										
SN-2.74	1705	GM-231 (72"x36"), OM-3(1)R BLK/FY (24"x48") 2-4"x6"		26			35																									
SN-2.74	1706	GM-230 (72"x36"), OM-3(1)R BLK/FY (24"x48") 2-4"x6"		26			35																									
SN-2.74	1707	OM-3(1)L BLK/FY (24"x48") SQUARE PERFORATED TUBULAR STEEL SIGN POST AND ANCHOR BASE		8		1																										
SN-2.74	1718	GM-82 (15'x8') 2-W8x18 GALVANIZED STEEL BEAMS	2.8		120											2					36.5								16			
SN-2.74		ITEM NOS. 9, 10 & 26									128	1																16				
1 SN-2.75	1749	C-38 (14'x14') & (14'x3') INSTALL ON EXISTING CANTILEVER STRUCTURE			238																								24			
SN-2.75	1753	OM-3(L) BLK/FY (12"x36") SQUARE PERFORATED TUBULAR STEEL SIGN POST AND ANCHOR BASE		3		1																										
SN-2.75	1754	GM-83 (13'x7') 2-W8x18 GALVANIZED STEEL BEAMS	2.8		91																40											
SN-2.75	1755	GM-232(48"x36"),OM-3(R) BLK/FY(12"x36") SQUARE PERFORATED TUBULAR STEEL SIGN POST & ANCHOR BASE		15		2																										
SN-2.75	1758	GM-233(48"x36"),OM-3(R) BLK/FY(12"x36") SQUARE PERFORATED TUBULAR STEEL SIGN POST & ANCHOR BASE		15		2																										
SN-2.75	1759	OM-3(L) BLK/FY (12"x36") SQUARE PERFORATED TUBULAR STEEL SIGN POST AND ANCHOR BASE		3		1																										
SN-2.75	1764	GM-85 (10'x13') 2-W10x22 GALVANIZED STEEL BEAMS	4.6		130											2										50.5						
SN-2.75	1765	GM-235 R4-5(3) (48"x84") 2-6"x6"		28				42																								
SN-2.75	1766	GM-234 R4-5(3) (48"x84") 1-6"x8"		28					21																							
SN-2.75	1773	R2-1 (48"x60") 2-4"x6"		20			36																									
SN-2.75	1774	R2-1 (48"x60") 2-4"x6"		20			36																									
SN-2.75		ITEM NOS. 8 & 9								210	372																					
1 SN-2.76	1775	C-39 (14'x14') & (14'x3') INSTALL ON EXISTING CANTILEVER STRUCTURE			238																								24			
SN-2.76	1778	M3-3 (30"x15"), M1-1 (36"x36"), R95-3 (24"x30") SQUARE PERFORATED TUBULAR STEEL SIGN POST & ANCHOR BASE		16.125		2																										
SN-2.76	1781	OM-3(1)L BLK/FY (24"x48") SQUARE PERFORATED TUBULAR STEEL SIGN POST AND ANCHOR BASE		8		1																										
SN-2.76	1782	GM-236 (72"x36"), OM-3(1)R BLK/FY (24"x48") 2-4"x6"		26			35																									
SN-2.76	1783	GM-237 (72"x36"), OM-3(1)R BLK/FY (24"x48") 2-4"x6"		26			35																									
SN-2.76	1784	OM-3(1)L BLK/FY (24"x48") SQUARE PERFORATED TUBULAR STEEL SIGN POST AND ANCHOR BASE		8		1																										
SN-2.76		ITEM NOS. 8, 9, 25 & 26								210	108.125																1	16				
SN-2.77	1793	W13-2 BLK/FY (48"x60") 2-4"x6"		20			36																									
SN-2.77	1794	R1-2 (60"x60"x60") SQUARE PERFORATED TUBULAR STEEL SIGN POST AND ANCHOR BASE		11		2																										
SN-2.77	1795	OM-1(1) FY (18"x18") SQUARE PERFORATED TUBULAR STEEL SIGN POST AND ANCHOR BASE		2.25		1																										
SN-2.77	1797	W4-1(R) BLK/FY (48"x48") SQUARE PERFORATED TUBULAR STEEL SIGN POST AND ANCHOR BASE		16		2																										
SN-2.77	1800	W4-1(R) BLK/FY (48"x48") SQUARE PERFORATED TUBULAR STEEL SIGN POST AND ANCHOR BASE		16		2																										
SN-2.77	1801	R1-2 (60"x60"x60") SQUARE PERFORATED TUBULAR STEEL SIGN POST AND ANCHOR BASE		11		2																										
SN-2.77	1804	R1-2 (60"x60"x60") SQUARE PERFORATED TUBULAR STEEL SIGN POST AND ANCHOR BASE		11		2																										
SN-2.77	1952	C-40a(14'x12')&(12'x3'),C-40b(14'x10')&(12'x3') INSTALL ON EXISTING CANTILEVER STRUCTURE			380														202													
SN-2.77		ITEM NOS. 8 & 9								302	85.25																					
SN-2.78	17	W13-2(1) BLK/FY (48"x72") 2-4"x6"		24			38																									
SN-2.78	18	W13-2(1)MOD BLK/FY (48"x72") 2-4"x6"		24			38																									
SN-2.78	19	W13-2(1)MOD BLK/FY (48"x72") 2-4"x6"		24			38																									
SN-2.78	20	W13-2(1) BLK/FY (48"x72") 2-4"x6"		24			38																									
SN-2.78	1805	GM-87 E5-1(11) (7'x8') 1-TS 8x8x5/16 GALVIZED STEEL SQUARE TUBE POST (SEE SN-4.02 FOR QUANTITY)	2.3		56											1																
SN-2.78	1806	OM-1(1) FY (18"x18") SQUARE PERFORATED TUBULAR STEEL SIGN POST AND ANCHOR BASE		2.25		1																										
SN-2.78	1807	OM-3(L) BLK/FY (12"x36") SQUARE PERFORATED TUBULAR STEEL SIGN POST AND ANCHOR BASE		3		1																										
SN-2.78	1808	GM-238 (54"x16"),OM-3(R) BLK/FY(12"x36") SQUARE PERFORATED TUBULAR STEEL SIGN POST & ANCHOR BASE		9		2																										
SN-2.78	1809	C-41a (16'x9') & (12'x3'), C-41b (11'x7') INSTALL ON EX. CANTILEVER STRUCTURE	8		257																								36			
SN-2.78	1810	C-42 (13'x10') INSTALL ON NEW CANTILEVER STRUCTURE	13.25		130																											
SN-2.78	1813	C-43 (13'x10') INSTALL ON NEW CANTILEVER STRUCTURE	8.6		130																											
SUBTOTALS FOR SN-11.12			95.41	595	1 1770	28	472	42	63	722	898	1	0	2	0	7	0	0	202	37	77	0	0	0	0	51	1	32	1 100	0	0	0
			8																													

• CODE NUMBER DESCRIPTION & UNIT

CODE NO.	DESCRIPTION	UNIT	CODE NO.	DESCRIPTION	UNIT	CODE NO.	DESCRIPTION	UNIT	CODE NO.	DESCRIPTION	UNIT
1	CONCRETE FOR SIGN FOUNDATION	CY	9	REMOVE EXISTING GROUND MOUNTED SIGNS AND SUPPORTS	SF	17	OVERHEAD SIGN/LUMINAIRE "I" SUPPORT	LF	25	REMOVE EXISTING OVERHEAD SIGN STRUCTURE - BRIDGE MOUNTED	EA
2	SHEET ALUMINUM SIGNS	SF	10	REMOVE EXISTING CANTILEVER STRUCTURE AND SIGNS AND SUPPORTS	EA	18	GALVANIZED STEEL BEAMS (W6X16)	LF	26	REMOVE EXISTING BRIDGE MOUNTED SIGNS AND SUPPORTS	SF
3	EXTRUDED ALUMINUM SIGNS	SF	11	REMOVE EXISTING OVERHEAD SIGN STRUCTURE AND SIGNS AND SUPPORTS	EA	19	GALVANIZED STEEL BEAMS (W8X18)	LF	27	ADD STIFFENER ANGLE TO SIGNS	LF
4	SQUARE PERFORATED TUBULAR STEEL SIGN POST AND ANCHOR BASE	EA	12	BAND SIGN TO SIGN SUPPORT	EA	20	GALVANIZED STEEL BEAMS (W8X21)	LF	28	GALVANIZED STEEL BEAMS (W10x26)	LF
5	WOOD SIGN SUPPORTS 4 INCH X 6 INCH	LF	13	RELOCATE EXISTING GROUND MOUNTED SIGNS	SF	21	GALVANIZED STEEL BEAMS (W14X30)	LF	29	GALVANIZED STEEL BEAMS (W12x26)	LF
6	WOOD SIGN SUPPORTS 6 INCH X 6 INCH	LF	14	BREAKAWAY BASE SUPPORT SYSTEM FOR STEEL BEAMS	EA	22	GALVANIZED STEEL BEAMS (W18X35)	LF	30	GALVANIZED STEEL BEAMS (W6x15)	LF
7	WOOD SIGN SUPPORTS 6 INCH X 8 INCH	LF	15	GALVANIZED STEEL BEAMS (W6X9)	LF	23	GALVANIZED STEEL BEAMS (W18X40)	LF			
8	REMOVE SIGNS FROM EXISTING OVERHEAD STRUCTURE	SF	16	GALVANIZED STEEL BEAMS (W6X12)	LF	24	GALVANIZED STEEL BEAMS (W10X22)	LF			

WR&A
Whitman, Requardt and Associates, LLP
Engineers and Planners
801 S. Caroline Street
Baltimore, Maryland 21231
(410) 235-3450

Maryland Transportation Authority
Engineering Division

ADDENDUMS & REVISIONS

NO.	DESCRIPTION	BY	DATE
1	SHEET REVISED	NML	04/21/10
8	SHEET REVISED	NML	08/26/10

M:\3150903\NorthernRegion\195\sn1112.JFK.dgn OCTOBER 2009

UPGRADE AND REPLACE EXISTING SIGNING NORTHERN REGION
JOHN F. KENNEDY MEMORIAL HIGHWAY
THOMAS J. HATEM MEMORIAL BRIDGE

DESIGNED BY J. MOCNY DRAWN BY J.CHENG CHECKED BY N. LEARY
CONST. REVIEW BY DATE OCTOBER 2009 SCALE N.T.S.

CONTRACT NO. MA-679-000-002
DRAWING NO. SN-11.12
SHEET NO. 167 OF 169

SHEET NO.	SIGN NO.	REMARKS	CODE NUMBERS 1	2	3	4	5	6	7	8	9	10	11	12	13	14	15	16	17	18	19	20	21	22	23	24	25	26	27	28	29	30
SN-2.78	1814	GM-239(54"x16"),OM-3(R) BLK/FY(12"x36") SQUARE PERFORATED TUBULAR STEEL SIGN POST & ANCHOR BASE		9		2																										
SN-2.78	1815	C-44a (20'x9') & (12'x3'), C-44b (11'x7') INSTALL ON EX. CANTILEVER STRUCTURE			293																								42			
SN-2.78	1816	OM-3(L) BLK/FY (12"x36") SQUARE PERFORATED TUBULAR STEEL SIGN POST AND ANCHOR BASE		3		1																										
SN-2.78	1817	OM-1(1) FY (18"x18") SQUARE PERFORATED TUBULAR STEEL SIGN POST AND ANCHOR BASE		2.25		1																										
SN-2.78	1818	GM-88 E5-1(11) (7'x8') 1-W18x40 GALVANIZED STEEL BEAM	3.5		56											1									18							
SN-2.78		ITEM NOS. 8, 9 & 25								562	140.5																2					
SN-2.79	1819	R1-2 (48"x48"x48") SQUARE PERFORATED TUBULAR STEEL SIGN POST AND ANCHOR BASE		7		1																										
SN-2.79	1822	OM-1(1) FY (18"x18") SQUARE PERFORATED TUBULAR STEEL SIGN POST AND ANCHOR BASE		2.25		1																										
SN-2.79	1823	W4-1(R) BLK/FY (36"x36") SQUARE PERFORATED TUBULAR STEEL SIGN POST AND ANCHOR BASE		9		1																										
SN-2.79	1824	GM-90 E5-1(3) (5'x8') 1-W10x26 GALVANIZED STEEL BEAM	2.4		40											1														19		
SN-2.79	1828	W4-1(R) BLK/FY (36"x36") SQUARE PERFORATED TUBULAR STEEL SIGN POST AND ANCHOR BASE		9		1																										
SN-2.79	1829	W13-3 BLK/FY (36"x48") SQUARE PERFORATED TUBULAR STEEL SIGN POST AND ANCHOR BASE		12		2																										
SN-2.79	1831	R1-2 (48"x48"x48") SQUARE PERFORATED TUBULAR STEEL SIGN POST AND ANCHOR BASE		7		1																										
SN-2.79		ITEM NO.9									101.25																					
SN-2.80	1832	GM-91 (7'x8') 1-W8x40 GALVANIZED STEEL BEAMS	3.5		56											1									17							
SN-2.80		ITEM NO. 9									110																					
SN-2.81	1833	W3-2 BLK/FY (48"x48"), W4-3(1) BLK/FY (30"x30") 2-4"x6"		22.25			39																									
SN-2.81		ITEM NO. 9									44.5																					
SN-2.82	1834	W13-3 BLK/FY (36"x48") SQUARE PERFORATED TUBULAR STEEL SIGN POST AND ANCHOR BASE		12		2																										
SN-2.82	1835	OM-1(1) FY (18"x18") SQUARE PERFORATED TUBULAR STEEL SIGN POST AND ANCHOR BASE		2.25		1																										
SN-2.82	1838	R1-2 (48"x48"x48") SQUARE PERFORATED TUBULAR STEEL SIGN POST AND ANCHOR BASE		7		1																										
SN-2.82	1840	W4-1(R) BLK/FY (36"x36") SQUARE PERFORATED TUBULAR STEEL SIGN POST AND ANCHOR BASE		9		1																										
SN-2.82	1841	W4-1(R) BLK/FY (36"x36") SQUARE PERFORATED TUBULAR STEEL SIGN POST AND ANCHOR BASE		9		1																										
SN-2.82	1843	GM-93 E5-1(3) (5'x8') 1-W10x26 GALVANIZED STEEL BEAM	2.4		40											1														17.5		
SN-2.82	1844	OM-1(1) FY (18"x18") SQUARE PERFORATED TUBULAR STEEL SIGN POST AND ANCHOR BASE		2.25		1																										
SN-2.82	1846	R1-2 (48"x48"x48") SQUARE PERFORATED TUBULAR STEEL SIGN POST AND ANCHOR BASE		7		1																										
SN-2.82		ITEM NO. 9									202.75																					
SN-2.83	1847	GM-94 (7'x8') 1-W8x40 GALVANIZED STEEL BEAMS	3.5		56											1									17.5							
SN-2.83	1848	GM-249 R3-7(3)R MOD (54"x72") 1-6"x8"		27					20																							
SN-2.83		ITEM NO. 9									118.1875																					
SN-2.84	1849	R1-2 (60"x60"x60") SQUARE PERFORATED TUBULAR STEEL SIGN POST AND ANCHOR BASE		11		2																										
SN-2.84	1854	W4-1(R) BLK/FY (48"x48") SQUARE PERFORATED TUBULAR STEEL SIGN POST AND ANCHOR BASE		16		2																										
SN-2.84	1855	GM-95 MdTA-01.04 (13'x13.5') 2-W8x18 GALVANIZED STEEL BEAMS	2.8		175.5											2					40.5								12			
SN-2.84	1856	W4-1(R) BLK/FY (48"x48") SQUARE PERFORATED TUBULAR STEEL SIGN POST AND ANCHOR BASE		16		2																										
SN-2.84	1857	R1-2 (60"x60"x60"), W4-3(1) BLK/FY (30"x30") SQ. PERF. TUB. STL. SP & AB		17.25		2																										
SN-2.84	1862	C-45a (17'x12') & (12'x3'), C-45b (12'x10') & (12'x3') INSTALL ON EX. CANTILEVER STRUCTURE			396														209													
SN-2.84	1863	OM-3(R) BLK/FY (12"x36") SQUARE PERFORATED TUBULAR STEEL SIGN POST AND ANCHOR BASE		3		1																										
SN-2.84	1864	OM-3(L) BLK/FY (12"x36") SQUARE PERFORATED TUBULAR STEEL SIGN POST AND ANCHOR BASE		3		1																										
SN-2.84	1865	W13-2 BLK/FY (48"x60") 2-4"x6"		20			36							1																		
SN-2.84	1867	OM-3(R) BLK/FY (12"x36") SQUARE PERFORATED TUBULAR STEEL SIGN POST AND ANCHOR BASE		3		1																										
SN-2.84		ITEM NOS. 8 & 9								361	72																					
SN-2.85	1866	OM-3(L) BLK/FY (12"x36") SQUARE PERFORATED TUBULAR STEEL SIGN POST AND ANCHOR BASE		3		1																										
SN-2.85	1870	R2-1 (48"x60") 2-4"x6"		20			36																									
SN-2.85	1871	R2-1 (48"x60") 2-4"x6"		20			36																									
SN-2.85	1874	GM-241 M4-4MOD (30"x15"), R4-5(3) (48"x84") 1-6"x8"		31.125					22.5																							
SN-2.85	1875	GM-240 M4-4MOD (30"x15"), R4-5(3) (48"x84") 1-6"x8"		31.125					22.5																							
SN-2.85	1876	GM-118 RELOCATED SIGN (15'x12') 2-W8x21 GALVANIZED STEEL BEAMS	3												180	2						43.5							24			
SN-2.85	1877	M3-1 (30"x15"), M1-1 (36"x36"), R95-3 (24"x24") SQUARE PERFORATED TUBULAR STEEL SIGN POST & ANCHOR BASE		16.125		2																										
SN-2.85	1882	GM-130 R4-5(5) (9'x10') 2-W6x16 GALVANIZED STEEL BEAMS	2.4		90											2				38.5												
SN-2.85	1883	GM-129 R4-5(5) (9'x10') 2-W6x16 GALVANIZED STEEL BEAMS	2.4		90											2				39												
SUBTOTALS FOR SN-11.13			25.9	369	1293	33	147	0	65	923	789	0	0	1	180	13	0	0	209	78	41	44	0	0	53	0	2	0	78	37	0	0

△8

• CODE NUMBER DESCRIPTION & UNIT

CODE NO.	DESCRIPTION	UNIT	CODE NO.	DESCRIPTION	UNIT	CODE NO.	DESCRIPTION	UNIT	CODE NO.	DESCRIPTION	UNIT
1	CONCRETE FOR SIGN FOUNDATION	CY	9	REMOVE EXISTING GROUND MOUNTED SIGNS AND SUPPORTS	SF	17	OVERHEAD SIGN/LUMINAIRE "I" SUPPORT	LF	25	REMOVE EXISTING OVERHEAD SIGN STRUCTURE - BRIDGE MOUNTED	EA
2	SHEET ALUMINUM SIGNS	SF	10	REMOVE EXISTING CANTILEVER STRUCTURE AND SIGNS AND SUPPORTS	EA	18	GALVANIZED STEEL BEAMS (W6X16)	LF	26	REMOVE EXISTING BRIDGE MOUNTED SIGNS AND SUPPORTS	SF
3	EXTRUDED ALUMINUM SIGNS	SF	11	REMOVE EXISTING OVERHEAD SIGN STRUCTURE AND SIGNS AND SUPPORTS	EA	19	GALVANIZED STEEL BEAMS (W8X18)	LF	27	ADD STIFFENER ANGLE TO SIGNS	LF
4	SQUARE PERFORATED TUBULAR STEEL SIGN POST AND ANCHOR BASE	EA	12	BAND SIGN TO SIGN SUPPORT	EA	20	GALVANIZED STEEL BEAMS (W8X21)	LF	28	GALVANIZED STEEL BEAMS (W10x26)	LF
5	WOOD SIGN SUPPORTS 4 INCH X 6 INCH	LF	13	RELOCATE EXISTING GROUND MOUNTED SIGNS	SF	21	GALVANIZED STEEL BEAMS (W14X30)	LF	29	GALVANIZED STEEL BEAMS (W12x26)	LF
6	WOOD SIGN SUPPORTS 6 INCH X 6 INCH	LF	14	BREAKAWAY BASE SUPPORT SYSTEM FOR STEEL BEAMS	EA	22	GALVANIZED STEEL BEAMS (W18X35)	LF	30	GALVANIZED STEEL BEAMS (W6X15)	LF
7	WOOD SIGN SUPPORTS 6 INCH X 8 INCH	LF	15	GALVANIZED STEEL BEAMS (W6X9)	LF	23	GALVANIZED STEEL BEAMS (W18X40)	LF			
8	REMOVE SIGNS FROM EXISTING OVERHEAD STRUCTURE	SF	16	GALVANIZED STEEL BEAMS (W6X12)	LF	24	GALVANIZED STEEL BEAMS (W10X22)	LF			

DRILL HOLES

DRILL HOLES

DRILL HOLES

WR&A
Whitman, Requardt and Associates, LLP
Engineers and Planners
801 S. Caroline Street
Baltimore, Maryland 21231
(410) 235-3450

Maryland Transportation Authority
Engineering Division

ADDENDUMS & REVISIONS

NO.	DESCRIPTION	BY	DATE
△8	SHEET REVISED	NML	08/26/10

M:\3150903\NorthernRegion\195\sn1113_JFK.dgn OCTOBER 2009

UPGRADE AND REPLACE EXISTING SIGNING NORTHERN REGION
JOHN F. KENNEDY MEMORIAL HIGHWAY
THOMAS J. HATEM MEMORIAL BRIDGE

SIGNING QUANTITIES

DESIGNED BY J. MOCNY DRAWN BY J.CHENG CHECKED BY N. LEARY
CONST. REVIEW BY DATE OCTOBER 2009 SCALE N.T.S.

CONTRACT NO. MA-679-000-002
DRAWING NO. SN-11.13
SHEET NO. 168 OF 169

SHEET NO.	SIGN NO.	REMARKS	CODE NUMBERS 1	2	3	4	5	6	7	8	9	10	11	12	13	14	15	16	17	18	19	20	21	22	23	24	25	26	27	28	29	30
SN-2.85	1894	W3-5 BLK/FY (48"x48") SQUARE PERFORATED TUBULAR STEEL SIGN POST AND ANCHOR BASE		16		2																										
SN-2.85	1895	W3-5 BLK/FY (48"x48") SQUARE PERFORATED TUBULAR STEEL SIGN POST AND ANCHOR BASE		16		2																										
SN-2.85	1898	C-46a (14'x12') & (14'x3'), C-46b (11'x11') INSTALL ON NEW CANTILEVER STRUCTURE	15.9		331																											
SN-2.85	1899	R2-1 (48"x60") 2-4"x6"		20			36																									
SN-2.85	1900	R2-1 (48"x60") 2-4"x6"		20			36																									
SN-2.85	1903	GM-128 (9'x5') 2-W6x9 GALVANIZED STEEL BEAMS	2.2		45												27															
SN-2.85	1904	R4-5(7) (48"x60") 2-4"x6"		20			36																									
SN-2.85	1905	R4-5(7) (48"x60") 2-4"x6"		20			36																									
SN-2.85	1906	GM-119 RELOCATED SIGN (13'x15') 2-W14x30 GALVANIZED STEEL BEAMS	5.8												195								53									
SN-2.85	1907	GM-120 RELOCATED SIGN (13'x15') 2-W12x26 GALVANIZED STEEL BEAMS	5.4												195																52	
SN-2.85	1909	DMS#15, DMS-15a/b 2-1-3(1) (42"x24") INSTALL ON NEW OVERHEAD STRUCTURE	48.51	14										2																		
SN-2.85		ITEM NOS. 9 & 10	8								483.125	1																				
			8																													
SN-2.86	1908	C-51a (14'x12') & (14'x3'), C-51b (16'x11') INSTALL ON NEW CANTILEVER STRUCTURE	17.59		386																											
SN-2.86		ITEM NO. 10										1																				
SN-2.87	1910	GM-265 (10'x10.75') & (10'&2') 2-W10x22 GALVANIZED STEEL BEAMS	4.6		127.5																					38						
SN-2.87	1911	GM-266 (10'x10.75') & (10'&2') 2-W10x22 GALVANIZED STEEL BEAMS	4.6		127.5																					38						
SN-2.87	1912	GM-267 (9'x4') INSTALL ON EXISTING STEEL SUPPORTS			36																											
SN-2.87		ITEM NO. 9									160																					
SUBTOTALS FOR SN-11.14			104.60	126	1053	4	144	0	0	0	643	2	0	2	390	0	27	0	0	0	0	0	53	0	0	76	0	0	0	0	52	0
			8																													
			8	1																												
TOTAL QUANTITIES			1273.85	6879	1 7048	428	3563	678	724	9404	2 1526	19	1	47	2 1312	69	173	258	1 580	250	493	191	183	17	53	374	7	279	1 718	71	103	140
PROPOSED QUANTITIES			1338	7222	1 7900	449	3741	712	760	9874	2 2103	19	1	49	2 1378	72	181	271	1 659	262	518	200	192	17	55	393	7	293	1 754	74	108	147
			8		1																											

• CODE NUMBER DESCRIPTION & UNIT

CODE NO.	DESCRIPTION	UNIT	CODE NO.	DESCRIPTION	UNIT	CODE NO.	DESCRIPTION	UNIT	CODE NO.	DESCRIPTION	UNIT
1	CONCRETE FOR SIGN FOUNDATION	CY	9	REMOVE EXISTING GROUND MOUNTED SIGNS AND SUPPORTS	SF	17	OVERHEAD SIGN/LUMINAIRE "I" SUPPORT	LF	25	REMOVE EXISTING OVERHEAD SIGN STRUCTURE - BRIDGE MOUNTED	EA
2	SHEET ALUMINUM SIGNS	SF	10	REMOVE EXISTING CANTILEVER STRUCTURE AND SIGNS AND SUPPORTS	EA	18	GALVANIZED STEEL BEAMS (W6X16)	LF	26	REMOVE EXISTING BRIDGE MOUNTED SIGNS AND SUPPORTS	SF
3	EXTRUDED ALUMINUM SIGNS	SF	11	REMOVE EXISTING OVERHEAD SIGN STRUCTURE AND SIGNS AND SUPPORTS	EA	19	GALVANIZED STEEL BEAMS (W8X18)	LF	27	ADD STIFFENER ANGLE TO SIGNS	LF
4	SQUARE PERFORATED TUBULAR STEEL SIGN POST AND ANCHOR BASE	EA	12	BAND SIGN TO SIGN SUPPORT	EA	20	GALVANIZED STEEL BEAMS (W8X21)	LF	28	GALVANIZED STEEL BEAMS (W10x26)	LF
5	WOOD SIGN SUPPORTS 4 INCH X 6 INCH	LF	13	RELOCATE EXISTING GROUND MOUNTED SIGNS	SF	21	GALVANIZED STEEL BEAMS (W14X30)	LF	29	GALVANIZED STEEL BEAMS (W12x26)	LF
6	WOOD SIGN SUPPORTS 6 INCH X 6 INCH	LF	14	BREAKAWAY BASE SUPPORT SYSTEM FOR STEEL BEAMS	EA	22	GALVANIZED STEEL BEAMS (W18X35)	LF	30	GALVANIZED STEEL BEAMS (W6x15)	LF
7	WOOD SIGN SUPPORTS 6 INCH X 8 INCH	LF	15	GALVANIZED STEEL BEAMS (W6X9)	LF	23	GALVANIZED STEEL BEAMS (W18X40)	LF			
8	REMOVE SIGNS FROM EXISTING OVERHEAD STRUCTURE	SF	16	GALVANIZED STEEL BEAMS (W6X12)	LF	24	GALVANIZED STEEL BEAMS (W10X22)	LF			

WR&A
Whitman, Requardt and Associates, LLP
Engineers and Planners
801 S. Caroline Street
Baltimore, Maryland 21231
(410) 235-3450

Maryland Transportation Authority
Engineering Division

ADDENDUMS & REVISIONS

NO.	DESCRIPTION	BY	DATE
1	SHEET REVISED	NML	04/21/10
2	SHEET REVISED	NML	04/30/10
3	SHEET REVISED	NML	8/13/10
8	SHEET REVISED	NML	8/26/10

M:\3150903\NorthernRegion\195\sn1114_JFK.dgn OCTOBER 2009

UPGRADE AND REPLACE EXISTING SIGNING NORTHERN REGION
JOHN F. KENNEDY MEMORIAL HIGHWAY
THOMAS J. HATEM MEMORIAL BRIDGE

SIGNING QUANTITIES

DESIGNED BY J. MOCNY DRAWN BY J.CHENG CHECKED BY N. LEARY
CONST. REVIEW BY DATE OCTOBER 2009 SCALE N.T.S.

CONTRACT NO. MA-679-000-002
DRAWING NO. SN-11.14
SHEET NO. 169 OF 169

DRILL HOLES
DRILL HOLES
DRILL HOLES