REVIEW OF THE MARYLAND TRANSPORTATION AUTHORITY'S BRIDGE AND TUNNEL INSPECTION PRACTICES

Final Report

Of the Bridge and Tunnel Inspection Peer Review Panel

To the Maryland Transportation Authority

June 1, 2009

Executive Summary

Background and Purpose of Panel

There is a fundamental public expectation that bridges are safe; the immense economic and mobility benefits of modern highway transportation depend on it. Public confidence in bridge safety was shaken in Maryland on August 10, 2008 when a fatal crash occurred on the Chesapeake Bay Bridge. A truck swerved to avoid an automobile, crashed into the bridge railing at an angle of about 40 degrees, knocked a section of the railing off the bridge, and then toppled over the railing into the Bay, killing its driver. This tragic event stirred public concerns about the adequacy of the railings on the Bay Bridge and whether the Maryland Transportation Authority (MdTA) was adequately inspecting its bridges and tunnels. To address these concerns, Governor Martin O'Malley called for a Panel of experts to review the underlying issues and advise the MdTA on ways to assure that its facilities receive top-quality inspection.

In September 2008 Maryland Secretary of Transportation John D. Porcari appointed a seven-member Panel of experts that met extensively between October 2008 and May 2009. It examined MdTA's overall inspection practices for bridges and tunnels as well as the particular issues surrounding the Bay Bridge railings. It reviewed MdTA procedures relative to national standards. It also investigated the potential for adopting commendable practices used by other transportation agencies across the United States. It enumerated technical steps that should be taken to assure top-quality inspection of MdTA bridges and tunnels.

The Panel did not attempt to identify causes of the August crash as it was outside the Panel's charge. Rather, the Panel explored the issues and limitations inherent in operating aging structures like the Bay Bridge.

Current MdTA Inspection Practices

MdTA conducts annual facility inspections as required by a Trust Agreement with its bondholders. It follows National Bridge Inspection Standards for bridges and applies similar practices to tunnels, for which currently there are no mandatory national standards. MdTA's compliance with National Bridge Inspection Standards is assessed periodically by the Maryland State Highway Administration (MDSHA). These reviews, the most recent of which were conducted in 1998, 2002, and 2006, confirmed that MdTA is in substantial compliance with National Bridge Inspection Standards.

Railing Design

There has been intense scrutiny of the bridge railing involved in the August crash. This has focused on possible defects in the design, construction, and inspection of the railing.

The railing in question, a type known as "Jersey barrier railing," is a shape found on many bridges and roads across the country. It is a concrete railing placed at the outside

edge of the lane or shoulder. The railing is designed so that if a vehicle runs into it at a small angle, it will deflect the vehicle back into the roadway with minimal damage. The railings on the Bay Bridge were installed in 1986 according to the design standards of the time, but design standards have changed considerably since then. Today's standards distinguish between different levels of protection, corresponding to different vehicle sizes, speeds, and angles of impact.

Even a railing that met today's standards, however, would not have necessarily restrained a truck that hit the railing at an angle as large as that involved in the August crash. Nor is there any requirement that MdTA should have upgraded the railings to meet new standards. Design standards change frequently. The normal practice of US transportation agencies is to upgrade facilities to meet new standards when major rehabilitation occurs, not each time standards are changed.

Railing Construction

Following the crash, some of the railings on the Bay Bridge were found to have internal voids and corroded reinforcing steel that reduced their strength. The voids probably trace to the initial on-site construction of the railings, specifically to the concrete being too stiff or not sufficiently vibrated to fill in the entire form when the railings were cast. MdTA has temporarily retrofitted the railings on the Bay Bridge that were similar to those at the location of the crash. These will be permanently repaired following the completion of railing design details.

Railing Inspection

Post-crash investigation also found that some of the railings on the Bay Bridge at the time of the crash were secured to the deck with bolts that had been weakened by corrosion. In addition, they found that the majority of the bolts had been reused when the railing was replaced in 1986. Neither the concrete voids nor bolt corrosion had been identified as problems during prior inspection. Several bolts with loose or missing nuts had been recorded in earlier visual inspection but this did not indicate a widespread problem and MdTA's handling of this inspection result was appropriate. Even non-destructive evaluation may not have revealed the real extent of corrosion. Similarly, the voids in the concrete were not detectable during visual inspection.

After the discovery of the corroded bolts MdTA retrofitted all similarly constructed railings on the Bay Bridge with steel bracing that has restored the railings and their connections to their original strength.

Inspection, no matter how rigorous, can never absolutely guarantee that every potential problem will be found. But such problems can be held to a minimum by using the very best methods and technology that are available for inspection.

Opportunities for Improvement to MdTA Inspection Practices

This report covers both MdTA bridges and tunnels, although there are clear differences in the depth to which this is possible. Federal law has established a set of national standards that apply to inspection of bridges, but not so for tunnels. "Best practices" in bridge inspection are well documented by the states. Many such practices have demonstrated their value in one state or another. Some offer models that MdTA might adopt. Much less is reported on tunnel-inspection practices elsewhere.

MdTA has made many improvements to its engineering practices in recent years, and to its bridge- and tunnel-inspection programs in particular. The Panel commends MdTA for the improvements it has made, is now making, and plans to make. After much discussion with MdTA staff, extensive examination of their recent bridge- and tunnel-inspection practices, and consideration of approaches being taken by other agencies, the Panel has the following findings and recommendations to offer.

Findings

1. MdTA has performed systematic inspections of all of its bridges and tunnels since its inception. These are required as part of its Trust Agreement with its bondholders as well as being necessary to insure the safety of the traveling public. MdTA's inspection methods and practices for both bridges and tunnels are similar to those of many other agencies with similar missions and responsibilities. In accordance with standard procedures the Maryland State Highway Administration reviewed MdTA's bridge-inspection program for compliance with National Bridge Inspection Standards.[1] These reviews, conducted in 1998, 2002, and 2006, found that MdTA was in substantial compliance.

2. In 2005 MdTA performed an internal review of the organization, personnel, and mission of its engineering division following reports critical of its performance.[2] In response MdTA reorganized its engineering division, hired a new chief engineer and other engineering staff and continued its examination of its engineering functions.

3. In 2006 MdTA found there were a number of commendable practices employed by other agencies that owned large bridges that, if employed by MdTA, would strengthen its inspection program. During 2007 and 2008 the MdTA required its inspection consultants to add selected personnel with more inspection experience, altered their assignments so that different teams would inspect each bridge on alternate inspection cycles, and required inspectors to be within arm's reach of elements being inspected. In 2008 it issued new contracts, employed new

[1] 23 U.S.C. 151. See US Department of Transportation, Federal Highway Administration, "National Bridge Inspection Standards", *Federal Register*, vol. 69, no. 239, pp. 74419 – 74439, December 14, 2004.
[2] See, for example, *Bay Bridge Deck Investigation: Report of the Bay Bridge Overview Team Examining Premature Deterioration of the Overlays of the William Preston Lane, Jr. Memorial Bridge to the MdTA*, January 14, 2005.

inspection consultants with national inspection experience, required improved methodological approaches and work schedules, significantly increased budgets devoted to bridge inspection, reorganized its own staff in charge of inspections, and improved follow-up actions on deficiencies found in the previous inspection cycle. While these changes are not complete, and more is needed, most of this work was initiated well before the August 10, 2008 accident.

4. In 2007 and 2008, using these more rigorous methods, MdTA found several structural deficiencies on its facilities that had not been noted earlier and has begun appropriate repairs. It also found that while it had been routinely conducting annual visual inspections of the Bay Bridge suspension cables, it is necessary to conduct an internal, in-depth inspection of the cables. There is no mandatory national standard for the frequency of such inspections, but an NCHRP project's recommendations[3] made in 2004 suggest doing such an inspection after 30 years and at intervals of 5 to 30 years thereafter, depending upon the age of the bridge and the amount of corrosion found in previous inspection. These internal suspension cable inspections of the Bay Bridge will be conducted in 2009.

5. Bridge railings are not typically designed to withstand the force of a crash as severe as the one that occurred on August 10, 2008, when one section of the railing was knocked off the bridge by a large tractor trailer truck striking the railing at an angle of approximately 40 degrees.

6. The railing knocked off the bridge was installed in 1986 using a design acceptable at the time, but one that would not meet today's design standards. Design standards are routinely changed, however, in many cases annually. It is neither practical nor recommended to retrofit bridges immediately to meet each such change. Rather, changes to meet later design standards are typically made to the extent possible as major bridge rehabilitation occurs.

7. The total length of the railing retrofitted on the eastbound Bay Bridge is about 8100 feet out of a total railing length of 42,572 feet, or roughly 20 percent of the total railing used on the eastbound bridge. Some of the steel bolts that had been used to fasten the Jersey barrier railing to the bridge deck were found to have corrosion. Although corrosion is not believed to be a significant factor in the accident, MdTA temporarily retrofitted all similarly designed railings on the bridge to strengthen them. The temporary retrofit restores the strength of the railing to the prior 1986 design standard but may influence the ability of the railing to redirect traffic as it is designed to do. MdTA plans to replace the temporary retrofit railings with appropriate permanent ones as soon as possible. The Panel agrees with this action.

8. The MdTA has no railings on its other bridges that employ the same connection detail as the railing that was used on the Bay Bridge. However, it does have

[3] National Cooperative Highway Research Program, *Guidelines for Inspection and Strength Evaluation of Suspension Bridge Parallel Wire Cables*, NCHRP Report 534, 2004.

railings built in 1986 or earlier that used the same "slip form" type of construction used on this railing. MdTA plans a special review and inspection of all such railings. The Panel agrees with this action.

9. Non-destructive evaluation techniques have been found to be effective in specific applications. These techniques are not routinely used in bridge inspection by agencies around the country except in selected situations where there are reasons to suspect problems.

10. The Panel considered the need for an additional inspection of the Bay Bridge, using a different engineering firm. However, MdTA has already implemented new practices wherein new teams of inspectors from different firms will be required to inspect the Bay Bridge on successive inspection cycles. This means that one set of new eyes has already inspected the Bay Bridge in 2008 and another set will do the inspection in 2009. These planned MdTA inspections appear adequate, and an additional inspection by yet another team appears unnecessary and redundant.

11. Despite the fact that MdTA has made a number of important improvements to its inspection program and has plans for further changes, the Panel has identified a number of commendable practices employed by similar agencies that could provide additional strength to the MdTA inspection program.

12. MdTA is in a period of expansion of its mission and responsibilities. It is playing a new and significant role in the construction of the Intercounty Connector (ICC) and the reconstruction of I-95. When completed, the ICC will be operated using tolls that vary by time of day, an innovative practice nationally and the first application of the concept in Maryland. Most of MdTA's major bridges and tunnels are aging and may require more frequent inspection and repair to keep them in safe operating condition. These and other factors will require careful planning, good management, and adequate funding.

13. Tunnel inspection, maintenance, and management practices have not been standardized to the extent that they have for bridges. National standards for tunnel inspection are currently being developed by national organizations representing owners and operators of tunnels.

14. MdTA has a number of commendable practices planned for future implementation. There is a need to develop a strategic plan for inspection improvement including milestones, resources, and timelines.

Recommendations

1. MdTA's steps to select high-quality inspection consultants for its inspection programs are important and appropriate. It should also have in-house staff sufficient to manage the program, oversee follow-up actions on inspection

findings, and actually perform some quality-assurance inspections as a check on consultant performance. It should review its staff positions to ensure that the three planned additional positions are adequate. MdTA's inventory of structures is sufficiently large to dedicate a position solely to oversight of the inspection program.

2. MdTA should insure that it obtains and maintains current knowledge on best practices by becoming a more active associate member of the American Association of State Highway and Transportation Officials (AASHTO), participating in the activities of the AASHTO Highway Subcommittee on Bridges and Structures, and encouraging its staff to keep current on relevant research and innovations. This is equally important in the tunnel area, where national standards are currently being developed.

3. To increase public confidence in its inspection programs, MdTA should strive for more transparency of its activities. This could entail steps such as establishing citizens working groups, providing more details of its inspections in accordance with appropriate security considerations, and inviting representatives of the media and the general public to accompany inspectors during actual inspections at appropriate points when safety and security permit.

4. During this period of revitalization of its inspection programs, the Authority members and its Chairman should seek ways to take full advantage of the expertise and experience of other agencies, especially MDSHA, to provide additional oversight. For example:
    a. MDSHA should continue to participate in the selection of engineering consultants used by MdTA in its inspection programs.
    b. At points where MDSHA and the Federal Highway Administration (FHWA) make comments on MdTA's inspection program during their periodic compliance reviews, MdTA should continue to work with MDSHA and FHWA to resolve the comments.

5. MdTA should implement the Panel's detailed recommendations, which are described in Chapters 4, 5, and 6, to strengthen MdTA's bridge- and tunnel-inspection program.

6. MdTA should develop and implement plans of action for its scour-critical bridges. It should conduct a baseline hydrographic survey of the Bay Bridge and other major bridges and develop scour-remediation plans for areas showing severe scour. MdTA should follow-up by monitoring any changes in the channel cross sections in accordance with AASHTO procedures.[4] Future hydrographic studies should be conducted as necessary based upon results of channel cross section assessments.

[4] AASHTO, *Manual for Bridge Evaluation*, 2008, Section 2.4.1.

7. MdTA should conduct a baseline hydrographic survey on each of its two tunnels. It should develop scour-remediation plans for areas showing severe scour, and should follow-up by monitoring any changes in the channel cross sections.[5] Future hydrographic studies should be conducted as necessary based upon results of channel cross section assessments.

8. MdTA should find and verify the load ratings on those bridges where ratings are currently missing or incomplete. MdTA should verify the operating ratings of its bridges where legal operating loads exceed the operating ratings. These bridges should be posted if the ratings so indicate.

9. MdTA should formalize and further document its inspection and asset-management procedures. For example:
    a. MdTA should define and document the requirements for special inspections and for in-depth inspections. It should set typical frequencies for each.
    b. MdTA should prepare and maintain a system-wide bridge-inspection manual.
    c. MdTA should prepare and maintain separate individual complex bridge-inspection manuals, in accord with AASHTO recommendations.[6] Similarly, it should prepare individual tunnel-inspection manuals for each of its two tunnels.
    d. MdTA should develop formal quality control and quality assurance requirements that define the roles and responsibilities of both consultants and in-house staff.
    e. MdTA should formalize its procedures for fracture-critical member inspections, and should change it terminology from "catastrophic elements" to "fracture-critical members," a more nationally accepted terminology.
    f. MdTA should use electronic inspection data collection and investigate the input templates available in existing systems and those used by other agencies rather than having inspection consultants develop their own.
    g. MdTA's list of fracture-critical and fatigue-prone members should include notes and sketches showing the location of the elements.

10. MdTA needs to insure that personnel conducting and supervising inspections are thoroughly trained and have available the information needed to maximize their effectiveness. For example:
    a. Comprehensive bridge-inspection training, as required by the NBIS, should be added to the position description of the program manager. Although the current program manager for bridge inspection at the MdTA has completed a comprehensive bridge-inspection training course, this should be a standing requirement for the position.

---

[5] The techniques recommended for bridges in AASHTO's *Manual for Bridge Evaluation*, 2008, Section 2.4.1 should be adopted for the two MdTA tunnels.
[6] AASHTO, *Manual for Bridge Evaluation*, 2008.

b. Periodic bridge-inspection refresher training should be a requirement for bridge-inspection team leaders and members as part of a quality assurance program that is required by National Bridge Inspection Standards.
c. MdTA should ensure that its consultant inspectors have an understanding of the performance history of major facilities and information on the unique features of each, providing as-built plans and special design details for their review.

11. MdTA inspection reports need further improvement. For example:
    a. Inspection reports should be written in a style that assumes they will be accessed and used by individuals who may be unfamiliar with inspection report formats and details.
    b. MdTA should continue to include more quantitative data in its inspection reports. All deficiencies noted should be quantified with regard to location, extent, and severity so as to permit comparisons between successive inspections. Description, drawing, and photographs of deficiencies should be included along with recommended repairs. Photographs should include the "item number" and the "priority" for cross reference purposes.

12. MdTA should consider the use of non-destructive evaluation techniques where appropriate, as described in the AASHTO *Manual for Bridge Evaluation*,[7] to address specific concerns identified during the course of its inspections.

13. MdTA should monitor developments related to the National Tunnel Inspection Standards and explore the usefulness of the supporting FHWA Tunnel Management System – Tunnel Inspection Manual,[8] Maintenance Manual,[9] and database software.

14. MdTA should confer with the Maryland Department of the Environment and set explicit storm-surge levels for which MdTA tunnels are protected.

15. MdTA should upgrade its asset-management system, building on the experience gained by MDSHA. It should identify and include preventative-maintenance work in its bridge- and tunnel-management systems.

16. MdTA should consider the adoption of the GASB 34 modified approach to enhance its asset management as a tool in system preservation and long-term infrastructure planning.

17. To improve its bridge and tunnel inspection, MdTA has taken and planned many steps and additional ones are recommended here. To assure that this work receives the attention and resources that it warrants, the MdTA Chairman and

[7] AASHTO, *Manual for Bridge Evaluation*, 2008.
[8] FHWA, *Highway and Rail Transit Tunnel Inspection Manual*, 2005.
[9] FHWA, *Highway and Rail Transit Tunnel Maintenance and Rehabilitation Manual*, 2005.

Authority Members should require the MdTA staff to develop a strategic plan to accomplish these tasks, including resources, milestones, and timelines.

18. To confirm that MdTA's inspection program of revitalization has reached its goals, MdTA should seek an FHWA peer review of its inspection program by 2011.

Table of Contents

Executive Summary **2**

1. Introduction **13**

2. An Overview of the Maryland Transportation Authority **14**
2.1 Introduction **14**
2.2 Bridge and Tunnel Inventory **14**
2.3 Expanded Responsibilities **17**

3. Bridge Railing Safety **18**
3.1 Introduction **18**
3.2 Bay Bridge Railing **19**
3.2.1 Recent Actions to Retrofit the Railing **21**
3.2.2 Condition of Railing on August 10, 2008 **23**

4. MdTA's Inspection Program: Historic Overview and Recent Improvements **26**
4.1 Introduction **26**
4.2 Ongoing and Planned Changes to Inspection Programs **27**
4.2.1 Number, Frequency, and Nature of MdTA Inspections **28**
4.2.2 Response to Inspection Findings **29**
4.2.3 Repairs and Remedial Actions **30**
4.2.4 QC and QA Procedures **30**
4.3 Case Studies of MdTA Bridge- and Tunnel-Inspection Reports **31**
4.3.1 Case Study: Bay Bridge **31**
4.3.2 Case Study: I-95 Bridges **35**
4.3.3 Case Study: Baltimore Harbor Tunnel **37**
4.4 Findings and Recommendations **39**

5. Evaluation of MdTA Current Inspection Program – Bridges **40**
5.1 National Bridge Inspection Standards (NBIS) **40**
5.2 Bridge-Inspection Organization **41**
5.3 Qualifications of Personnel **42**
5.4 Inspection Frequency **43**
5.5 Inspection Procedures **45**
5.5.1 Load Rating **45**
5.5.2 Bridge Files **47**
5.5.3 Fracture-Critical Member Inspection **48**
5.5.4 Underwater Member Inspection **49**
5.5.5 Scour-Critical Bridges **49**
5.5.6 Complex Bridge Inspection **51**
5.5.7 QC and QA Procedures **52**
5.5.8 Follow-up on Critical Findings **53**
5.6 Inventory **54**

5.7 Findings and Recommendations **55**

6. Evaluation of MdTA Current Inspection Program – Tunnels **56**
6.1 National Tunnel Inspection Standards (NTIS) **56**
6.2 Qualifications of Personnel **58**
6.3 Inspection Frequency **60**
6.4 Inspection Procedures **60**
6.4.1 Type and Severity of Defects **60**
6.4.2 Inspection Forms **61**
6.4.3 QC and QA Procedures **62**
6.4.4 Safety-Critical Repairs **62**
6.4.5 Load Rating and Load Permitting **62**
6.4.6 Underwater Members **62**
6.4.7 Flood Protection **63**
6.4.8 Mechanical Systems **63**
6.4.9 Electrical Systems **64**
6.4.10 Other Features **64**
6.5 Documentation **65**
6.6 Commendable MdTA Tunnel-Inspection Practices **65**
6.7 Findings and Recommendations **66**

7. Asset-Management Systems **68**
7.1 Origin of Asset-Management Systems **68**
7.2 Motivation for Bridge-Management Systems **69**
7.3 Modified Approach to Infrastructure Reporting **70**
7.4 Current Asset-Management Practices of State DOTs **71**
7.5 Recent Advances in Asset Management for Tunnels **73**
7.6 Asset Management at MDSHA **74**
7.7 Asset Management at MdTA **75**
7.8 Findings and Recommendations **76**

8. Findings and Recommendations **78**
8.1 Findings **78**
8.2 Recommendations **80**

Appendices **84**
A. Panel Charter Statement **84**
B. Panel Members Roster and Biographical Data **86**
B.1 Roster of Panel Members **86**
B.2 Biographical Data for Panel Members **87**
C. MdTA Organization and Recent Changes **90**
C.1 MdTA Management Organization **90**
C.2 Organization of MdTA Office of Engineering and Construction **91**
C.3 MdTA Organizational and Procedural Changes Since 2005 **92**
D. Acronyms **93**
E. Definitions **94**

Chapter 1: Introduction

At approximately 4:00 a.m. on Sunday, August 10, 2008 a fatal accident occurred on the eastbound William Preston Lane Jr. Memorial Bridge (also known as the Chesapeake Bay Bridge or Bay Bridge). At that time the westbound bridge was closed for repairs. Traffic in both directions had been routed onto the two-lane eastbound structure. As a driver of a tractor trailer attempted to avoid an automobile that had strayed into its lane, the truck struck the railing violently on both sides of the bridge, displaced a 10-ft section of railing, knocked another 13-ft section into the bay, and continued to slide another 100 feet before the truck toppled over the railing into the Chesapeake Bay. The truck driver was killed and others were hurt. The crash has raised a number of questions by concerned citizens about the safety of the bridge and about the adequacy of the inspection procedures of the Maryland Transportation Authority (MdTA) for the various bridges and tunnels that it manages.

Reliable inspection of the Bay Bridge and other MdTA facilities is vital to the citizens of Maryland, whose lives and livelihood depend on them. It is of utmost importance that they be operated and maintained in a safe condition. To do this, all of these bridges and tunnels require regular, systematic inspection. Further, when questions arise concerning the safety of these facilities, they need to be answered promptly, objectively, and in a manner that will inspire confidence in the traveling public. Events such as severe crashes provide an opportunity for public agencies to reexamine their practices to ensure that they are the best possible taking into consideration the appropriate use of latest available technology and best practices of other agencies with similar responsibilities.

Maryland Governor Martin O'Malley directed Transportation Secretary John D. Porcari to establish an MdTA Bridge and Tunnel Inspection Peer Review Panel to review MdTA's bridge- and tunnel-inspection practices to ensure the safety of the traveling public in the context of the August event. The Panel was asked to recommend any needed improvements and enhancements to the Secretary of the Maryland Department of Transportation (MDOT). It was asked to identify and evaluate best practices used in US bridge and tunnel programs. The Panel charter is provided in Appendix A. None of the Panel's work attempted to assign fault or determine the cause of the August 10, 2008 crash. A complete accident reconstruction was conducted by the MdTA Police, and a separate investigation addressing various aspects of the Chesapeake Bay Bridge railing, and bridge railings in general, is being conducted by the National Transportation Safety Board (NTSB). The NTSB report is expected to be completed in August 2009.

The seven-member Panel appointed by Secretary Porcari includes individuals with experience and expertise in bridge engineering and design, construction methods, building materials, finances, inspection, planning and management. (The Panel members are listed in Appendix B.) The Panel met extensively between October 2008 and May 2009. An independent consultant selected by the Panel was employed by MdTA to assist the Panel in conducting its investigation. In addition, MdTA and other state employees assisted the Panel as requested.

Chapter 2: An Overview of the Maryland Transportation Authority

2.1 Introduction

Prior to 1971 Maryland's toll facilities were managed by the Tolls Facilities Division of the State Roads Commission, which later became the Maryland Department of Transportation. In 1971 the MdTA was established by an act of the legislature that assigned it the responsibility for constructing, managing, operating, and improving Maryland's toll facilities, as well as for financing new revenue-producing transportation projects. It granted MdTA substantial independence in exercising those responsibilities. MdTA projects and services are primarily funded through tolls paid by the customers using MdTA facilities. The act allows the revenues to be pooled to support all of the facilities. The creation of MdTA also removed the toll revenues from the state's Transportation Trust Fund, thus providing MdTA with the fiduciary responsibility and flexibility required to maintain and operate its facilities.

Sole responsibility for all decision-making and policies governing the operation of the MdTA, including setting the tolls, resides with the Members of the Authority. These Members are citizens appointed by the Governor, with the advice and consent of the State Senate, and sworn in as officers of the state. The Members include representatives from the geographic regions near MdTA toll facilities; namely the Eastern Shore, Southern Maryland, the Baltimore metropolitan region, and Montgomery County, future site of the Intercounty Connector (ICC). Maryland's Secretary of Transportation chairs the MdTA Authority Members. Each Authority Member serves a three-year term, with two of the members' terms expiring each year. Members are eligible for re-appointment. (See Appendix C for the MdTA organization chart.)

2.2 Bridge and Tunnel Inventory

MdTA has 254 bridges and 2 tunnels in its inventory. It is responsible for 12 million square feet of bridge deck, which is 43 percent of the bridge deck area in all of Maryland.

The MdTA's Trust Agreement mandates that "it will cause independent engineers or engineering firms or corporations having a nationwide and favorable reputation for skill and experience in such work to make an inspection of the Transportation Facilities Projects periodically in accordance with industry standards (but at least annually), to submit to the Authority a report or reports setting forth their findings as to whether the Transportation Facilities Projects have been maintained in good repair, working order and condition."

The Federal Highway Administration (FHWA) requires each state department of transportation (DOT) to provide an annual inventory of all highway bridges located on all public roads in the state, including information about their condition, regardless of whether the state or some other party owns the bridge. MdTA reports on the condition of

its bridges to the Maryland State Highway Administration (MDSHA), which reports to the FHWA on the condition of all Maryland bridges.

MdTA's major highway facilities are listed below in the chronological order of their opening.

2.2.1 Thomas J. Hatem Memorial Bridge (US 40)
Opened in August 1940, the Hatem Bridge spans the Susquehanna River on US 40 between Havre de Grace and Perryville in northeast Maryland. The oldest of MdTA's facilities, this four-lane bridge has a total length is 7,749 feet and a roadway width of 48 feet. Its steel truss arch main span is flanked by deck truss approach spans. More than 11.2 million vehicles crossed this bridge in 2007.

2.2.2 Governor Harry W. Nice Memorial Bridge (US 301)
Opened in December 1940, the Nice Bridge is located on US 301 and extends 1.7 miles across the Potomac River from Newburg, Maryland to Dahlgren, Virginia. Like many older bridges, this bridge is narrow, with one 11-foot lane in each direction. It also has a steep grade. The superstructure is composed of continuous steel deck trusses with a through truss main span, all supported on steel bents. Approximately 6.8 million vehicles crossed this bridge in 2007. An improvement project is in the planning stage.

2.2.3 William Preston Lane Jr. Memorial (Bay) Bridge (US 50/301)
This 4.3-mile bridge crosses the Chesapeake Bay as US 50/301 and provides a direct connection between recreational and ocean regions located on Maryland's Eastern Shore and the metropolitan areas of Baltimore, Annapolis, and Washington, DC. It consists of two parallel structures: a two-lane eastbound bridge, opened in 1952, and a similar three-lane westbound bridge, opened in 1973. Each contains a wide variety of structural systems. Main spans include 3,200-foot suspension spans over the west shipping channel and through-truss cantilever spans over the eastern channel. These spans are followed by deck trusses followed by steel plate girder spans and concrete beams on the short spans at the ends of the bridges. Approximately 27 million vehicles crossed the Bay Bridge in 2007.

2.2.4 Baltimore Harbor Tunnel (I-895)
When opened in 1957 the 1.4-mile, four-lane Harbor Tunnel on I-895 was the longest open-trench tunnel in the world. Part of a 17-mile system of approach roadways and ramps, the facility connects major north/south highways and many arterial routes in Baltimore City's industrial sections. The twin tubes each carry two lanes on a 22-foot wide roadway and are 7,650 feet long. The tunnel carries more than 26.3 million vehicles annually.

2.2.5 John F. Kennedy Memorial Highway (I-95)
The John F. Kennedy Memorial Highway, originally designed and built in the early 1960s by the State Roads Commission, is a 50-mile section of I-95 from the I-95/I-895(N) Interchange to the Delaware state line. It carries 29.6 million vehicles annually. Many bridges are located on the roadway and interchanges on this segment of I-95. This

major toll highway is currently undergoing expansion and reconstruction. It represents a major increase in the responsibilities of the MdTA, as it is the agency's first involvement in construction of one of its facilities.

2.2.6 Francis Scott Key Bridge (I-695)
This outer crossing of the Baltimore harbor opened in March 1977 as the final link in I-695 (the Baltimore Beltway). This four-lane bridge is 1.6 miles long. Its main span is a 1,200-foot steel-truss arch. The truss extends as a through truss to carry the two adjacent side spans. Other approach spans have plate girder superstructures. Approximately 12.8 million vehicles crossed the Key Bridge in 2007.

2.2.7 Fort McHenry Tunnel (I-95)
Opened in 1985, the Fort McHenry Tunnel on I-95 is the world's widest underwater vehicular tunnel. It connects the Locust Point and Canton areas of Baltimore, crossing under the Patapsco River just south of historic Fort McHenry. Built to Interstate highway standards, its four tubes carry eight lanes of traffic on roadways that span 26 feet from curb to curb. The overall tunnel project is 8,800 feet long, with the tunnel stretching 7,200 feet from portal to portal. The sunken tube portion is 5,400 feet long. It was constructed using the immersed tube method in which the prefabricated tubes were sunk into a trench dredged in the harbor bottom, generating 3.5 million cubic yards of spoil material. The spoil was transported to a nearby disposal site and used to build MdTA's Seagirt Marine Terminal. More than 44.8 million vehicles traveled through the Fort McHenry Tunnel in 2007.

2.2.8 Seagirt Marine Terminal
Opened in 1990, the Seagirt Marine Terminal was built on the Canton/Seagirt disposal site, a 146-acre area designated as the depository for the 3.5 million cubic yards of spoil from the Fort McHenry Tunnel construction. The 275-acre container terminal features the latest in cargo-handling equipment and systems. MdTA is responsible for the inventory, inspection, and assessment of the Seagirt Marine Terminal, which is operated by the Maryland Port Administration.

2.2.9 ICC
Currently under construction, the $2.4 billion ICC will link existing and proposed development areas between the I-370 and I-95/US 1 corridors within central and eastern Montgomery County and northwestern Prince Georges County. The ICC will be a state-of-the-art, multimodal, 18-mile east-west limited-access highway. Funding of this major project comes from several sources, including toll revenues, Grant-Anticipation Revenue Vehicles (GARVEE) bonds, the MDOT Transportation Trust Fund, and state general funds. MDSHA is serving as the project manager for engineering and construction, and MdTA has project managers on site and responsibility for certain phases of the construction. The ICC will become an MdTA facility when it is completed. It will be the only highway facility in Maryland with variable pricing.

2.3 Expanded Responsibilities

As the owner and operator of Maryland's toll facilities, MdTA is responsible for some the largest and most heavily used transportation facilities in the state. It is currently experiencing a major expansion of both the scope and scale of its construction activities by virtue of roles in building the ICC and reconstructing I-95. When completed, the operation of the ICC and a portion of I-95 will involve the implementation of tolls that vary by time of day, a significant innovation and a first for Maryland.

Meanwhile many of MdTA's larger facilities were built decades ago, and some are more than 50 years old. As facilities age, they usually require more intense inspections and more repairs. MdTA is organized to oversee these activities and employs professional engineers and other skilled staff dedicated to insuring that quality inspections and repairs are completed on a timely basis. It is evident, however, that MdTA's responsibility for the construction, oversight, inspection, finance, operation, and maintenance of its expanding and aging facilities must increase to meet the demands of the traveling public. The resources needed to do this, both funding and personnel, need to be anticipated and planned.

Chapter 3: Bridge Railing Safety

3.1 Introduction

This chapter briefly discusses the August 10 accident and the safety of bridge railings in the context of that crash. The purpose of discussing the August 10 crash in this report is to explain the issues and limitations inherent in operating an aging structure and to look for places where MdTA might enhance its inspection methods so as to maintain public safety. Improved inspection methods are the focus of the remaining chapters in this report.

The Bay Bridge is two separate, parallel, and independent structures. One, completed in 1952, carries two lanes of traffic, normally eastbound. The other, completed in 1973, normally carries three lanes of westbound traffic. The crash occurred on the older eastbound bridge at a point about one mile from the eastern end of the bridge. References to the Bay Bridge throughout the rest of this chapter refer to this eastbound bridge.

During the night hours of August 10, 2008 the eastbound bridge was carrying two-way traffic. This was necessary to permit the newer three-lane bridge to be closed for construction of a new deck. About 4 a.m., an eastbound sports sedan drifted across the centerline into oncoming traffic and sideswiped a loaded westbound 18-wheel semi trailer truck. The truck struck the railing along the north side, swerved across the eastbound lane, striking the railing along the south side of the bridge at an angle of approximately 40 degrees. The impact displaced a 10-ft section of railing and knocked a 13-ft section into the bay. The truck then slid a distance approximately 100 feet along undamaged railing before rolling over the railing into the bay.

While it might seem that bridge railings would be designed to contain all vehicles that typically use the bridge regardless of size, weight, vehicle speed, or angle of impact, practicalities limit the attainment of such an ideal. For example, as speeds and angles of impact increase, the impact forces may become so great that it is impossible to contain a vehicle without serious injury to occupants and damage to the vehicle. Also, as the size and weight of a vehicle increase, the size and strength of the railing must also increase. Building such a railing at all points along a major bridge would require larger bridge members and increase the structure's own weight. A stronger railing is not typically designed for bridges similar to the Bay Bridge and design standards do not require the use of such a railing except in selected situations, for example, when a bridge has a tight horizontal curve or when protection is needed below the bridge. The elimination of all possible risk of injury is not possible in bridge design.

Engineers must design projects so that they meet minimum standards, and also so that they are both safe and economical. For example, wide shoulders are an important safety feature of most modern roads that carry high traffic volumes. Such shoulders provide disabled vehicles with a place to retreat from main traffic lanes until tow trucks can be summoned. They may also allow a distracted driver to veer off the roadway onto the

shoulder and then recover without adverse effect. Despite these advantages, on some very costly new projects such as a major bridge or tunnel, shoulders are narrowed and sometimes eliminated entirely because including them could make the entire project cost-prohibitive.

Over the years highway vehicles have become heavier, larger, and faster. Design standards have concurrently been enhanced for new highway and bridge projects. Wider lanes, broad medians, wider shoulders, stronger railings, better lighting, better safety signs, and better markings are often included in such enhancements. Some of the improved features needed to meet revised standards can be retrofitted onto older bridges as time and funds permit, but some features can never be fully incorporated on older bridges until such time as the bridges are totally replaced. State and federal policies do not require existing bridges to be retrofitted to comply with code updates, except when significant bridge reconstruction is planned. Also, resource considerations do not permit immediate rebuilding of existing facilities to meet new standards every time standards are revised. Many existing features remain in place even if they do not meet the latest design standards. This practice is typical across the nation for existing bridges, tunnels, and highways.

The Bay Bridge was designed and built for vehicles and traffic loads in use over half a century ago. Its continued safe use for today's traffic requires upgrades where practical and also necessarily requires ever-increasing inspection and repair. These special maintenance demands will continue to increase as traffic loads and volumes grow until the existing facility is replaced by a new bridge.

3.2 Bay Bridge Railing

As part of a rehabilitation of the bridge in 1986, the then-existing railings on the Bay Bridge were replaced with a new type often identified as a Jersey barrier railing. The initial development of Jersey barrier railings took place during the 1970s and since that time were widely adopted. Currently they can be found on many roads throughout the nation. A Jersey barrier railing is designed with a curved face that has been found effective in deflecting vehicles back onto the roadway with a minimum of damage, so long as the railings are struck at a small angle. Because bridge traffic moves in the narrow constrained space between the railings on each side, vehicle crashes there normally involve at a small angle of impact, and railings are designed accordingly. A small angle -- up to 25 degrees -- is generally considered sufficient to address most likely conditions. Since the Bay Bridge has no shoulders, drivers have little leeway to veer from travel lanes; any collisions with the bridge railings are likely to be at small angles. Installation of the Jersey barrier railing permits drivers a chance to recover from many crashes with the railing without significant injury to occupants or damage to the vehicle.

Some of the Jersey barrier railing sections installed on the Bay Bridge in 1986 were fastened to the deck using two "U" bolts, 7/8 inches in diameter, encased in the concrete of the railing and spaced at intervals of approximately six feet. These bolts penetrated the deck and were held in place by large nuts underneath the deck. This method of

attachment had been previously used for the railings installed in a 1973 rehabilitation of the Bay Bridge. The railings themselves were cast in place with concrete using a "slip form" method.

Design of the Jersey barrier railing installed on the Bay Bridge occurred over 20 years ago. At that time full-scale crash testing of railings was not required and not generally done.[10] Designers relied on precedent, the design standards then in place, and their judgment to design a bridge railing appropriate for a given site. The relevant design standards came from the American Association of State Highway and Transportation Officials (AASHTO).[11] They called for the application of a 10,000-pound, horizontal static load at key locations on the railing.[12] Since that time standards have increasingly relied on crash testing rather than static-load design criteria. New railing shapes have been crash tested using the Jersey shape but of varying strengths as required to contain vehicles across a range of sizes and weights.

Currently the FHWA requires that all new railing designs employed on the National Highway System must be crash tested against standardized test loads. The standard crash test levels vary depending on the size, number, and weight of vehicles anticipated in the traffic stream. Table 3-1 shows standard strength-of-railing levels for various vehicle weights, speeds, and impact angles. For example, Test Level 3 (TL-3) is for a 4,500-pound pickup truck traveling at 60 miles per hour hitting the railing at angles up to 25 degrees. A railing strong enough to handle such a load would be sufficient to contain most passenger cars at the specified speeds and impact angles. It may also contain heavier vehicles but only if they ran into the railing at lower speeds and/or impact angles. The table also shows crash test levels for stronger railings designed to handle larger vehicles. For example, a railing strong enough to handle the TL-5 test load would be expected to contain an 80,000-pound truck with van trailer running into the railing at 15 degrees at 50 miles per hour. Most new construction is now being designed to at least the TL-4 standard, which can contain an 18,000-pound single-unit truck or school bus. FHWA now requires that all replacement railings on the National Highway System be capable of meeting at least the TL-3 test loads.

---

[10] Guidance on crash testing of Jersey barrier railings has evolved through a series of reports since crash testing of them was first discussed in Highway Research Board (HRB) Circular 482 in 1962. Further advances were introduced in HRB Circular 153 in 1974, HRB Circular 191 in 1978, NCHRP Report 230, *Recommended Procedures for the Safety Performance Evaluation of Highway Safety Appurtenances*, 1980; and NCHRP Report 350, *Recommended Procedures for the Safety Performance Evaluation of Highway Features*, 1993.

[11] AASHTO, *Standard Specifications for Highway Bridges*. The Final Edition (17th) of the standard specification was published in 2002. The current bridge specification is the *AASHTO Load and Resistance Factor Design (LRFD) Bridge Design Specifications*, 4th Edition, 2008. The LRFD specifications are updated yearly by the AASHTO Highway Subcommittee on Bridges and Structures to reflect changes in technology and practice. Interims are published between editions to record these changes.

[12] AASHTO, Highway Subcommittee on Bridges and Structures, "A Discussion with Technical Committee (T-7) for Guardrail and Bridge Rail", May 14, 1996. The prevailing standards for bridge railings in 1986 were those in the AASHTO Standard Specifications, cited above.

Table 3.1 Strength-of-Railing Crash Tests Currently Required by FHWA[13]

Test Level	Vehicle	Speed	Angle of Impact
TL-1	4,500-lb. pickup truck	30 miles per hour	25 degrees
TL-2	4,500-lb. pickup truck	45 miles per hour	25 degrees
TL-3	4,500-lb. pickup truck	60 miles per hour	25 degrees
TL-4	18,000-lb. single-unit truck or school bus	50 miles per hour	15 degrees
TL-5	80,000-lb. truck with van trailer	50 miles per hour	15 degrees
TL-6	80,000-lb. truck with tank trailer	50 miles per hour	15 degrees

These standard crash tests and FHWA requirements were not in place until after the Bay Bridge Jersey barrier railing was designed. It is, therefore, not possible to know precisely how the Bay Bridge railing would respond to these loads. While the existing railing would not meet current standards for new projects, it is not possible or realistic, as noted earlier, to upgrade all existing roads and bridges to new standards immediately whenever such new standards are developed. Newer standards can be applied when major rehabilitation of older structures is undertaken or when new replacement structures are constructed. The Jersey barrier railing met the design standards when it was put in place in 1986.[14]

The August 10, 2008 crash involved an 18-wheel semi-trailer truck reportedly loaded with 27,000 pounds of cargo. The skid marks suggest that it struck the railing at an angle approximating 40 degrees. Its speed cannot be known with precision, but if traveling at the speed limit of 40 mph at the time of impact, it is reasonable to assume that since the railing was not designed to handle such a crash, as typical of most similar bridges, it would not be expected to withstand a heavy truck at that speed and impact angle.

3.2.1 Recent Actions to Retrofit the Railing

Since the August 10 crash, repairs and improvements have been made to the railing, considerably strengthening it. These include bolting steel guardrails on the face of the railing and bolting steel “L” braces at close intervals, thus strengthening the connections between the railing and the deck. The guardrails provide longitudinal continuity along the railing and the “L” braces provide additional connection-to-deck strength. (Figure 3.1) The total length of the railing to be retrofitted on the Bay Bridge is about 8,100 feet out of a total railing length of 42,572 feet, or roughly 20 percent of the total railing used on the bridge.

[13] Current AASHTO Load and Resistance Factor Design (LRFD) Bridge Design Specifications.
[14] Letter from Ammann and Whitney to Geoffrey Kolberg, Chief Engineer, MdTA, dated January 26, 2009.

Figure 3.1 Retrofits Installed in 2008 on Bay Bridge Jersey Barrier Railing

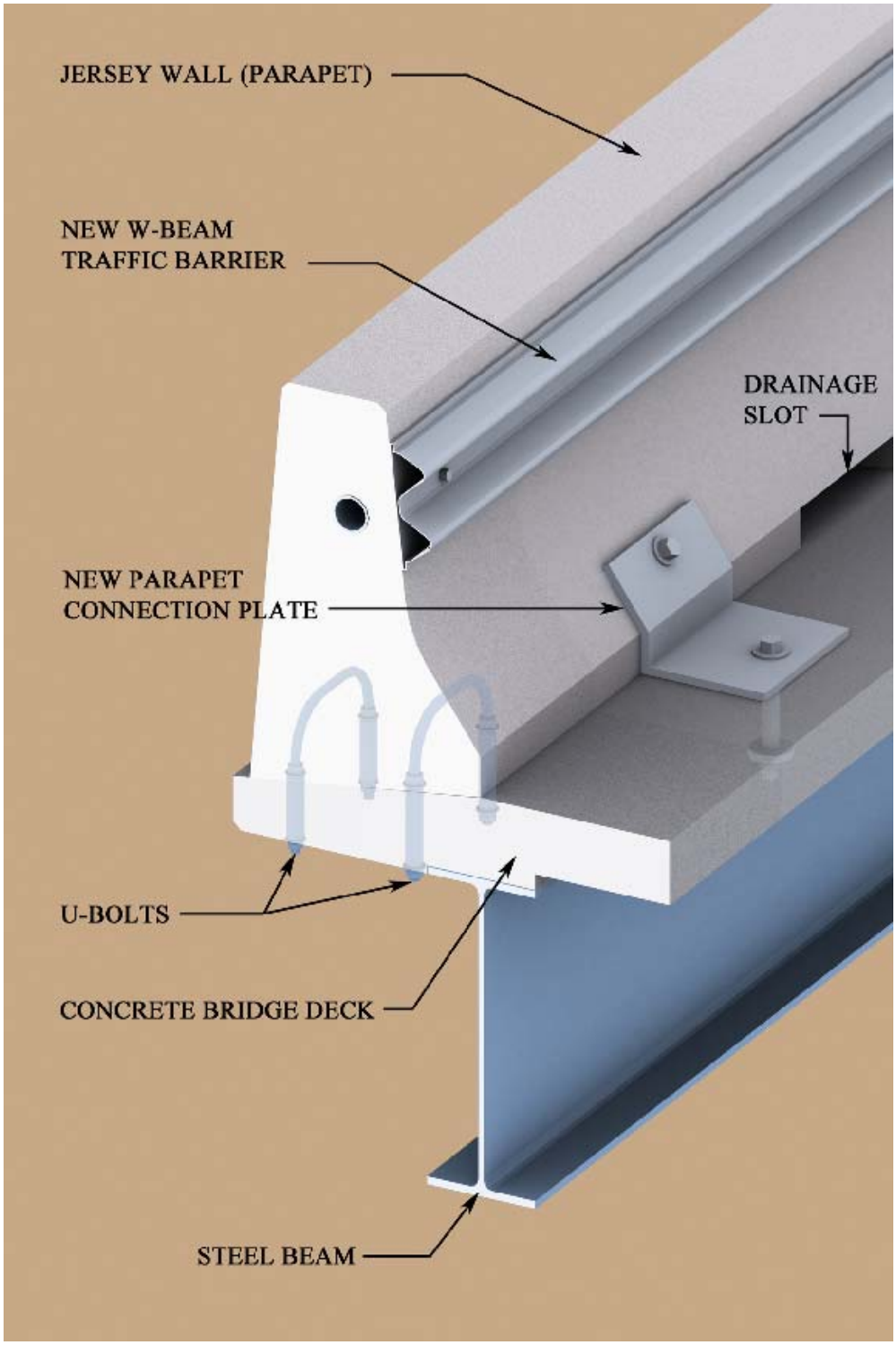

These changes have strengthened the railings such that they are stronger than when originally constructed. They meet the equivalent of the TL-2 Standard as a minimum.[15]

3.2.2 Condition of Railing on August 10, 2008

The 13-foot section of Jersey barrier railing knocked into the bay on August 10 was recovered by MdTA and the Panel had the opportunity to conduct a visual inspection of its current condition. This inspection revealed two possible problems: voids in the Jersey barrier railing, and corrosion and embedment length of the steel bolts that connected the railing to the deck.

With respect to the first problem, voids are small areas where the concrete did not fully fill the volume in the Jersey barrier railing, creating a path for water to infiltrate. These voids were likely created when the railing was originally constructed. Since voids are in the interior of the railing they cannot be detected by visual inspection. In this case they were revealed when the impact displaced the two railing sections.

With respect to the second problem, the corroded bolts had weakened the connection between the railing and the deck to which it was attached. As noted earlier, the railing was not designed to withstand a heavy truck at normal speeds hitting it at a 40 degree angle, and thus the corrosion is not believed to be a significant factor in this crash. Nevertheless the corrosion is of concern since it had not been detected until exposed after the crash. MdTA inspectors had not found this corrosion previously nor would close visual inspection by a qualified inspector have revealed it since the bolts cannot be seen at the interface between the railing and the deck.

In the period following the August 10 crash, MdTA has both strengthened the railings themselves and how they are attached to the bridge. These improvements come from using the bolted guardrails and “L” braces as previously described. These recent improvements mitigate the safety problems posed by the concrete voids and bolt corrosion but may influence the ability of the railing to redirect traffic as it is designed to do. MdTA plans to replace the temporary retrofitted railing as soon as possible.

The Panel examined a summary of the inspection reports for the Bay Bridge for the several years prior to August 10, 2008 to determine whether inspectors had seen other warning signs of these problems. The 2006 inspection report identified 18 bolts with loose or missing nuts; the 2007 report identified 23 such bolts. Since there are 5,376 of these bolts in the beam spans, the number found loose or missing represents a small percentage of the total. In both years, the priority attached to this condition was either 3 or 4 on a priority rating scale of 1 to 5, ratings that did not signal serious concern. In any case, loose or missing nuts do not necessarily indicate problems with concrete voids or bolt corrosion.

[15] Letters Ammann and Whitney to Geoff Kolberg, Chief Engineer, MdTA, dated January 21, 2009 and January 26, 2009.

Non-destructive evaluation (NDE) techniques using ground-penetrating radar have been shown to have the capability to identify concrete voids in many situations, but these technologies are not routinely used in bridge inspection. The approach of the MdTA, like that of most other agencies around the country, is to apply NDE technologies only in selected situations where there are reasons to suspect problems. Members of the Panel were briefed on the latest NDE methods by a specialist in NDE methods employed by FHWA's Turner-Fairbank Highway Research Center.[16] They are not aware of any NDE technology that would have reliably detected corrosion of the connecting bolts. The best that current NDE methods could do is to identify deterioration that had advanced to the point where there was a total loss of section, that is, where the bolt had completely severed. Weakening of the bolts due to less extensive corrosion may not be detected.

Construction practices have improved since the Jersey barrier railings on the Bay Bridge were built over 20 years ago. More recent railings use concrete additives that permit the fresh concrete to flow more easily into tight spaces. In addition, modern methods require that the fresh concrete be vibrated to reduce the potential for voids. Methods of connecting the railing to the deck have also improved. The Panel is not aware of any concerns raised in other parts of the country related to failure of Jersey barrier railings.

For all these reasons, the Panel believes that the more recently constructed Jersey railings on MdTA facilities are sound. If they are regularly inspected and maintained according to recommendations in this report they should continue to provide safe service.

MdTA informed the Panel that there are no railings on their other structures that are attached using bolts in the same way these are used on the Bay Bridge. The Panel understands that MdTA will devote special attention to Jersey barrier railings on all its other bridges. Those constructed more than 20 years ago using slip-form construction will be examined to determine whether additional inspections may be required. The Panel agrees that this is a prudent precaution.

The Panel also considered whether, in light of the foregoing, a special inspection of the Bay Bridge might be appropriate. However, as will be reported in Section 4.2.1, MdTA has already implemented new practices wherein new teams of inspectors from different firms will be required to inspect the Bay Bridge on successive inspection cycles. This means that one set of new eyes has already inspected the Bay Bridge in 2008 and another set will do the inspection in 2009. Therefore, the planned MdTA inspections appear adequate, and a special (additional) inspection by yet another team appears unnecessary and redundant.

Inspections of existing structures, no matter how rigorous, can never absolutely guarantee that every potential problem will be found. But it is vital that the very best methods and technology be employed to reduce problems to a reasonable minimum. History shows that such practices can produce structures in which the public can have confidence. Subsequent chapters will examine commendable practices in use elsewhere and compare

[16] Panel member Shay Burrows briefed the Panel on NDE using a presentation developed by Frank Jalinoos at FHWA's Turner-Fairbank Highway Research Center.

them to those used by MdTA as a basis for identifying ways to improve MdTA's inspection practices.

Chapter 4: MdTA's Inspection Program: Historic Overview and Recent Improvements

4.1 Introduction

MdTA has conducted regular systematic inspection programs of its bridges and tunnels for decades. These are needed to insure the safety of facilities used by the public. They are required as part of MdTA's Trust Agreement with its bondholders. They are necessary to comply with federal bridge-inspection standards.

MdTA's inspection methods and practices are similar to those of many other agencies with similar missions and responsibilities. In 1998, 2002, and 2006, MDSHA reviewed MdTA's bridge-inspection program to determine whether it was in compliance with National Bridge Inspection Standards (NBIS). It found that MdTA was in substantial compliance with NBIS standards.

MdTA's bridge- and tunnel-inspection program is currently undergoing a major overhaul including changes in personnel, organization, methods, contracts, funding, and oversight. The changes that are in progress predate the August 10, 2008 Bay Bridge crash. The reorganization of the entire engineering department of MdTA was triggered by two 2005 reports suggesting the need for such changes in the organization. A new chief engineer was employed in March 2005 and around that time a reassessment of all aspects of MdTA's engineering program was conducted. This included an overhaul of its bridge- and tunnel-inspection programs. Many of the changes made in the engineering reorganization go well beyond the scope of the inspection program, but they nevertheless are clearly related to it. A summary of changes made to date are shown in Appendix C.

During 2007 and 2008 MdTA began to require its inspection consultants to add selected personnel with more inspection experience, to alter assignments so that different teams would inspect each bridge on alternate inspection cycles, and to require inspectors to be within arm's reach of elements being inspected. In 2008 it revamped its inspection contracts and employed new inspection consultants with national inspection experience, required improved methodological approaches and work schedules, significantly increased budgets devoted to bridge inspection, reorganized its own staff in charge of inspection, and improved follow-up actions on deficiencies found in the previous inspection cycle. MdTA has not completed all of the changes that it has planned for its inspection programs. Many changes were initiated well before the August 10, 2008 crash, though some aspects are not fully implemented.

In 2007 and 2008, these more rigorous methods began to show results. MdTA found structural deficiencies on its facilities that had not been noted earlier and has made appropriate repairs. It also found that while it had been routinely conducting annual visual inspections of the Bay Bridge suspension cables, it was necessary to conduct an internal, in-depth inspection of the cables. There is no mandatory national standard for

the frequency of such inspections, but a National Cooperative Highway Research Program (NCHRP) project report[17] recommends conducting the first internal inspection at 30 years and subsequent internal inspections at 5- to 30-year intervals depending on the age of the bridge and the amount of corrosion found in the previous inspection. These internal, in-depth inspections will be conducted on the Bay Bridge suspension cables in 2009.

Any review of MdTA inspection procedures at this current juncture is complicated by the fact that this is a program in transition. Some MdTA changes have been completed; others are included in new contracts now in place but whose results are not yet observable. Still others are planned but not yet in place. Given the multifaceted nature of the program, it is difficult, and not always possible, to separate old practices, new practices, and improvements that are planned but not yet in place. Nor is it always possible to identify the schedule and priority attached to planned improvements.

In order to approach this difficult task, the Panel examined three different types of information:

1. A listing of all changes to inspection programs, and responses to inspection findings, prepared for the Panel by MdTA staff,
2. Responses provided by the MdTA regarding its inspection procedures for bridges and tunnels in response to detailed questionnaires prepared by the Panel, and
3. Case studies of MdTA inspection practices for three major facilities in 2006 and 2008 conducted for the Panel by members of their respective organizations.

The detailed material obtained from the questionnaires for bridges and tunnels is discussed later in this report (Chapters 5 and 6, respectively) along with observations on how MdTA practices compare with national standards, where they exist, and to the practices of other transportation agencies in the United States.

Recent and ongoing changes in MdTA practices are discussed immediately below (Section 4.2) and the three case studies are discussed after that (Section 4.3).

4.2 Ongoing and Planned Changes to MdTA Inspection Programs

The Panel asked MdTA engineering staff to provide a written description of its program, comparing how things were done in earlier years, point out where improvements have already been made, and distinguish these from improvements planned but not yet implemented. The Panel then reviewed the MdTA changes and plans in the light of practices in other areas. Noteworthy features of the MdTA inspection program that emerged from this process are discussed in Sections 4.2.1 to 4.2.4 respectively for:

1. the number, frequency, and nature of MdTA bridge and tunnel inspections,
2. how MdTA responds to inspection findings,
3. how repair and remedial action are tied to inspection, and
4. procedures used for Quality Control (QC) and Quality Assurance (QA).

[17] NCHRP, Report 534, *Guidelines for Inspection and Strength Evaluation of Suspension Bridge Parallel Wire Cables*, 2004.

4.2.1 Number, Frequency, and Nature of MdTA Inspections

Prior to the 2007 reorganization, inspections were performed every year. All of this work was done by consultants. MdTA provided most of the support equipment and staff for maintenance-of-traffic and bridge access. In addition to these annual inspections:

- Underwater inspections were performed by consultant divers every five years. The inspections consisted of visual- and walk–through- inspections above water and visual - Level I underwater inspections.
- Hands-on inspections were performed on all fracture-critical elements once every five years. The fracture-critical elements were also visually inspected annually.
- National Bridge Inventory (NBI) data were reported in accordance with federal requirements.

In its ongoing reorganization MdTA has made numerous changes to its inspection practices and procedures. Whereas only one consultant was employed to perform most of the inspections in the last 30-plus years until 2005, the number of consultants employed has been increased. Between 2005 and 2009, an additional consultant was added to the MdTA inspection program. Two 5-year contracts, each approximately $5.6 million, provided inspections from 2005 to 2009. Starting in 2008, MdTA selected three new consultant inspection teams. The three 4-year contracts, each $8 million, began in 2009. Therefore, MdTA has increased the scope and detail from one consulting contract prior to 2005, to two contracts totaling approximately $11 million from 2005 to 2009, to the three current contracts totaling $24 million from 2009 to 2012. Consultants are selected through a formal quality-based selection process in accordance with procurement requirements of the State. Their contracts are more flexible, covering inspection, design of repairs, and the ability to introduce destructive and nondestructive testing as appropriate. Inspection assignments are now adjusted annually to provide a fresh look at each facility every year. These are significant improvements. Because of the increased amount of inspection activity, far more data are being produced.

Three MdTA positions will be established to manage, maintain, track progress, review, and audit the increased volume of bridge and tunnel inspections. These in-house staff will be responsible for providing oversight and coordination of the inspections being performed by the consultants to assure timely, thorough, complete inspections and documentation of the findings. The Panel concurs with this course of action. It also recommends a review of the number of staff positions to ensure that three are adequate. The new inspection staff will report directly to the Bridge and Tunnel Manager. Formal quarterly inspection progress update reports will be submitted to the Director of Engineering and the Chief Engineer.

The new procedures appear to be producing better information about possible problems. For example, in 2007 QA reviews by MdTA staff disclosed important deficiencies not noted in earlier inspection reports submitted by the single consultant, including section losses due to severe corrosion and the presence of unreported tack welds that are potential sources of fatigue cracks.

Many of the former inspection and management practices have been revised or are in the process of being revised. Some of the improvements are listed below.

- An MdTA safety inspection manual for bridges and tunnels is being prepared.
- The intensity of the inspections has been increased. Formerly, the contract issued by MdTA required that "The Annual Inspection shall consist of a walk/climb through physical inspection resulting in a thorough visual inspection of all structures, tunnels and tunnel ventilation buildings…." Current contracts, covering four years rather than five, require that "The inspections shall consist of a walk/climb through physical inspection resulting in a thorough hands-on or visual inspection of all structures, roadways, and tunnels." A hands-on inspection is within arm's length of the component, using visual techniques that may be supplemented by nondestructive testing. The contracts stipulate that hands-on inspections, including NDE, will be required every two years with visual inspections being performed in the off years. The off year provides an opportunity to focus on the findings of the more thorough hands-on inspections. Underwater inspections will typically be performed on a four-year cycle. A five-year cycle had been used in the past for underwater inspections.
- The period between fracture-critical member (catastrophic elements) inspection has been reduced from five years to two.
- Primary resources for maintenance-of-traffic and bridge access are to be provided by the consultants performing the inspections. MdTA will provide backup resources via support equipment and staff for maintenance-of-traffic and bridge access. This allows the inspections to be more efficient and scheduling to be more reliable.

4.2.2 Response to Inspection Findings

Prior to the 2007 reorganization, there was minimal field review of inspection program findings by MdTA except when repair or remediation work was initiated. Generally, follow-up actions were routinely taken on inspection findings that were rated as high-priority items. A cursory review and assignment of non-priority findings was conducted. Non-priority findings were assigned for monitoring or to be included in on-going design contracts. There was minimal tracking of the annual findings to assure that corrective actions were accomplished. There was also minimal documented review or comparison of assigned findings versus the inspection findings of subsequent inspections. The result was that inspection documentation and follow-up started anew every year with regard to corrective actions. Generally, preventive maintenance was performed only as part of larger reactive repair contracts.

Many of the former inspection and management practices have already been revised or are now in the process of being revised. Two of these improvements are:

- While action was generally taken on priority findings in the past, there was only a cursory review and assignment of non-priority findings. All findings now receive a full review, regardless of priority. Findings are tracked using MdTA spreadsheets, and MdTA is exploring the use of an integrated bridge-management system. All deficiencies are followed up and tracked from year to year. Quarterly reviews are held

to evaluate progress, and facility administrators, construction area engineers, consultant technical experts, and external resources are involved as needed.

- The Geographic Information System (GIS)-based Document Organization System (GDOS) will be integrated with the bridge-management system. MdTA has been scanning and electronically storing contract documents since 2006. MdTA is making progress toward using Google Earth as the geographic element and linking all its records to aerial photo imagery/locations as well as word search software to facilitate electronic access to all documents.

4.2.3 Repairs and Remedial Actions

Prior to the 2007 reorganization, MdTA performed minimal monitoring of structure repair means, methods, and results. This sometimes resulted in a low success rate for repairs. There was no procedure, other than informal conversations, in which information about particular construction materials, techniques, equipment, or consultants' results were shared between inspection, management, and maintenance personnel.

As above, many of the former inspection and management practices have been revised or are in the process of being revised. Improvements include:

- Increased emphasis on preventive maintenance, and
- Plans for an increased system preservation budget and greater availability of on-call consultant resources for repairs.

Monitoring of remedial actions will also be considered along with documentation of the observed condition. All findings and the planned actions will be tracked, including the repair means and methods. Tracking will include the development of records of investigations and remediation success with regard to the corrective actions.

4.2.4 QC and QA Procedures

Prior to the 2007 reorganization, minimal tracking and effectiveness of assigned corrective actions were performed. Generally, findings from each inspection cycle were managed independently from prior years' findings. The overall program was focused on larger multi-facility contracts. Contractors adhered to formally designed plans and documents. Most of the preventive work was folded into repair projects. The overall focus of the advertised contracts was correction of deterioration with a secondary emphasis on preventive maintenance.

These former inspection and management practices have been improved as follows:

- A number of initiatives to enhance QC and QA are in the planning stages, including "audit" reviews of inspections, field construction, and construction records and formal QC and QA inspections.
- The acoustic-emission monitoring system will be reactivated on the eastbound suspension span of the Bay Bridge and a new acoustic-emission monitoring system will be installed on the westbound suspension span.

- The Primavera project management software will be adopted to manage the programs and projects within the Engineering Division.
- A staff training budget has been established, and weekly staff meetings are planned.
- A formal tunnel-inspection and management program is being planned.
- MdTA is investigating available bridge-management systems and considering the development (by a software provider) of a custom system based on a commercially available database.

4.3 Case Studies of MdTA Bridge- and Tunnel-Inspection Reports

The Panel concurrently conducted three case studies of inspection practices for MdTA bridges and tunnels to determine whether actual improvements in MdTA's inspection programs were observable. The first case study focused on the Chesapeake Bay Bridge, the second on several bridges on the I-95 John F. Kennedy Memorial Highway, and the third on the Baltimore Harbor Tunnel. In each case MdTA was asked to provide inspection reports for 2006 and 2008. These reports were then referred to inspection personnel in agencies represented on the Panel. Reports for the Chesapeake Bay Bridge were examined by an expert from the Virginia Department of Transportation. Reports for the I-95 bridges were examined by an expert within the Panel itself. Reports for the Baltimore Harbor Tunnel were reviewed by staff at the Port Authority of New York and New Jersey (PANYNJ).

In each case the experts were asked for an evaluation and comparison to national standards and practices of their respective agencies. These evaluations allow an independent assessment of actual improvements underway. Sections 4.3.1 to 4.3.3 describe this assessment for the three case studies.

The Panel is aware that many changes are underway in MdTA's inspection activities, and sees considerable evidence that MdTA has made improvements. In those cases where the Panel believed further improvements were needed it has made recommendations to that effect. In some of these cases, MdTA may have already planned such improvements, but in other cases the Panel's recommendations go beyond those planned improvements. No effort has been made to distinguish new improvements from steps already planned.

4.3.1 Case Study: Bay Bridge

4.3.1.1 *Introduction*

The program manager of the bridge safety inspection program in Virginia was asked to conduct a peer review and comparison of the bridge-inspection reports of the Bay Bridge. Documents reviewed included the bridge-inspection reports for 2006 and 2008 and the associated contract documents that governed the inspections. What follows are comments and recommendations as a result of the review.

4.3.1.2 *Documentation of Changes in MdTA Inspection Reports from 2006 to 2008*

- The major change from 2006 to 2008 is the completeness of the report. In 2006 the report for "Catastrophic Failure Elements" was separate from the annual report. The

2008 inspection report seems to include the "Catastrophic Failure Elements". However, without a listing or sketch of the elements and their location it is difficult to determine if all "Catastrophic Failure Elements" have been included.

- Because Item numbers changed from 2006 to 2008, due to the number of deficiencies detected, it is difficult to find the same deficiency from one report to the next so changes in a deficiency can be tracked. In the 2006 report previous item numbers were referenced, which added to MdTA's ability to track deficiencies. The 2008 report had no references to previous item numbers.

4.3.1.3 *Comparison of MdTA's 2008 Inspection Report with Virginia DOT's*[18] *Bridge-inspection Reports*

General

- The MdTA inspection report fails to include the date(s) of inspection and the name of the team leader(s) responsible for the inspection. This information is required by standard AASHTO procedures.[19] AASHTO procedures also require at least one team leader be at the bridge at all times during the inspection.[20] Without the name(s) of the team leader(s) it cannot be determined whether or not this was done.
- The MdTA inspection report appears to be written for those in MdTA who are responsible for the planning and scheduling of maintenance, repair and rehabilitation activities and for those within MdTA who are familiar with their format and form of documentation. Virginia reports are written assuming they may be accessed by and/or distributed to those with other needs and are unfamiliar with a specific format or form of documentation.

Quantification

- Virginia follows AASHTO recommendations that require quantification of a deficiency of an element to such an extent that a comparison can be made from one inspection to the next.[21] In addition, if a term (such as "minor", "shallow", "severe", etc.) is not defined by the *Bridge Inspector's Reference Manual*, a detailed quantification is expected.[22]
- When there are many elements that have similar deficiencies, Virginia prefers that a chart/table be used to capture the size and location of the deficiencies rather than have to read full sentences. Virginia feels this makes it easier to perform an overview of the assessment of deficiencies of an element.

---

[18] Throughout this report the abbreviation "DOT" is used for "Department of Transportation" when referring to state agencies of that name.

[19] These standard procedures are incorporated by reference in 23 CFR 650, Subpart C, See US Department of Transportation, Federal Highway Administration, "National Bridge Inspection Standards", *Federal Register*, vol. 69, no. 239, pp. 74419 – 74439, December 14, 2004. They are published in AASHTO's *Manual for Condition Evaluation of Bridges*, 2nd (Interim) Edition, 2003, section 2.2. The AASHTO *Manual for Condition Evaluation of Bridges* has recently been superseded by the AASHTO *Manual for Bridge Evaluation*, 2008.

[20] AASHTO, *Manual for Condition Evaluation of Bridges*, 2nd (Interim) Edition, 2003, section 3.4.3.

[21] AASHTO, *Manual for Condition Evaluation of Bridges*, 2nd (Interim) Edition, 2003, Sections 3.7 and 3.8.1.1.

[22] US Department of Transportation, Federal Highway Administration, *Bridge Inspector's Reference Manual*, Publication No. FHWA NHI 03-001, October, 2002 (Revised December, 2006).

Order of Report

- MdTA's 2008 report is in the order of Deck, Superstructure, and Substructure. Within each of these categories the elements are noted in the order in which they are inspected.
- Virginia does not use the order in which an element is inspected to sequence the report. Virginia's reports are also in the order of Deck, Superstructure, and Substructure. However, within each of these categories are subcategories. Only within the subcategories is there a concern for the order of inspection. This allows for an overall assessment of the condition of an element by having all comments pertaining to an element together.

Recommendations

- The MdTA report lists recommendations with each deficiency found. Virginia lists all deficiencies and then lists all recommended work in one location reserved only for recommendations. Virginia feels this gives a better overall understanding of the work required without having to read the entire report.

Catastrophic Element Inspection (Virginia refers to this as "Special Requirements")

- Virginia requires a list of all elements requiring a fracture-critical and/or fatigue-prone inspection along with a sketch showing the location of each of these elements.

Channel Profile/Soundings

- The MdTA report does not contain any documentation concerning the channel. Virginia follows AASHTO procedures and requires a channel profile or soundings be checked and reported on every report.[23]

Vertical Clearance Sheet

- The MdTA report does not contain any documentation other than the "Structure Inventory and Appraisal Sheet" as called for by AASHTO procedures[24] Virginia requires the vertical restrictions be checked at every inspection and a "Vertical Clearance Sheet" showing these restrictions be attached to every report where the bridge contains a vertical clearance restriction.

4.3.1.4 *Overall Assessment of Quality of 2008 MdTA Inspection Report Relative to Virginia DOT's Bridge-Inspection Reports (Summary Statement)*

It is difficult to compare the quality of one inspection report to the quality of inspection reports in an entire program. The quality of the 2008 MdTA inspection report is fair. Although the inspection performed by the MdTA consultant was complete and thorough, there nonetheless were several items that affect the overall quality of the report:[25]

- Names of the team leaders are not given
- lack of quantification
- typographical errors
- no detailed references to 'Catastrophic Element Inspection'
- lack of a channel profile/sounding

[23] AASHTO, *Manual for Condition Evaluation of Bridges*, 2nd (Interim) Edition, 2003, section 2.4.
[24] AASHTO, *Manual for Condition Evaluation of Bridges*, 2nd (Interim) Edition, 2003, section 2.4.1.
[25] The Panel had requested the complete reports for its review. The 2008 reports were still in draft form at that time.

4.3.1.5 *Commendable Practices for MdTA Inspection Reports*

- Placing element orientation at the top of each page that notes deficiencies helps to assure the reader of the report will know the exact location of the deficiency.
- Each deficiency receives a priority ranking. Rather than list all deficiencies in the order of their importance, this allows several deficiencies to receive the same priority.
- Changing the Catastrophic Element Inspection frequency from every five years to every two years, along with the more detailed level of inspection that has been initiated, helps to assess the importance of these items. This will also identify deficiencies at an early stage where steps can be taken to correct the deficiency.
- Changing the compliance review from every four years to every two years assures that small problems identified in the program can be corrected rather than repeated.
- Changing the "Underwater Inspection" frequency from every five years to every four years helps to identify deficiencies at an early stage where steps can be taken to correct the deficiency.

4.3.1.6 *Recommendations for MdTA Improvement*

- Provide date(s) of inspection and the names of the team leader(s) responsible for the inspection.
- MdTA has changed its formal compliance review from every four years to every two years. It is also recommended that MdTA develop a formal QC and QA program for the review of both in-house and consultant inspection reports. This should include a percentage of reviews performed in the field after the inspection as well as a percentage of reviews performed in the field during the inspection of a structure.
- In the contract and in each inspection report every element requiring a "Catastrophic Element Inspection" should be identified with a note and a sketch of their location. This will assist the consulting firm and the team leader in assuring all catastrophic elements receive the proper level of inspection.
- The report contains a "High Priority Items Report" that contains all deficiencies noted with a priority "2", "1", or "E". This report is listed numerically in order of item number which is the order in which the elements were inspected. It is recommended that all similar deficiencies be listed together to allow the reader to get a better understanding of similar deficiencies/repairs when they are taken as a whole.
- Provide a summary of required recommendations that combine all similar recommendations such as sealing joints, sealing cracks, patching delamination and spalls, etc.
- Require quantification in the inspection report that will allow a comparison from one inspection to the next to determine if there has been a change to deficiencies listed.
- Require sketches showing channel profiles/soundings and vertical clearance restrictions and that they be checked at each inspection.

4.3.2 Case Study: I-95 Bridges

4.3.2.1 *Introduction*

A Panel member with national expertise in bridge inspection reviewed and compared the bridge-inspection reports of ten MdTA bridges along the John F. Kennedy Memorial Highway (Interstate 95). Following the approach used for the Bay Bridge case study discussed above the Panel requested data from the 2006 and 2008 inspections for comparison. Not all of this material was available from the MdTA. Accordingly, as regards the bridges on I-95 the Panel's case study is less complete than that above, and in some cases had to rely on 2007 data.[26] The Panel reviewed the standard forms and element level bridge-inspection data and compared the results between the 2006 and 2007 inspections and also reviewed the priority recommendations and photos and compared the results between the 2007 and 2008 inspections. What follows are comments and recommendations as a result of the review.

4.3.2.2 *Documentation of Changes in MdTA Inspection Reports from 2007 to 2008*

Since the 2008 inspection reports had not been finalized by the time of this review, the inspection reports were not complete. They did not contain the standard forms with inventory, condition, and appraisal data nor the element level bridge-inspection data. Therefore, the older and newer inspections cannot be fully compared, although some observations are possible:

- A majority of the 2008 inspections provided more photos than were provided in the 2007 inspection. In one 2007 inspection, no photos were provided.
- The inspection teams in 2008 did a better job of using reference items such as rulers, tapes, and pens/pencils in the photos to provide scale to the defects.
- The inspection teams in 2008 did a better job of describing the observed defects by providing more quantification (length, width, depth) and location of the defects on the bridge.

4.3.2.3 *Comparison of MdTA's 2008 Inspection Reports with National Practices*

As mentioned above, the 2008 inspection reports had not been finalized by the time of this review; the inspection reports were not complete. Therefore, the newer inspections cannot be fully compared with national practices. The Panel assumed that the completed parts of the inspection report from 2007 whose counterparts have not been completed for the 2008 inspections would be similar enough to draw some conclusions. The following are specific items in which MdTA's inspection reports varied from national practices.

- The reports are missing the names of the bridge-inspection team leaders.
- The reports do not contain standard bridge-inspection photos. These include a view across the bridge deck, a view from each approach to the bridge, a view of the typical underside of the bridge, an elevation, or side, view of the bridge, and upstream and downstream views when the bridge crosses a waterway.

[26] The Panel received three sets of inspection data from MdTA for the I-95 bridges: (1) The standard forms with inventory, condition, and appraisal data items from the inspections performed in 2006 and 2007, (2) the element level bridge inspection data from the inspections performed in 2006 and 2007, and (3) the priority recommendations and photos from the inspections performed in 2007 and 2008.

- The element level inspection forms should contain written documentation when an element is placed in condition state 2 or lower. Four of the ten 2007 reports did not do this. Conversely, when the element level condition improves, a note should be provided as to what improvements were made. There was only MdTA inspection report for the I-95 bridges where the element level condition had improved, and MdTA documented this appropriately.

4.3.2.4 *Overall Assessment of Quality of 2008 MdTA Inspection Reports Relative to National Practices (Summary Statement)*

Since the 2008 inspection reports were not complete at the time of the review, it is difficult to fully compare them with national practices. MdTA inspection reports as now being prepared are not stand-alone documents. A reader cannot take one inspection report and gain a full understanding of the bridge condition. The FHWA's Bridge Inspector's Reference Manual (BIRM)[27] lists the following items are basic components of a comprehensive bridge-inspection report; table of contents, location map, bridge description and history, executive summary, inspection procedures, inspection results, load rating summary, conclusions and recommendations, and appendices to contain any back-up information that can be used to substantiate the inspector's conclusions and recommendations. MdTA's inspection reports do not contain all these items.

4.3.2.5 *Commendable Practices of MdTA Inspection Reports*

- The 2008 inspection reports provided more photos than were provided in the 2007 inspection.
- The 2008 inspection reports did a better job of using reference items such as rulers, tapes, and pens/pencils in the photos to provide scale to the defects.
- MdTA uses standardized inspection forms to collect bridge condition information.
- MdTA assigns a priority to each of its inspection findings, not just the high priority items.

4.3.2.6 *Recommendations for MdTA Improvement*

- MdTA should show the inspection frequency of its bridges at 12 months in Item 91, since annual inspections are required per the Trust agreement and MdTA should strive to meet the 12 month frequency. Although the 10 bridges were inspected both in 2006 and 2007, the time between inspections was 17 months or longer for nine of the ten reports reviewed.
- MdTA should set a schedule to review and verify the accuracy of the inventory data items that should not routinely change. On a few of the inspection reports that were reviewed, a couple inventory of items appeared to be coded incorrectly.
- MdTA should have its bridge inspectors develop an independent, comprehensive bridge-inspection report for each bridge.

[27] US Department of Transportation, Federal Highway Administration, *Bridge Inspector's Reference Manual*, Publication No. FHWA NHI 03-001, October, 2002 (Revised December, 2006).

4.3.3 Case Study: Baltimore Harbor Tunnel

4.3.3.1 *Introduction*

At the Panel's request, PANYNJ staff compared condition-survey reports for MdTA's Baltimore Harbor Tunnel with those of its own vehicular tunnels (Lincoln and Holland). PANYNJ conducts condition-survey inspections of its vehicular tunnels twice each year in accordance with its guidelines.[28] Its condition-survey reports are formatted for general distribution to the Authority's Operations and Engineering staff. MdTA's condition-survey reports, by contrast, are formatted for use by staff familiar with the inspection scope and inspector's interpretations. As an in-house document for planning purposes, the MdTA report format may satisfy its purpose. However, if the document is proposed for general distribution, the format requires further refinement so those personnel not directly involved with the inspection program will understand the results and purpose of the inspection.

4.3.3.2 *Documentation of Changes in MdTA Inspection Reports from 2006 to 2008*

Minor improvements to the MdTA report format were made from 2006 to 2008 to expand the documentation of the inspection findings. The 2008 report format has been improved to include location and photo references when photos were included.

4.3.3.3 *Comparison of MdTA's 2008 Inspection Report with PANYNJ's Tunnel-inspection Reports*

The MdTA report lacks the introductory information and summary of findings found in a PANYNJ Condition Survey Report that would allow the report to be understood by MdTA personnel or others who are not familiar with the MdTA inspection program. Specifically the report does not include the following:[29]

- Cover Letter
- Executive Summary
- Scope of Work describing the facilities included in the inspection, the in-depth level of the inspection and the methods used to complete the inspection.
- The "Priority" rating system for repair recommendations.
- A description of the methods of contracting repairs.
- A description, drawings, etc. of the facilities included in the inspection with enough information to indicate the precise locations of the noted deficiencies and recommended repairs.

4.3.3.4 *Overall Assessment of Quality of 2008 MdTA Inspection Report Relative to PANYNJ's Tunnel-Inspection Reports (Summary Statement)*

MdTA inspection reports appear to be intended for in-house use by specific personnel who are familiar with the inspection scope and the report format and interpretation. As an in-house document for planning purposes, the report format may satisfy its purpose.

---

[28] Port Authority of New York and New Jersey, *Guidelines for the Condition Survey of Tunnels*, March 2002.

[29] As noted in connection with a similar list in Section 4.3.1.4, the Panel had requested the complete reports for its review. The 2008 reports were still in draft form at that time.

Conversely, PANYNJ prepares inspection reports for general distribution to the Authority's Operations and Engineering staff. Therefore, the formats differ considerably. The MdTA report documents structural deficiencies well. However, improvements can be made in the assessment of the severity of deficiencies and the development of appropriate repair recommendations.

4.3.3.5 *Commendable Practices of MdTA Inspection Reports*
The report tables locate and describe deficiencies and then recommend the type of repair and their completion by contract or by in-house maintenance forces. The tables can then be used to track completion.

4.3.3.6 *Recommendations for MdTA Improvement*
The following specific recommendations are suggested for consideration:

- Provide dates on the report cover. The Table of Contents indicates 2006 and 2008 Reports but the report document headers indicate "Fiscal Year" 2007 and 2009 without reference to 2006 and 2008.
- Sizes should be provided for all cracks. American Concrete Institute (ACI) or FHWA references could be used.
- More information should be provided when repair recommendations are made. For example, many recommendations are for repair of cracks but the cracked material is not noted. Is it concrete, masonry, concrete encasement of steel, stone, etc.?
- Photographs should include the "item number" and the "priority" for cross-reference purposes.
- Clarify the definition of ceilings. The term "ceiling" appears to include the underside of a concrete structural building slab rather than an actual ceiling.
- There are recommendations that include monitoring during the annual inspection (Priority 5) indicating the inspection frequency has changed from biennial to annual unless there are other annual inspections not documented in the report (2007).
- The recommendation for "500. Building – Structural, No. 47.00" recommends continuous monitoring of wall movement but does not provide any measurements as a reference for the next cycle inspection to determine any change of conditions.
- In general, there are many recommendations to seal cracks in concrete (or possibly other materials) without regard for their structural significance or the practicality of sealing the cracks. Epoxy injection can only be used for "wide" or larger cracks and is not always an appropriate repair method. "Sealing cracks" by other methods is typically cosmetic and usually unnecessary in a transportation structure particularly when they are not in a location where water can enter the surface of the concrete. Often the only way to seal a crack is to replace the member, which is costly and may pose serious scheduling problems. All "crack sealing" recommendations should be reviewed with respect to their significance and deleted where repair is not warranted. A similar approach should be given to spalled concrete, particularly such items as minor spalls over shallow rebar such as "500. Building- Structural, Item 030.00".
- The building location descriptions in the "Location" column should be similar between the "500. Building- Structural" and "500. Building – Mechanical".

- It appears that monitoring is recommended for deficiencies that are not recommended for repair rather than true monitoring situations. A true need for monitoring such as "500. Building – Structural, No. 47.00" for continuous monitoring of wall movement is grouped with "600. Tunnels – Structural, No. 056.00" for monitoring of honeycombing. The honeycombing has probably been there since the tunnel was constructed and needs no monitoring. Many similar findings (hairline cracks are common) do not appear to need monitoring, but MdTA reports recommend it. The monitoring of honeycombing, fine cracks, and the like should be either deleted or another category added if it is desirable to track these findings that are not recommended for repair.

4.4 Findings and Recommendations

Based on the foregoing analysis, the Panel noted that improvements have been made and others are being introduced in MdTA's bridge- and tunnel-inspection programs. These improvements include increases in the amount of independent inspection being done following major improvements, increases in inspection budgets, reorganization of the engineering staff assigned to the inspection program, and the contracting of multiple consultants assigned so that different inspectors examine particular structures on succeeding inspection cycles. These improvements are already becoming evident: the inspection reports for 2008 are more complete than those for 2006.

There is also a need for improved quantification of issues revealed by the inspection process. For example, when a deficiency such as a crack or corrosion is noted, the extent of the problem needs to be measured to permit accurate monitoring of changes over time and the effectiveness of remedial measures.

The results of inspection need to be made accessible to non-specialists. This will help to ensure that potential problems are fully considered and that all parties involved in correcting them understand their history and context.

Numerous other specific recommendations for improvement of MdTA's bridge and tunnel inspection reports are identified in the three case studies in this chapter.

MdTA needs to pursue further improvements vigorously in many areas. Examples of such improvements include the preparation of a separate inspection manual for the Bay Bridge and for each of the other major bridges as recommended by AASHTO.[30] MdTA staff has itself enumerated many areas where improvements to its inspection process are planned. The Chairman and Authority Members of MdTA have an important responsibility to oversee this process of improvement and to ensure that the resources needed to achieve it are available. They should direct the MdTA staff to develop a strategic plan for inspection improvements, to include resources needed, milestones, and timelines.

[30] Separate manuals for major structures like these are called for in AASHTO, *Manual for Bridge Evaluation*, 1st Edition, 2008.

Chapter 5: Evaluation of MdTA Current Inspection Program – Bridges

5.1 National Bridge Inspection Standards (NBIS)

There has been a renewed nationwide emphasis on bridge inspection following the collapse of the I-35W Bridge in Minnesota in August 2007. Many highway agencies have devoted particular attention to this topic in the last year and a half. In Maryland this emphasis has been further intensified by the August 2008 crash on the Bay Bridge.

The national standards for the proper safety inspection and evaluation of all highway bridges on public roads are set out in the NBIS, covered in US regulation by 23 CFR 650, Subpart C.[31] The need for a national standard arose from the collapse of the Silver Bridge, an eyebar chain suspension bridge on U.S. Highway 35 connecting Point Pleasant, West Virginia with Kanauga, Ohio. The bridge collapsed suddenly on December 15, 1967, resulting in 46 fatalities. The incident pointed to the need for a formal program to ensure the safety of the nation's bridges. The Federal-Aid Highway Act of 1968 established the NBIS. Subsequent acts expanded the NBIS to its present form. As a result state DOTs are nearly uniform in the basic features of their bridge-inspection programs.[32]

The current NBIS has evolved in stages. The 1968 Federal-Aid Highway Act directed the states to maintain an inventory of federal-aid highway system bridges. The Federal-Aid Highway Act of 1970 applied the NBIS to bridges on the Federal-Aid Highway System. The Surface Transportation Assistance Act of 1978 extended NBIS requirements to bridges greater than 20 feet on all public roads. The Surface Transportation and Uniform Relocation Assistance Act of 1987 expanded the scope of bridge-inspection programs to include special inspection procedures for fracture-critical members and underwater inspection.

The bridges owned by MdTA must be inspected in accordance with the NBIS. A review of MdTA's bridge-inspection program conducted on September 5, 2006 determined that it was in substantial compliance with the NBIS requirements. The NBIS does not apply to MdTA's tunnels, although as the next chapter will discuss, in the absence of tunnel-specific standards MdTA has occasionally adopted NBIS approaches there as well.

The Panel reviewed MdTA's bridge-inspection program by interviewing its staff and reviewing available documents. This chapter provides a discussion of the national standards and examines MdTA's current practices. The Panel also has identified

---

[31] US Department of Transportation, Federal Highway Administration, "National Bridge Inspection Standards", *Federal Register*, vol. 69, no. 239, pp. 74419 – 74439, December 14, 2004. The NBIS regulations incorporate by reference AASHTO's *Manual for Condition Evaluation of Bridges*, 2nd Edition, also cited above. The AASHTO manual has recently been superseded by AASHTO, *Manual for Bridge Evaluation*, 2008. The Panel's starting point for its review of MdTA procedures reflects this recent development and refers to NBIS and AASHTO's 2008 Manual.

[32] NCHRP Synthesis 375, *Bridge Inspection Practices*, 2007.

commendable practices of MdTA and other agencies as well as opportunities for MdTA to improve its bridge-inspection program.

5.2 Bridge-Inspection Organization

5.2.1 National Standards and Current MdTA Practices

The NBIS requires state transportation departments to have a bridge-inspection organization that is responsible for bridge-inspection policies and procedures, QC and QA, and preparing and maintaining a bridge inventory. A qualified program manager is required to be in charge of the bridge-inspection organization.

In Maryland, MDSHA is the state transportation department that is required to meet the NBIS. However, the regulations allow MDSHA to delegate to another agency the inspection of bridges under its control. Although it may not be formalized, the MDSHA has, in essence, delegated to the MdTA the responsibility for inspection of the bridges it owns.

The current MdTA Bridge and Tunnel Manager also serves as the inspection program manager. He is qualified for this role with his education, experience, and training. He currently spends approximately 25 percent of his time on the bridge-inspection program and has five staff providing part-time services to the MdTA's bridge-inspection program. In addition to the permanent MdTA employees, he and his staff currently manage three bridge and tunnel-inspection contracts at $24 million to support the needs of the program.

MdTA has received verbal approval to add three permanent staff who will work full-time on bridge and tunnel inspection.

5.2.2 Commendable Practices and Opportunities for Improvement

- The Puerto Rico Highway and Transportation Authority and other state transportation departments have staff with roles and responsibilities focused 100 percent on bridge-inspection activities.
- PANYNJ has staffing plans that include positions dedicated exclusively to bridge inspection. This may offer a useful model for MdTA.
- **Panel recommendation:** MdTA should continue to move forward with hiring the three staff dedicated to the bridge and tunnel-inspection program.
- **Panel recommendation:** One of the new hires should be a full-time dedicated individual to oversee MdTA's bridge-inspection program.
- **Panel recommendation:** MdTA should consider the recommendations in this report as it defines the responsibilities of the new staff. It should also reassess whether the number of staff is sufficient given these responsibilities.

5.3 Qualifications of Personnel

5.3.1 National Standards and Current MdTA Practices

National standards set requirements for four typical positions: program manager, bridge-inspection team leader, load rating engineer, and underwater bridge-inspection diver.

Program Manager. The program manager can be qualified in several ways with various combinations of experience and training. The *Manual for Bridge Evaluation* states: "The inspection program manager provides overall supervision and is available to team leaders to evaluate problems. Ideally, the position requires a general understanding of all aspects of bridge engineering, including design, load rating, new construction, rehabilitation, and maintenance. Good judgment is important to determine the urgency of problems and to implement the necessary short-term remedial actions to protect the safety of the public. When appropriate, the specialized knowledge and skills of associate engineers in such fields as structural design, construction, materials, maintenance, electrical equipment, machinery, hydrodynamics, soils, or emergency repairs should be utilized." MdTA requires the program manager to be a professional engineer (PE) with at least three years managing engineering projects. In addition, although not required by MdTA, the current program manager completed a comprehensive bridge-inspection training course.

Team Leader. The bridge-inspection team leader can also be qualified in several ways with a combination of education, experience, and training. The *Manual for Bridge Evaluation* states: "The Inspection Team Leader is responsible for planning, preparing, and performing the field inspection of a bridge. There should be at least one team leader at the bridge at all times during each inspection." Inspections of MdTA facilities are performed entirely by consultants. The consultants serving as inspection team leaders are required to have a PE license and successfully completed a comprehensive bridge-inspection training course that meets the minimum requirements of the NBIS. Due to the nature of the consultant selection procedures, most of the team leaders used for bridge inspection have extensive experience performing bridge inspections.

Load-Rating Engineer. The person with the overall responsibility of load rating bridges must be a PE. The *Manual for Bridge Evaluation* states: "The engineering expertise necessary to properly evaluate a bridge varies widely with the complexity of the bridge. A multi-disciplinary approach that utilizes the specialized knowledge and skills of other engineers may be needed in special situations for inspection and office evaluation." MdTA uses a combination of consultants and in-house personnel to perform the load rating. These are required to be sealed by a PE licensed in Maryland.

Underwater Diver. Underwater bridge-inspection divers must have successfully completed a comprehensive bridge-inspection training course. They must be able to inspect underwater members to the extent necessary to allow them to determine structural safety with certainty. In addition to structure elements, underwater inspections must include the streambed. Inspections in deep water will generally require diving or other appropriate techniques to determine underwater conditions. It should be an integral part

of a total bridge-inspection plan. MdTA agrees the underwater inspection is very important and that training alone is not enough to assess the structural condition underwater. It uses consultant resources to perform this function and requires the underwater bridge-inspection diver to be a graduate civil/structural engineer from an accredited university and have five years of experience with at least 500 hours of underwater structural inspections. Further, the diver's experience must be appropriate to the water depths involved and the structural conditions to be assessed at the bridge.

5.3.2 Commendable Practices and Opportunities for Improvement

- MdTA requires consultants serving as inspection team leaders to be PEs.
- MdTA requires underwater divers to be graduate engineers who are able to assess structural conditions immediately.
- Most state transportation departments require the program manager to be a PE. At least 20 state transportation departments require two to ten years of bridge-inspection experience in addition.
- Several state transportation departments, including those in New Jersey and Arizona, require that the bridge-inspection team leader be a PE.
- **Panel recommendation:** MdTA should add periodic bridge-inspection refresher training as a requirement for the bridge-inspection team leaders and members.
- **Panel recommendation:** Although the current program manager has completed a comprehensive bridge-inspection training course, such training should be made a standing requirement for this position.

5.4 Inspection Frequency

5.4.1 National Standards and Current MdTA Practices

The NBIS sets minimum requirements for three typical types of inspection: routine, fracture-critical member, and underwater. In addition, there are two other types of inspection, referred to as special and in-depth inspections, and the bridge owner is required to determine the appropriate frequency for these inspections. All five inspection types are required for MdTA.

Routine Inspection. A routine inspection is a regularly scheduled inspection consisting of observations and/or measurements needed to determine the physical and functional condition of the bridge, to identify any changes from initial or previously recorded conditions, and to ensure that the structure continues to satisfy present service requirements. These inspections are generally conducted from the bridge deck, the ground, the water levels, and/or from permanent work platforms and walkways, if present. The NBIS requires routine inspection to be performed at intervals not to exceed 24 months. MdTA performs routine inspections annually as required by its Trust Agreement. In 2007 it enhanced its bridge-inspection practices to perform a closer, hands-on inspection every other year.

Fracture-critical Member Inspection. A fracture-critical member inspection is a hands-on inspection of fracture-critical members or member components that may include visual and other nondestructive evaluation. Starting in 2004 the NBIS required fractural-critical member inspections to be performed at intervals not to exceed 24 months. MdTA had been performing hand-on inspections for its catastrophic elements at five-year intervals. In 2007, MdTA enhanced its bridge-inspection practices and changed the hands-on requirement to a two-year frequency.

Underwater Inspection. An underwater inspection is an inspection of the underwater portion of a bridge substructure and the surrounding channel. It applies to features that cannot be inspected visually at low water by wading or probing, thus requiring diving or other appropriate techniques. Underwater inspection involves sounding to locate the channel bottom, probing to locate deterioration of substructure and to determine whether undermining has occurred, and diving to inspect visually and measure bridge components. The NBIS requires underwater inspections to be performed at intervals not to exceed 60 months. MdTA had been performing underwater inspections at five-year intervals. In 2007, MdTA enhanced its bridge-inspection practices and changed the underwater inspection requirement to a four-year frequency.

Special Inspection. A special inspection is one that is scheduled at the discretion of the bridge owner in order to monitor a particular known or suspected deficiency, such as foundation settlement or scour, a member in poor condition, or a load-posted bridge. This type of inspection can be performed by any qualified person familiar with the bridge and able to accommodate the assigned frequency of investigation. The determination of an appropriate frequency should consider the severity of the known deficiency. MdTA performs this type of inspection based on the findings of the other inspections that are performed.

In-depth Inspection. An in-depth inspection is a close-up inspection of one or more members above or below the water level. It is done to identify deficiencies that are not readily detectable using routine inspection procedures. Hands-on inspection may be a necessary part of in-depth inspection at some locations. At times, nondestructive field evaluation, other material tests, or both may need to be performed to gauge the existence or extent of any deficiencies. This type of inspection can be scheduled independently of a routine inspection, though generally at a longer interval. For large and complex structures, these inspections may be scheduled separately for defined segments of the bridge or for designated groups of elements, connections, or details that can be efficiently addressed by the same or similar inspection techniques. Each defined bridge segment, each designated group of elements, or both; connections; or details should be clearly identified as a matter of record and each should be assigned a frequency for re-inspection. To an even greater extent than is necessary for routine inspections, the activities, procedures, and findings of in-depth inspections should be completely and carefully documented. MdTA has done some in-depth inspections and is planning for others. Examples include performing ultrasonic testing of pins, unwrapping and separating the main cables of the Bay Bridge, and determining the stress levels of hangers.

5.4.2 Commendable Practices and Opportunities for Improvement

- MdTA performs routine inspection of its bridges annually.
- MdTA performs underwater inspection of its bridges on a four-year frequency.
- MdTA is planning an in-depth inspection of the main cables on the Bay Bridge.
- **Panel recommendation:** MdTA should define and document what is required for special and in-depth inspections. It should set typical frequencies for these types of inspections.
- **Panel recommendation:** MdTA should change its terminology from "catastrophic elements" to "fracture-critical members" to conform to nationally accepted terms.

5.5 Inspection Procedures

5.5.1 Load Rating

5.5.1.1 *National Standards and Current MdTA Practices*

The NBIS states each bridge is to be rated as to its safe load-carrying capacity in accordance with the AASHTO Manual and to post or restrict the bridge in accordance with the AASHTO Manual or in accordance with State law, when the bridge cannot safely carry the maximum unrestricted legal loads or state routine permit loads. AASHTO's method for calculation of bridge-load rating provides a basis for determining the safe load capacity of a bridge.[33] Load rating requires engineering judgment to compute a rating value that maintains safety and that supports effective posting and permit decisions. Bridge-load rating calculations are based on information in the bridge file including the results of a recent inspection. As part of every inspection cycle, bridge load ratings should be reviewed and updated to reflect any relevant changes in condition or the weight of the structure itself noted during the inspection.

Very heavy vehicles, as well as vehicles with certain axle spacings, can impose disproportionate wear and tear on bridge structures. The load-rating system has been developed to balance the competing needs of traffic and structural longevity. One measure, called the "inventory rating," is used to describe the heaviest load that a bridge can carry in unlimited amounts without any special wear and tear. If the inventory rating is high enough to handle all vehicles that are within the weight and configuration limits that a state sets for its highways generally, then routine traffic of all types may use the bridge without raising any special concerns. Another measure, called the "operating rating," is defined as the maximum permissible live load to which the structure may be subjected. Different vehicle types and axle spacings affect the structure differently, so a vehicle-specific operating rating may be set for each truck configuration.[34] In effect, the operating level draws a line

[33] AASHTO, *Manual for Bridge Evaluation*, 2008.

[34] Load ratings for bridges are based on "reference vehicles" with specific gross vehicle weight, axle spacing, and axle weight. Standard AASHTO reference vehicles include H-15, HS-20, 3S2, and most recently the new reference vehicle HL-93. The vehicle type T-3 is a reference vehicle used by Maryland; it

above which vehicles reduce the life of the structure. If a bridge's operating rating is less than the loads that are allowed on a state's highways, then the bridge is a weak link in the network that requires special protection. FHWA requires that bridges be "posted" in this situation, ie., that they be restricted so that only loads beneath the operating rating are routinely allowed.

Because the exact vehicle configuration affects the wear and tear that it causes to bridges, tractor trailers (vehicle configuration 3S2) may be limited to one maximum weight, for example, while dump trucks (configuration T-3) may be limited to another. To minimize the situations where there are different operating ratings for different vehicles, highway agencies also make use of a hypothetical "design" vehicle load (HS-20 configuration) that represents any of the potential wear-and-tear effects of any real truck. Thus, if the operating rating for an HS-20 vehicle is 36 tons, then a dump truck, tractor trailer, or any other legal vehicle weighting under 36 tons would be allowed.

MdTA currently uses a mix of in-house and consultant services to perform load ratings of its highway bridges. These are computed as needed for the four different vehicle configurations weighing 80,000 pounds or under – two "design" trucks (H-15 and HS-20) and two actual "legal" trucks (T-3, and 3S2). In addition, Maryland State law allows for routine permits to be issued to a certain truck configuration up to 150,000 pounds (150K) on the Interstate System only. All of the load ratings are performed by licensed PEs in Maryland. MdTA review of consultant reports for previous years shows that some bridges have been analyzed for the HS-20 truck, but that this does not always correspond to analysis for the other trucks. MdTA recently engaged a consultant to reanalyze the bridges and validate them for all four design and legal trucks. This work is scheduled for completion in June, 2009.

At the March 23-24, 2009 meeting of the Panel, MdTA staff made an in-depth presentation on the current status of load ratings for MdTA facilities. MdTA has not been able to find supporting documentation for current bridge ratings in many instances. Of a total of 254 bridges listed in the MdTA inventory, no ratings could be located for 44 structures; consultants have been assigned the task of rating these bridges. Another 31 bridges were rated for HS-20 truck and documentation of these ratings could be found, but for those same bridges, ratings for other vehicle types (H-15, T-3, 3S2, and 150K) could not be found; consultants have been given this task as well. No ratings for any of the 254 bridges could be found for 150K vehicles; consultants are working on filling this gap as well.

The ratings that have been found are not necessarily reliable. NBIS regulations require that any bridge where the maximum legal load or routine

---

corresponds to a three-axle dump truck with a gross weight of 33 tons. The designation 150 K refers to an overweight vehicle that requires special permits, namely a tractor trailer with gross vehicle weight of 150,000 pounds.

permit load exceeds that allowed under the operating rating should be posted or restricted for that truck. MdTA has eight of these but none are posted because MdTA is not confident that the operating ratings are correct. These are being investigated and possibly re-rated.

Permit requests for overweight vehicles come to the MdTA from MDSHA's Motor Carrier Division. MdTA requires the initial load ratings to be performed at the completion of final design and it plans to perform new load ratings for all its bridges in the next two years to assure they are up to date. MdTA relies primarily on the bridge inspectors to recommend when a reanalysis is needed and MdTA does not have any defined criteria when the reanalysis is warranted.

5.5.1.2 *Commendable Practices and Opportunities for Improvement*

- MdTA performs the initial load rating of its highway bridges during the design phase.
- The North Carolina DOT has documented policies and procedures in a bridge-inspection manual that includes comprehensive load rating procedures. The procedures require a review of the load rating analysis for each bridge after each inspection.
- The Illinois DOT has a registered structural engineer from its Central Bureau of Bridges and Structures perform a site inspection on bridges in poor condition. The structural engineer collects appropriate field information for use in load ratings.
- **Panel recommendation:** MdTA should find and verify the load ratings on the 44 bridges where no load ratings could be found and the 31 bridges for which ratings were missing for vehicle configurations H-15, T-3, 3S2, and 150K.
- **Panel recommendation:** Bridges should be posted when the maximum unrestricted legal load exceeds that allowed under the operating rating.[35] MdTA should verify the operating ratings for the eight bridges of this type that it owns and either correct the operating rating or post the bridges.
- **Panel recommendation:** In its planned bridge-inspection manual MdTA should set out criteria for when reanalysis of the bridge load ratings should be done to provide consistency among the bridge-inspection teams.

5.5.2 Bridge Files

5.5.2.1 *National Standards and Current MdTA Practices*

The AASHTO *Manual for Bridge Evaluation* states that a bridge owner should maintain a complete, accurate, and current record of each bridge under its jurisdiction. Complete information is vital to the effective management of

[35] AASHTO, *Manual for Bridge Evaluation*, 2008.

bridges. The information in the bridge file provides a record that may be important for repair, rehabilitation, or replacement. It should provide a full history of the structure, including details of any damage and all strengthening and repairs made to the bridge. A complete bridge file contains as-built drawings, if available, photographs and sketches, repair history, load rating and posting analyses, inspection history, inspection requirements, and data tracked on standard forms.

MdTA follows MDSHA guidance for collection of inspection data and uses standard forms for collecting approximately 135 pieces of bridge-inspection data. In addition, sketches and photos are submitted by the bridge-inspection team to clarify the inspection findings. MdTA submits the data to the MDSHA for inclusion in the NBI at the completion of each year's inspections. MdTA maintains all design plans, specifications, as-built plans, estimates, photos and inspection reports for historical documentation in the bridge file. The bridge-inspection data can be accessed by MdTA's engineering and construction staff.

5.5.2.2 *Commendable Practices and Opportunities for Improvement*

- MdTA maintains substantial historical documentation on its bridges.
- **Panel recommendation:** MdTA should review its policy and identify and document those photos or sketches that, at a minimum, should be taken at each inspection. Similarly, it should define when additional photos are required to substantiate the inspection findings.

5.5.3 Fracture-Critical Member Inspection

5.5.3.1 *National Standards and Current MdTA Practices*

MdTA refers to a fracture-critical member as a catastrophic element. The national standards require that agencies identify such members and pinpoint their location, describe their inspection frequency, describe the procedures for inspecting these members, and follow other set procedures for them. MdTA enhanced its procedures in 2007 to perform a fracture-critical member inspection of its fracture-critical bridges every 24 months. It also performs an additional routine inspection on the years in between. In addition, MdTA has performed in-depth inspection of the pins at joints using ultrasonic testing. MdTA has an outline for a comprehensive bridge-inspection manual and plans to document all the procedures formally.

5.5.3.2 *Commendable Practices and Opportunities for Improvement*

- MdTA performs an additional routine inspection of its fracture-critical members in the years between the hands-on inspections.
- The Washington state DOT has begun using phased array ultrasonic testing for detecting and quantifying crack indications in steel members on fracture-critical bridges.
- The North Carolina DOT performs ultrasonic tests on all pins, hangers, and eyebars during every cycle of inspection.

- The Oregon DOT requires a Level 1 fracture-critical inspection (a very detailed hands-on inspection) with every routine inspection and a Level 2 fracture-critical inspection at longer intervals. Level 2 inspections concentrate on finding very small cracks and may employ NDE techniques.
- **Panel recommendation:** MdTA should formalize its procedures for fracture-critical member inspection.

5.5.4 Underwater-Member Inspection

5.5.4.1 *National Standards and Current MdTA Practices*

According to national standards, agencies responsible for bridges that require underwater-member inspections should identify the location of the underwater elements, describe the inspection frequency for these inspections, describe the inspection procedures, and follow the set procedures. Underwater inspection involves sounding to locate the channel bottom, probing to locate deterioration of substructure and undermining, diving to inspect visually and measure bridge components, or some combination thereof. It should be an integral part of a total bridge-inspection plan. MdTA enhanced its procedures in 2007 to perform an underwater-member inspection of its bridges every four years when the water depths exceed three feet. In addition, it takes soundings to monitor streambed profiles. The profiles are maintained historically but not compared from one inspection to the other.

5.5.4.2 *Commendable Practices and Opportunities for Improvement*

- The North Carolina DOT performs channel cross-sections on the upstream and downstream side of each bridge over water.
- The Tennessee DOT performs stream cross-sections during each routine inspection.
- **Panel recommendation:** MdTA should formalize its procedures for underwater-member inspections.
- **Panel recommendation:** MdTA should take the sounding data and plot the streambed profiles in one file so that changes that may affect the bridge in the future can be readily monitored.

5.5.5 Scour-Critical Bridges

5.5.5.1 *National Standards and Current MdTA Practices*

As water flows rapidly around bridge piers and abutments it can erode sand or rock surrounding these parts of a structure. This erosive process, referred to as "scour," can weaken the supporting structure and cause a bridge to collapse: indeed, scour is responsible for more than half of all bridge failures in the United States. While most of these failures involve small structures, scour is recognized to be a serious concern for major structures as well, and special steps are needed to protect against it. Defense against scour damage requires regular inspection for underwater holes and changes in the riverbed surrounding piers

and abutments. When potential problems are observed bridge owners need to have plans in place to remedy them.

NBIS requires identifying scour-critical bridges, preparing a plan of action (POA) to monitor known and potential deficiencies, and monitoring the bridges that are scour-critical in accordance with the plan.[36] MdTA has seven scour-critical bridges in its inventory. Although it follows the procedures set out in the MDSHA Structure Inventory and Appraisal (SIA) for such structures, this manual does not require that any actions be planned other than monitoring. Accordingly, formal POAs for each bridge have not been developed by MdTA.

Recent developments in federal regulations do not appear to be reflected in MdTA's current approach. When the NBIS regulations were updated in December 2004, the FHWA formally required states to develop and implement a POA for each of their scour-critical bridges.[37] States vary in the degree to which this has been accomplished. State DOTs have been diligently working on developing and implementing the POAs for state-owned bridges before making sure the other agencies within the state are compliant. There are about 20,000 scour-critical bridges across the nation, of which about half are owned by state DOTs. State DOTs have developed POAs for about 83% of them and 33 states have developed POAs for all their scour-critical bridges. In January 2008, the FHWA issued a memorandum with a recommendation that scour-critical bridges under state jurisdiction have POAs developed by November 2008 and that they are implemented by April 2009.[38] The Panel believes that full compliance with the FHWA regulations in this area is appropriate.

Two important tools for monitoring scour conditions are hydrographic surveys and channel cross sections. Hydrographic surveys are the more thorough, and more costly, of the two. In essence, a hydrographic survey is a map of the underwater surface, showing irregularities and elevations. Hydrographic surveys may be used for constructing navigation charts, planning dredging operations, and other purposes. Hydrographic surveys for scour investigation are normally performed using sonar echo-sounding techniques similar in concept to the devices used by anglers to locate likely locations of fish. Multi-beam devices can be used to increase the amount of detail that is observed. Results from hydrographic surveys are useful in examining scour because they provide a comprehensive picture of the underwater terrain. When this terrain is observed to have changed in the areas surrounding bridge supports it may be a sign that scour forces are at work. The survey results allow engineers to determine the

[36] Information on scour plans of action including a standard template can be found on FHWA's website at www.fhwa.dot.gov/engineering/hydraulics/bridgehyd/poa.cfm.
[37] FHWA, "National Bridge Inspection Standards", *Federal Register*, vol. 69, no. 239, pp. 74419 – 74439, December 14, 2004.
[38] "National Bridge Inspection Standards – Scour Evaluations and Plans of Action for Scour Critical Bridges (Reply Due: February 29, 2008)", memo from King W. Gee, Associate Administrator for Infrastructure, January 4, 2008.

location, extent, and causes of scour problems, and provide useful information in designing remedies to the problems.

Channel cross sections, the second tool, are profiles of underwater terrain taken along a single profile line running parallel to the bridge and perpendicular to the channel beneath it. Channel cross sections from current and past inspections are plotted on a common plot to observe waterway instability such as scour, lateral migration, aggradation, or degradation. They do not provide as complete a picture of underwater changes as hydrographic surveys, but this less expensive technique can be useful as an indicator of underwater shifts and to signal when more extensive investigations are appropriate.

5.5.5.2 *Commendable Practices and Opportunities for Improvement*

- Some state transportation departments have developed dedicated manuals for evaluation of scour at highway bridges. These document the requirements for a plan of action, monitoring procedures, and potential countermeasures.
- Many state transportation departments are proactively applying properly designed scour countermeasures to reduce the number of scour-critical bridges in their inventories.
- **Panel recommendation:** MdTA should develop and implement plans of action for its scour-critical bridges. It should conduct a baseline hydrographic survey of the Bay Bridge and other major bridges and develop scour-remediation plans for areas showing severe scour. It should follow-up by monitoring any changes in the channel cross sections in accordance with AASHTO procedures.[39] Future hydrographic studies should be conducted as necessary based upon results of channel cross sections.

5.5.6 <u>Complex Bridge Inspection</u>

5.4.6.1 *National Standards and Current MdTA Practices*

NBIS requires that specialized inspection procedures be adopted for complex bridges and that additional inspector training and experience be required to inspect them according to those procedures. AASHTO recommends that "A separate inspection plan for each unusual or special bridge to reflect the unique characteristics of such structures should be developed."[40] The NBIS defines complex bridges as "movable, suspension, cable-stayed, and other bridges with unusual characteristics." Such bridges, including the Bay Bridge, are in MdTA's inventory. MdTA is moving forward with the development of a comprehensive bridge-inspection manual and plans to include all elements found on any of the bridges in MdTA's inventory. Notwithstanding this, complex bridges such as the Bay Bridge, Key Bridge, and others have unique features that the bridge-inspection team needs to be aware when planning for and performing the bridge

[39] AASHTO, *Manual for Bridge Evaluation*, 2008, Section 2.4.1.
[40] AASHTO, *Manual for Bridge Evaluation*, 2008

inspection. This is why an individual bridge-inspection manual for each complex bridge should be developed. Plus, additional experience and training of the bridge-inspection team is required to evaluate the unique features of complex bridges that would not normally be covered in a routine inspection.

Current practices at MdTA result in bridge-inspection team leaders with extensive experience inspecting complex bridges. MdTA's current Request for Professional Services requires team leaders to be registered PEs in the State of Maryland or eligible for registration within one year of contract award, to have a minimum of eight years experience of bridge inspection including long-span bridges and tunnels, and to meet the qualifications for team leaders as specified in the NBIS. The Request for Professional Services does not require additional inspector training beyond the comprehensive bridge-inspection training course.

5.5.6.2 *Commendable Practices and Opportunities for Improvement*

- The Washington State DOT documents special skills, training, and equipment needs for specific types of inspections
- The Connecticut DOT identifies bridge complexity in three levels and specifies inspection team size and technical grades of team members for each level of complexity.
- **Panel recommendation:** MdTA should prepare and maintain separate individual complex bridge-inspection manuals as recommended by AASHTO.[41]
- **Panel recommendation:** MdTA should set explicit requirements for the additional experience and training required for the bridge-inspection team leaders and the bridge inspectors to inspect its complex bridges and incorporate these in future consultant bridge-inspection contracts.

5.5.7 <u>QC and QA Procedures</u>

5.5.7.1 *National Standards and Current MdTA Practices*

Accuracy and consistency of the data are important since inspection is the foundation of bridge-management and operation systems. Information obtained during inspection is used for determining needed maintenance and repairs, for scheduling rehabilitations and replacements, for allocating resources, and for evaluating and improving designs for new bridges. The accuracy and consistency of inspection and documentation are vital because they not only guide programming and funding appropriations, they also affect public safety. Therefore, the national standards require that systematic QC and QA procedures are used to maintain a high degree of accuracy and consistency in the bridge-inspection program. Typical QC procedures include the use of checklists to ensure uniformity and completeness, the review of reports and computations by a person other than the originating individual, and the periodic field review of inspection teams and their work. QA measures include the overall review of the

[41] AASHTO, *Manual for Bridge Evaluation*, 2008

inspection and rating program to ascertain that the results meet or exceed the established standards. MdTA requires each of its bridge-inspection consultants to have internal QC and QA procedures. These are submitted to MdTA but not reviewed nor approved. However, MdTA is currently developing formal QC and QA requirements for its consultants and in-house staff.[42]

5.5.7.2 *Commendable Practices and Opportunities for Improvement*

- MdTA practices generally conform to NBIS requirements.
- The Wisconsin DOT has documented procedures for conducting office and field QA reviews. It developed checklists covering typical items to review as part of its QA procedures.
- The Oklahoma DOT has procedures for conducting inspections on a "control" bridge to re-evaluate its bridge inspectors.
- The Oregon DOT provides a checklist for the QA team's independent inspection of each bridge during the field review. It allows the QA team to see their ratings done using both NBI and element-level ratings alongside the last inspection ratings for easy comparison.
- The North Carolina DOT, Kansas DOT, and Montana DOT require all inspection reports to be independently reviewed by someone other than the bridge-inspection team leader.
- **Panel recommendation:** MdTA should develop formal QC and QA requirements that define the roles and responsibilities of both consultants and in-house staff.
- **Panel recommendation:** MdTA should review and approve the QC and QA plans that are submitted by its bridge-inspection consultants.

5.5.8 Follow-up on Critical Findings

5.5.8.1 *National Standards and Current MdTA Practices*

NBIS requires that procedures be established to assure that critical findings are addressed in a timely manner. Critical structural and safety-related deficiencies found during the field inspection and/or evaluation of a bridge should be brought to the attention of the owner immediately if a safety hazard is present. Standard procedures for addressing such deficiencies should be implemented, including immediate critical deficiency reporting steps, rapid evaluation of the deficiencies found and implementation of corrective or protective actions, and adherence to a tracking system to ensure adequate follow-up actions. MdTA aggressively tracks all inspection findings. Any issue resulting in complete or partial long term restriction of a structure constitutes a critical inspection finding. The damage is immediately assessed and an action plan developed and implemented as soon as possible. Plans are developed in conjunction with

[42] A list of items that may be included in QC and QA plans is provided in AASHTO, *Manual for Bridge Evaluation*, 2008. FHWA developed a framework for a program for QC and QA that can be found at www.fhwa.dot.gov/bridge/nbis/nbisframework.cfm.

technical experts, construction, operations, and media. The FHWA is notified of critical findings.

5.5.8.2 *Commendable Practices and Opportunities for Improvement*

- MdTA assigns a priority to all its inspection findings, not just the ones deemed critical.
- MdTA aggressively tracks and follows-up on its critical findings.
- The New Jersey DOT developed and uses critical finding procedures based on how quickly the deficiency needs to be address. Each deficiency is logged into a tracking system and monitored until repaired then an inspection team verifies that the repairs were made.

5.6 Inventory

5.6.1 National Standards and Current MdTA Practices

NBIS requires the preparation and maintenance of an inventory of all bridges according to procedures set out by the FHWA.[43] The data from each inspection must be entered into the inventory database within 90 days of the inspection of state bridges. There are similar requirements when bridge modifications alter previously recorded data or when there are changes in load restriction or closure status. MdTA's data-inventory practices conform to MDSHA guidelines.[44] MdTA normally receives the updated data for all the bridges inspected by its consultants at the end of the inspection cycle, which can be eight months after the inspections occur. It subsequently submits the bridge-inspection data annually to the MDSHA for incorporation into the National Bridge Inventory (NBI).

5.6.2 Commendable Practices and Opportunities for Improvement

- MdTA has begun verifying the accuracy of the vertical clearances of its bridges on each lane line during each inspection.
- The FHWA's Federal Lands Highway Bridge Office sets internal performance measures that limit the time allowed between inspection, data entry, and inspection report completion.
- **Panel recommendation:** MdTA should modify its procedures to get the bridge-inspection data into its inventory database within 90 days of the inspection.
- **Panel recommendation:** MdTA should develop a schedule for each bridge-inspection cycle to verify the accuracy of all inventory data (bridge width, length, etc.) that does not change unless modifications are made to the bridge.

[43] US Department of Transportation, Federal Highway Administration, Recording and Coding Guide for the Structure Inventory and Appraisal of the Nation's Bridges, Report No. FHWA-PD-96-001, December 1995.

[44] MdTA uses the MDSHA *Element Level Coding Manual*, which reflects NBIS requirements, and which identifies additional data as well.

5.7 Findings and Recommendations

The Panel observed that while MdTA already complied with the NBIS and was now in the process of phasing in numerous improvements to its bridge-management practices, it could further improve its bridge-inspection practices by observing and emulating commendable practices of other highway agencies. The case studies of MdTA bridge-inspection practices in Sections 4.3.1 and 4.3.2 identified some of these opportunities, such as writing inspection reports so they are more easily interpreted by non-inspection personnel and using more quantification to allow more precise monitoring of deterioration. In addition, numerous specific technical recommendations for doing this have been highlighted as panel recommendations throughout this chapter. The Panel believes that all of these recommendations are important. They address a wide range of technical improvements, for example:

- MdTA should develop and implement plans of action for its scour-critical bridges. It should conduct a baseline hydrographic survey of the Bay Bridge and other major bridges and develop scour-remediation plans for areas showing severe scour. MdTA should follow-up by monitoring any changes in the channel cross sections in accordance with AASHTO procedures.[45] Future hydrographic studies should be conducted as necessary based upon results of channel cross sections.
- MdTA should find and verify the load ratings on the those bridges where ratings are currently missing or incomplete. MdTA should verify the operating ratings for eight of its bridges where legal operating loads exceed the operating ratings. These bridges should be posted if the ratings so indicate.
- MdTA should define and document the requirements for special inspections and for in-depth inspections. It should set typical frequencies for each.
- MdTA should prepare and maintain a system-wide bridge-inspection manual.
- MdTA should prepare and maintain separate individual complex bridge-inspection manuals, in accord with AASHTO recommendations.[46]
- MdTA should develop formal QC and QA requirements that define the roles and responsibilities of both consultants and in-house staff.
- MdTA should formalize its procedures for fracture-critical member inspections, and should change it terminology from catastrophic elements to fracture-critical members, a more nationally accepted terminology.
- MdTA should use electronic inspection data collection and investigate the input templates available in existing systems and those used by other agencies rather than having inspection consultants develop their own.
- MdTA's list of fracture-critical and fatigue-prone members should include notes and sketches showing the location of the elements.

[45] AASHTO, *Manual for Bridge Evaluation*, 2008, Section 2.4.1
[46] AASHTO, *Manual for Bridge Evaluation*, 2008.

Chapter 6: Evaluation of MdTA Current Inspection Program – Tunnels

6.1 National Tunnel Inspection Standards (NTIS)

Although the safety and reliability of highway tunnels are crucial to the regions that they serve, tunnel engineering and tunnel inspection are specialized practices that generally have not been shared by tunnel-owning agencies until recently. Standardization of US tunnel inspection lags behind that of bridge inspection, primarily because there are so many fewer highway tunnels. There are approximately 600,000 highway bridges in the United States while the total number of highway tunnels is fewer than 600. Bridges have been systematically inventoried for decades and bridge inspection has become standardized during that time because federal bridge-inspection regulations were enacted and because federal funding for bridge replacement hinges on inspections. In the period covered by the most recent highway authorization bill, namely 2005 through 2009, between 3.5 billion to 4 billion dollars in each year were authorized for the bridge program. The share received by each state is proportional to its share of the total cost needed to repair or replace its deficient bridges.[47]

Reflecting the fact that there are relatively few highway tunnels, there are also far fewer tunnel engineers than bridge engineers. Similarly, the market for consultants and consultant-produced capabilities to support tunnel professionals is correspondingly smaller. While there are many opportunities for bridge engineers to hold peer exchanges through professional activities such as those of AASHTO or the Transportation Research Board (TRB), tunnel specialists have had far fewer opportunities for this sort of interaction, although the situation is now changing. TRB for many years has had a Committee on Tunnels and Underground Structures. In 2006 the AASHTO Highway Subcommittee on Bridges and Structures formed the Technical Committee on Tunnels (T-20). This committee is working with the FHWA and the TRB on several activities to improve highway tunnel practices and to provide tunnel engineers with increased exposure to improved practices elsewhere. These activities include preparation of a guide, *Technical Manual for Design and Construction of Road Tunnels – Civil Elements*, which will be available within a year; initiation of NCHRP 20-07/Task 261, "Best Practices for Implementing Quality Control and Quality Assurance for Tunnel Inspections;" and creation of NCHRP 20-68A Scan 09-05, "Best Practices for Roadway Tunnel Design, Construction, and Maintenance" that will travel to key highway tunnels across the United States in 2009 and assess the issues and practices being addressed by tunnel owners. It will be a step toward development of national tunnel standards and guidance and will provide data for consideration in the development of a national tunnel inventory. It will also assist in developing best practices for existing and new highway tunnels.

In addition, the FHWA has been working in recent years to bring increased standardization into tunnel inspection. While some tunnel owners have developed their

[47] 23 USC 144 as amended by SAFETEA-LU Section 1101(a)(3), 1114.

own inspection manuals and guidelines, the FHWA has taken steps to encourage all tunnel owners to approach tunnel inspection in similar, systematic ways.[48]

In 2005 the FHWA issued an update to the 2003 *Highway and Rail Transit Tunnel Inspection Manual*.[49] (For simplicity this publication is referred to simply as "the FHWA Tunnel Manual" throughout the remainder of this chapter.) The move for NTIS gained increased momentum the following year when an accident occurred in a tunnel on the Central Artery in Boston (I-90 or informally part of the "Big Dig"). In that accident more than 12 tons of concrete fell from the ceiling of the tunnel and killed a passenger in a car. This accident intensified public concern about tunnel safety and tunnel inspection. In November, 2008, the FHWA began a formal process for considering the reach and content of the NTIS.[50] The FHWA anticipates that the NTIS would likely include requirements for inspection procedures for structural, mechanical, electrical, hydraulic and ventilation systems, and other major elements specific to tunnels such as finishes, the qualification and training of inspectors, and a National Tunnel Inventory. It invited comments on its proposal for NTIS by February 17, 2009. The comments submitted are now being considered by the FHWA. Periodic integrity inspection of tunnels will not be considered mandatory by the FHWA until Congress has created a federal tunnel program similar to the one it previously enacted to safeguard the nation's bridges.

Although this standard-setting process for highway tunnels is just beginning, it explicitly copies the well established approach used for bridge standards. In the case of bridges the NBIS is spelled out in law and the supporting standards, which are set by AASHTO, are incorporated by reference. Compliance with the standards is facilitated by various manuals published by FHWA or AASHTO. Although the 2005 FHWA Tunnel Manual has not yet received the vetting it would need to be formally part of NTIS, and although AASHTO input to the process is just now beginning, it is nonetheless a useful illustration of features that might be incorporated eventually into the NTIS. It is used in this chapter the way that the NBIS and AASHTO *Manual For Bridge Evaluation* were used as key points of reference in Chapter 5.

The FHWA Tunnel Manual addresses the fundamentals of tunnel inspection including civil/structural elements, mechanical systems, and electrical systems. The bulk of the FHWA Tunnel Manual is devoted to civil/structural aspects. Four of these are discussed in the subsections below:

- Qualifications of personnel
- Inspection frequency
- Inspection procedures
- Documentation

[48] FHWA, *Focus*, "Showcasing the DC Tunnel-Management System", October 2005.
[49] U. S. Department of Transportation, FHWA, *Highway and Rail Transit Tunnel Inspection Manual*, 2005 Edition.
[50] National Tunnel Inspection Standards, Advance Notice of Proposed Rulemaking, FHWA, *Federal Register*, November 18, 2008.

6.2 Qualifications of Personnel

6.2.1 Program Manager

The FHWA Tunnel Manual does not address specific qualifications for the tunnel-inspection program manager – it sets out such requirements only for the team leader and team members doing the actual inspections. MdTA's current program manager for tunnel inspection is also the program manager for bridge inspection. Accordingly, the qualifications, experience, training, and continuing education required of the program manager for tunnel inspection follow those that are set for the program manager for bridge inspection. These stipulate that the program manager should be a PE with three years of experience managing engineering projects. They also require the program manager to have completed the two-week federal bridge-inspection course. The program manager position is classified as a "Transportation Design Engineer VII – Bridge and Tunnel Manager." The MdTA program manager devotes 25 percent of full time to performing tunnel-inspection responsibilities per year.

6.2.2 Team Leader, Civil/Structural

The FHWA Tunnel Manual recommends that the team leader for civil/structural aspects be a registered PE or have design experience in tunnels with five years of inspection experience. The team leader should have the ability to identify and evaluate defects that pose a threat to the integrity of a structural member. The team leader should be able to assess the degree of deterioration in concrete, steel, masonry, and timber members.

MdTA uses consultants for all of its annual highway infrastructure inspections. Each inspection team must identify ten key members; one of these must be a tunnel engineer. These consultants perform all types of inspection, including visual, hands-on, underwater, and fracture-critical inspection. Consultants who serve as MdTA tunnel-inspection team leaders must meet NBIS criteria. Plus, the MdTA requires that the leader be a PE with at least three years of experience. The MdTA maintains multiple cost-plus-fixed-fee professional services contracts with these consultants. The team leader is a member of the field inspection team. MdTA team leaders devote different percentages of full time to performing tunnel inspection depending upon their other consultant assignments.

6.2.3 Team Leader, Mechanical

The FHWA Tunnel Manual recommends that the mechanical team leader should be a registered professional engineer or have design experience or be familiar with the type of mechanical systems installed in the tunnel. Such systems include tunnel ventilation, air conditioning. heating, controls, plumbing, tunnel drainage, fire protection, and wells and septic facilities. This individual should have a minimum of three years inspection experience with the ability to evaluate the physical condition as well as the operational condition of equipment. The mechanical team leader should be aware of applicable codes and guidelines for tunnel construction and operation pertaining to mechanical features.

Although the MdTA does not set specific requirements regarding mechanical and electrical experience for the Bridge and Tunnel Manager, the individuals that it uses for this are tunnel experts who specialize in structural, mechanical, and electrical engineering. The special features that they inspect include the ventilation building, and fire protection equipment. They are selected based on specific experience and credentials. They conduct hands-on inspections every two years and inspections at increased frequency as required.

MdTA does not set explicit qualifications for the Team Leader for Mechanical Systems. It requires only that the overall tunnel-inspection team leader be a licensed PE in Maryland. Members of the team may be non-professional engineers with a background in mechanical inspection.

6.2.4 Team Leader, Electrical

The FHWA Tunnel Manual recommends that the electrical team leader be a registered professional engineer or have design experience or familiarity with the type of electrical systems installed in the tunnel. Such systems include power distribution, emergency power, lighting, fire detection, and communications. The individual should have a minimum of three years inspection experience with the ability to evaluate the physical condition as well as the operational condition of the electrical systems and equipment. The electrical team leader should be aware of applicable codes and guidelines for tunnel construction and operation. The FHWA Tunnel Manual lists eight codes to consider in this regard, citing specific Maintenance Testing Specifications of the National Electrical Testing Association, as well as practices recommended by the National Fire Protection Association and the Illuminating Engineering Society.

MdTA does not set explicit qualifications for the Team Leader for Electrical Systems. It requires only that the overall tunnel-inspection team leader be a licensed PE in Maryland. Members of the team may be non-professional engineers with a background in electrical inspection.

6.2.5 Team Member, Civil/Structural

The FHWA Tunnel Manual recommends that team members for inspecting the civil/structural aspects of tunnels should be trained in tunnel-inspection requirements with a minimum of one year of inspection experience.

Credentials of consultant “Key Staff” are verified by MdTA. The consultant verifies compliance with NBIS requirements for all other inspection team members. MdTA verifies that all work is sealed by a PE. Training courses for bridge-inspection work are provided by the FHWA, the National Highway Institute, and the MDSHA.

6.2.6 Underwater Inspection Diver

MdTA requires that an underwater tunnel-inspection diver must have successfully completed a regular diver's training course, have experience relevant to the depth and conditions involved; have experience in surface-applied diving systems, be a graduate civil/structural engineer from accredited university, and have five years of experience with underwater inspection, including at least 500 hours of underwater-structure inspection. The MdTA defines "a year of tunnel-inspection experience" as an entire year during which one's primary duties included inspection-related tasks.

6.3 Inspection Frequency

The FHWA Tunnel Manual is not specific in its guidance regarding the frequency of hands-on inspection, noting that this will vary with the age and condition of the tunnel. New tunnels might need to be inspected up close only every five years, while older tunnels require a more frequent hands-on inspection, possibly every two years. In addition to these periodic hands-on inspections, more frequent walk-through inspections are also recommended, from daily to monthly depending upon the age and condition of the tunnel.

The MdTA Trust Agreement requires annual visual inspections of tunnels. When additional inspection is required, the MdTA uses the MDSHA SIA guidelines to schedule inspections and to assure inspection interval compliance. The MdTA considers hands-on inspections to be in-depth inspections. These are performed on a two-year cycle (more frequent on some structures). Currently the MdTA does not have in-house tunnel-inspection teams; consultants perform both visual and hands-on inspections.

The MdTA submits its tunnel-inspection data to the MDSHA annually. The MDSHA conducts compliance reviews of MdTA tunnel-inspection practices every four years. Post-construction inspections are conducted in conformance with SIA guidelines. Vertical clearances are checked during annual inspections. Horizontal clearances are checked on an as-needed basis. When damage has been reported, the MdTA immediately assesses it and develops a plan of action, with follow-up as needed.

6.4 Inspection Procedures

6.4.1 Type and Severity of Defects

The FHWA Tunnel Manual recommends that visual inspection should examine all exposed surfaces of structural elements. Cracks and spalls should be measured in length and width. Corrosion of steel members should be measured for the length, width, and depth of corrosion. Defects should be classified as minor, moderate, or severe according to detailed instructions set out in the FHWA Tunnel Manual. These defects can be of numerous types. In concrete structures, scaling, or gradual and continuing loss of surface mortar and aggregate, can range from minor (less than ¼ inch of surface loss) to severe (loss exceeds one inch). Eight different types of cracks are described in the FHWA

Tunnel Manual (transverse, longitudinal, horizontal, vertical, diagonal, pattern or map cracks, D-cracks, and random cracks). Three levels of severity are identified for cracks. The FHWA Tunnel Manual also delineates three different severities of spalling, or circular depressions in the concrete. In addition, the FHWA Tunnel Manual identifies a number of other forms of distress including joint spalling, pop-outs, mudballs, efflorescence, staining, hollow areas, honeycombs, and leakage.

For steel structures, the FHWA Tunnel Manual provides descriptive background on corrosion, cracks, buckles and kinks, and leakage, along with commentary on relative severity. It identifies levels of distress in protection systems such as galvanizing or painting. Similar guidance is offered for inspectors of masonry structures, including deterioration of stones, bricks, or blocks; deterioration of the mortar; and problems with shape, alignment, and leakage. In addition to visual inspection using the above taxonomy, structural elements should be periodically sounded with hammers to identify hidden defects.

MdTA collects tunnel condition data using MDSHA's SIA and Element Level Coding Manual. MdTA finds that collection of element-level data helps to quantify and qualify the level of deterioration and also to determine rates of deterioration. Keeping track of inspection data at the element level tunnel allows the MdTA to be more comprehensive and to monitor trends in deterioration.

Using a system modeled after the one used in the FHWA Bridge Inspector's Manual discussed in Chapter 5, the FHWA Tunnel Manual sets out a ten-level tunnel rating system. The best rating – 9 – applies to newly completed construction. The next best rating – 8 – is defined as "excellent condition, no defects found." The lowest ratings are – 1 – "critical condition, immediate closure required," and – 0 – "critical condition, structure is closed and beyond repair."

The MdTA applies a similar but less detailed scale to rate condition. Its consultants assess inspection findings using a scale of "E" – Emergency, and 1 through 5, with "1" designating "first" priority. MdTA's current priority-rating system is under review and will likely be revised. In addition, a separate MdTA tunnel-inspection policy and procedure manual is currently being developed.

6.4.2 Inspection Forms

The findings and results of MdTA tunnel inspections are recorded using new standard forms being compiled for the 2009 inspections. These are designed to supplement the asset-management system that is currently under design. Any defect that receives a MdTA priority code E, 1, or 2 is required to have a photo or sketch included in the report. Inspection report data are obtained and maintained in both hard-copy and electronic formats.

6.4.3 QC and QA Procedures

Each consultant implements its own internal QC and QA procedures. The MdTA is currently developing formal QC and QA requirements for both in-house staff and consultants.

6.4.4 Safety-Critical Repairs

When an inspection reveals severe defects that could pose a danger to the traveling public, tunnel personnel, or inspection team members, the FHWA Tunnel Manual recommends that this be noted as a "critical repair." A critical repair can be dealt with by:

- Closing the tunnel until the defect is removed or repaired,
- Cordoning off the area from public access until the defect can be removed or repaired, or
- Shoring up the structural member if this is appropriate.

During MdTA inspections any issue resulting in complete or partial long term closure of a structure is considered a critical inspection finding. When such an item is found, the MdTA develops an action plan and implements the plan as soon as possible. These plans are developed in conjunction with technical experts, construction, operations, and media. The FHWA is notified of any critical items.

6.4.5 Load Rating and Load Permitting

All legal Maryland truck loads (H-15, HS-20, T-3, 3S2) are permitted to use both highway tunnels. The load ratings of the tunnels are currently being reevaluated. Both tunnels are to be load rated for H-15, HS-20, T-3, and 3S2 vehicles. Load ratings are performed by either consultants (sealed by a MD licensed PE) or in-house staff. For all new projects the MdTA requires that the initial load rating be performed at the completion of final design.

6.4.6 Underwater Members

Both MdTA highway tunnels are below the mudline for the full length of the tunnel. Underwater inspection is required only when scour is found by comparing past data and current data. Underwater inspection is performed if any issues are found within the tunnel, or if scour has been detected following soundings or hydrographic surveys. Sounding data for each tunnel have been collected in the past to monitor the extent of scour. Only one hydrographic inspection of tunnels was done in previous years. During the current inspection year, MdTA is performing a hydrographic survey. In the future it will be done every four years and permit comparison with the data from previous hydrographic surveys. The Panel recommends that MdTA conduct a baseline hydrographic survey on each of its two tunnels. It should develop scour-remediation plans for areas showing severe scour, and should follow-up by monitoring any changes in the channel cross sections. Future hydrographic studies should be conducted as necessary based upon results of channel cross section assessments.

6.4.7 Flood Protection

During its discussion of tunnel-questionnaire results with MdTA staff, the Panel discussed the flood-protection measures adopted at the two MdTA highway tunnels. As for tunnels elsewhere, these measures are aimed at preventing storm water from entering the tunnel via the vehicular entrances, rather than leakage within the tunnel. MdTA has adopted its own level of storm-surge protection to apply in this regard. Fuller analysis of the geographic conditions at the tunnel entrances and meteorological information on the region could be used to assess the potential for flooding conditions and to develop a clearer definition of its flood-protection policy. MdTA should confer with the Maryland Department of Environment in developing this policy.

6.4.8 Mechanical Systems

The FHWA Tunnel Manual notes that the main purpose of an in-depth inspection is to verify that the mechanical systems are performing as expected. Current practice varies widely in terms of how frequently to conduct inspections for mechanical systems such as pumps, fans, or motors. Eight percent of US tunnel owners conduct inspections at least once a week, 28 percent conduct monthly inspections, 28 percent conduct mechanical inspections on a quarterly to annual basis, and 36 percent conduct inspections at intervals of two years or longer. The FHWA Tunnel Manual notes that it is up to the tunnel owner to determine the appropriate frequency of in-depth inspections. They can be performed concurrently with the civil/structural inspections or as deemed necessary by the owner because of the age of the mechanical equipment and the amount of equipment needed for proper tunnel operation.

MdTA requires annual mechanical inspection of its highway tunnels. When a defect is found during these inspections that defect will be inspected again on a more frequent basis until it is corrected.

The FHWA Tunnel Manual states that mechanical inspection of tunnels involves verifying the condition and operation of tunnel equipment and systems. This includes a review of the physical condition of each piece of equipment for damage due to environmental and operational conditions. Each system or piece of equipment should be checked for operation, unless operation of the equipment would cause damage to equipment and/or inspection personnel, or significant disruption to the operation of the tunnel. Any equipment that cannot be operated should be identified, its physical condition noted, and such information immediately reported to the tunnel owner. The FHWA Tunnel Manual provides separate guidance for tunnel ventilation, air conditioning, heating, controls, plumbing, tunnel drainage, fire protection, and wells/septic systems. This guidance typically includes inspection of the maintenance records, noting the physical condition of key system components, verifying that the equipment is operational, and engaging a specialized testing firm to perform tests of certain features.

6.4.9 Electrical Systems

In-depth electrical inspection is done to verify that the electrical systems are performing as expected. It is up to the tunnel owner to determine the frequency of and which items should be checked during these in-depth inspections. Six percent of highway tunnel owners report that they now conduct electrical inspections at least once a week, 16 percent do so monthly, 34 do inspections on a quarterly to annual basis, and 44 percent do them at intervals of two years or longer. Electrical inspections can be performed concurrently with the civil/structural inspections or as deemed necessary by the owner because of the age of the electrical equipment and the amount of equipment needed for proper tunnel operation.

MdTA requires annual electrical inspection of its tunnels. When a defect is found during these inspections that defect will be inspected again on a more frequent basis until it is corrected.

The electrical system inspection should verify the condition and operation of the power distribution, emergency power, lighting, fire detection, and communication systems. The FHWA Tunnel Manual sets out specific items to look at for each of these components. In general, these inspections entail visual inspection of wiring for damage and corrosion, ensuring that all enclosures and box covers are in place and secure, checking conformity with applicable codes of the National Fire Prevention Association and the National Electric Testing Association, checking that all disconnects are properly identified as to the items they disconnect, checking that all loads are properly identified as to the source or means of disconnect, and assuring that electrical safety operating diagrams for all large power systems are posted to comply with regulations of the Occupational Health and Safety Administration and the National Fire Prevention Association.

6.4.10 Other Features

The FHWA Tunnel Manual also addresses a number of other tunnel-specific features. Finishes, such as ceramic tiles, porcelain-enameled metal panels, precast concrete panels, or epoxy coatings should at least be rated in general terms such as excellent, good, fair, or poor. Drainage systems should be inspected to make sure that they are capable of handling ground water, rain, and water from fire-protection systems. Appurtenances such as railings, safety walks, and utility supports should also be rated.

The FHWA Tunnel Manual lists a variety of standard equipment used to protect tunnel inspectors and to help them gain access to the features to be inspected. MdTA inspectors use all standard safety equipment as needed, including traffic vests, harnesses, hardhats, gloves, work boots, life vests, fall-arresting lanyards, safety glasses, and confined space equipment. They use standard access equipment such as a bucket truck and ladders. Applicable NDE methods are a available as needed. The MdTA complies with federal and state occupational health and safety requirements in the procedures and equipment it uses in inspecting within confined spaces.

6.5 Documentation

The FHWA Tunnel Manual states that inspection results should be thoroughly and accurately documented. Any severe defects in the highway tunnel structure should be recorded in a sketch showing the location and size of the defect as well as a verbal description of the defect. All severe defects should be photographed; representative photos of minor or moderate defects are sufficient. All defects should be located on sketches or the computer images with specific dimensions that identify their location. Defects should be quantitatively described using a taxonomy like the one described in Section 6.4.1. It is important to set priorities for any repairs that are to be performed; the FHWA Tunnel Manual recommends distinguishing between critical, priority, and routine repairs. A formal report should be prepared that summarizes the findings, identifies deficiencies, informs maintenance budgeting decisions, and supports maintenance work scheduling.

As discussed in Section 6.4.2, the results of MdTA tunnel inspections are recorded using new standard forms being compiled for the 2009 inspections. Any defect that receives a MdTA priority code E, 1, or 2 is required to have a photo or sketch included in the report. MdTA inspection report data are obtained and maintained in both hard-copy and electronic formats.

The MdTA inspection consultants update the inventory data during their annual inspections. There are approximately 80 data fields to be maintained for each structure, plus additional SIA data. The data are submitted through the MdTA to the MDSHA. MdTA's Engineering and Construction staff are allowed access to the data. Historical documentation for each tunnel such as plans, specifications, as-built plans, estimates, photos, inspection reports are included in the inventory data.

6.6 Commendable MdTA Tunnel-Inspection Practices

The current and planned tunnel-inspection procedures of the MdTA include many commendable practices, including the following:

- Although no mandatory national highway tunnel standards currently exist, MdTA requires tunnel inspectors to meet the minimum qualifications for bridge-inspection personnel set out in NBIS criteria.
- MdTA is currently developing QC and QA program for its highway tunnels.
- MdTA is planning to audit tunnel-inspection findings the way it currently audits bridge-inspection findings.
- MdTA is developing a form that it can use as a tunnel-inspection template.
- MdTA plans to inspect on an element-level basis and record the data in an electronic inspection data-management system.

The most noteworthy aspect of MdTA's approach is, by MdTA's assessment, its recent adoption of a hands-on inspection policy for all structures as well as a policy that aggressively tracks inspection findings.

6.7 Findings and Recommendations

There are no mandatory national standards that can be applied to assess tunnel-inspection practices, although such standards are currently being developed by the FHWA with input from AASHTO and others. MdTA's procedures are generally modeled after its bridge-inspection practices and this is a reasonable approach to adopt for highway tunnels. Based upon the practices proposed in the FHWA Tunnel Manual, MdTA's survey responses, and a case study comparing PANYNJ tunnel inspection with MdTA practices in 2006 and 2008, the Panel believes that current MdTA tunnel-inspection practices are comparable to the practices of other agencies. MdTA has been improving its highway tunnel inspection in recent years, and it plans to make further improvements to its tunnel-inspection program including development of a program for QC and QA, auditing of inspection results, and development of a tunnel-inspection template. Based upon the case study described in Section 4.3.3, the Panel recommends that:

- MdTA inspection reports should be formatted for general distribution to operations and engineering staff so that personnel not directly involved with the inspection program can understand its results and purpose.
- MdTA should continue to improve documentation relative to location of defects. To make inspection reports useful in the context of deterioration over time, photographs should include the item number and priority for cross-reference in different inspection periods.
- MdTA inspection reports should provide more quantitative detail to allow readers to track the rate of deterioration from one inspection to the next. MdTA should apply the taxonomy of deterioration and the gradations of severity set out in the FHWA Tunnel Manual or define similarly specific ratings of its own.
- MdTA tunnel-inspection reports should continue to upgrade the discussion of any remedial actions that are recommended by the inspection teams.
- MdTA tunnel-inspection reports should clarify requests for monitoring. In past reports monitoring has been recommended for deficiencies that are not true monitoring situations. For example, wall movement is an important development that requires monitoring whereas hairline cracks or honeycombing do not. Reports need to be clear about situations where tracking, not repair, is the purpose of the recommended monitoring.

Based upon the FHWA Tunnel Manual and MdTA responses to the Panel's questionnaire, the Panel further recommends the following:

- MdTA should conduct a baseline hydrographic survey on each of its two highway tunnels. It should develop scour-remediation plans for areas showing severe scour and should follow-up by monitoring any changes in the channel cross sections. Future hydrographic studies should be conducted as necessary based upon results of channel cross section assessments.
- There are no clear guidelines for protecting highway tunnels from storm surges. The MdTA, like tunnel owners elsewhere, has relied on its own judgment to develop appropriate levels of protection. MdTA should confer with the Maryland

Department of the Environment and set explicit storm-surge levels against which it will ensure that MdTA tunnels are adequately protected.

- MdTA should prepare individual tunnel-inspection manuals for each of its two highway tunnels.
- MdTA should consider the use of the FHWA Tunnel Manual.[51] It was developed as part of FHWA's Tunnel Management System that also includes the Maintenance Manual[52] and database software.
- The improvements planned by MdTA staff are valuable. The Chairman and the Members of the Authority should assure timely implementation of these plans by requiring MdTA to develop a strategic plan for implementation of inspection improvements for bridges and tunnels, including key milestones and a schedule for achieving them.

[51] FHWA, *Highway and Rail Transit Tunnel Inspection Manual*, 2005 Edition.
[52] FHWA, *Highway and Rail Transit Tunnel Maintenance and Rehabilitation Manual* (Publication No. FHWA-IF-05-017), 2005.

Chapter 7: Asset-Management Systems

7.1 Origin of Asset-Management Systems

In response to the 1967 collapse of the Silver Bridge, which crosses the Ohio River between West Virginia and Ohio, the Congress passed legislation that set uniform standards for bridge inspection, required the states to inspect bridges, and created the NBI.[53] This began the process of systematic management of these assets. The NBI distinguishes between bridges that are functionally obsolete and structurally deficient. Bridges are classified as functionally obsolete when their deck geometry, load-carrying capacity, clearance, or approach roadway alignment no longer meet the criteria of the system of which they are a part. Bridges are classified as structurally deficient when significant load-carrying elements are found to be in poor or worse condition due to deterioration and/or damage, or the adequacy of the waterway opening being provided by the bridge is determined to be extremely insufficient to the point of causing overtopping with intolerable traffic interruptions. Major bridges and tunnels are complicated structures with long lives, numerous component systems, and complex relationships between them. As these facilities age, coordination of all their associated condition, maintenance, and repair aspects requires continuous oversight.

In the years since bridge inspection and the NBI began, increased use of automated data collection and electronic file storage have brought new management tools to this task. Bridge and tunnel owners typically manage numerous bridges, highway segments, tunnels, and other assets, each of which has a wide array of engineering features. All this is reflected in massive amounts of data: it is not unusual for a state to manage thousands of bridges, each of which has more than 100 inventory features. Asset-management systems have been developed to manage this huge volume of data and to help make the information applicable to diverse management needs such as assessment of current condition and needs based on inspection, programming of maintenance and repair activities, planning facility replacement, and valuation of the depreciated assets. The introduction of automated management systems for bridges and tunnels has the potential to insure attentive responses to facility needs, to treat facilities and needs even-handedly, to improve coordination among the many specialized staff groups responsible for the facilities, and to program repairs and replacements efficiently.

Each type of asset – pavement, bridge, or tunnel – has many unique features, so separate management systems have evolved for each of these types of facilities. A number of "off-the-shelf" systems have been developed to address such needs for pavements and bridges, Nonetheless, each transportation agency operates in its own regulatory, legal, market, labor, and political environment, so its asset-management systems may need to be

[53] Waseem Dekelbab, Adel Al-Wazeer, and Bobby Harris, "History Lessons from the National Bridge Inventory," *Public Roads*, Vol. 71, No. 6, May/June 2008.

customized to reflect specific agency needs. Further, each individual bridge or tunnel has its own unique features, and further customization of existing systems may be needed to make them applicable to any particular structure.

While transportation agencies collect and manage ever-increasing volumes of electronic data on their facilities they also collect and manage much information that is not in electronic format. Converting data-collection to electronic formats can entail substantial phase-in periods and costs, and converting hard-copy information to electronic formats can also be costly. Further, the power of asset-management systems hinges on the quality and comparability of the data that support them, and converting from manual to automated systems may also impose requirements for unfamiliar standardization or additional data vetting. In short, the potential of automated asset-management systems cannot be achieved without making broader managerial and organizational changes in how data are defined, collected, entered, and used.

Asset-management systems thus entail up-front costs for the associated software and hardware, for customization of the system to meet agency needs, for the training and equipment needed to produce data to support the system, and for the technical staff needed to manage all this. Reflecting these costs, transportation agencies understandably tend to develop these systems in stages, adding new areas of capability as more and more areas of an agency's information becomes automated and compatible.

7.2 Motivation for Bridge-Management Systems

The primary motivation for using systematic bridge management is for owners to merge quality data with well-defined objectives to help improve business decisions and resource allocations. A secondary benefit is to store the data in an inventory for compliance with the terms of the NBIS. The description of each state's bridges that is provided to the NBI is also used by the FHWA in distributing federal funds among state DOTs for bridge replacement, rehabilitation, and systematic preventive maintenance. The Federal Highway Program first made specific authorizations to assist in the replacement of bridges with the creation of the "Special Bridge Replacement Program," which was introduced in the Federal-Aid Highway Act of 1970. This program required the US DOT to inventory all bridges located on the Federal-aid system over waterways and other topographical barriers, and to classify them and set priorities for their replacement. States can seek federal assistance for bridge replacement funds based on this classification.[54] Over the years, the purposes for which bridge replacement funds could be used have been continuously redefined and extended. In 1978 the program was expanded to allow federal funding for repair, rehabilitation, and replacement. The most recent highway act, passed in 2005, calls this program "The Highway Bridge Program." It allows federal funds to be used for:

- systematic maintenance,

[54] US House of Representatives Report 110-750, National Highway Bridge and Highway Reconstruction and Inspection Act of 2007.

- replacement of structurally deficient or functionally obsolete bridges with new facilities,
- rehabilitation to restore the structural integrity of a bridge or to correct major safety defects,
- maintenance activities including painting, seismic retrofitting, systemic preventative maintenance, and minimally corrosive anti-icing and de-icing applications, and
- installation of scour countermeasures.

Funds for the Highway Bridge Program are apportioned to the States using a formula based in part on each State's relative share of the total cost to repair or replace deficient highway bridges. The Federal share for the Highway Bridge Program is 80 percent, or 90 percent for bridges on the Interstate system. The program also requires that at least 15 percent of the amount apportioned to each State in each fiscal be used for bridges that are not on Federal-aid highways. While the MdTA does not itself receive any federal funding from this program, it does stand to benefit from the advances that have been made in asset-management systems. In addition, MdTA's bridges must be included in the inventory of state bridges that is reported to FHWA by MDSHA.

7.3 Modified Approach to Infrastructure Reporting

Accounting practices recommended by the Government Accounting Standards Board (GASB) in 1999 further enhance the value of having good asset-management systems. GASB is a private, non-profit organization that defines generally accepted accounting principles for state and local governments in the United States. GASB issued guidance, cited briefly as GASB 34,[55] that recommended how state and local governments should report the value of infrastructure assets such as roads, bridges, and tunnels. Nationwide, the value of these assets is huge, on the scale of trillions of dollars. Although toll authorities like the MdTA have prepared financial statements regularly for years, this has not always been the practice for many units of state and local government. In recent years, the need to do so has become increasingly apparent as more governments turn to innovative financing techniques such as GARVEE bonds, infrastructure banks, and new tolling arrangements. These arrangements place new demands on public agencies to account for the value of their assets. GASB 34 required state and local governments to identify these assets and include their value on their annual balance sheets. The value of the assets could be based on either historical costs or discounted replacement costs. To comply with GASB 34 agencies must either account for depreciation of their bridges and tunnels or adopt a "modified approach." Agencies opting for the modified approach must meet a number of conditions, including:

- provide a current inventory of their road, bridge, and tunnel assets
- conduct condition assessments of these assets every three years or more frequently,

[55] GASB, *Basic Financial Statements – and Management's Discussion and Analysis – for State and Local Governments*, 1999.

- provides estimates of future costs needed to maintain the system in appropriate condition,
- ensures that the condition of the assets as measured by these assessments is being adequately maintained.

The GASB 34 modified approach includes more detailed instruction on standardized condition reporting. For bridges, adherence to NBIS procedures satisfies this aspect, and incorporation of this condition data in an automated bridge-management system can greatly facilitate the reporting of past and projected preservation costs associated with GASB 34 requirements.

Use of the GASB 34 modified approach would enhance MdTA's use of asset management as a valuable tool in system preservation and long term infrastructure planning.

7.4 Current Asset-Management Practices of State DOTs

All states use asset-management systems of some sort. More than 45 states and other transportation agencies use the Pontis system, which was developed for the FHWA in 1989 and is now supported through AASHTO. Pontis is a software program that can be used as a comprehensive bridge-management system. The program can store bridge inventory and inspection data; formulate network-wide preservation and improvement policies for use in evaluating the needs of each bridge in a network; and make recommendations for what projects to include in an agency's capital plan for deriving the maximum benefit from limited funds.

Pontis is designed to meet the needs of a state's department of transportation, which typically is responsible for inventorying thousands of bridges, many of which are relatively simple structures. It is less well matched to the needs of agencies like the MdTA, which manage a smaller number of structures, including several complex ones.

Pontis is designed to support the entire bridge-management cycle. It stores bridge inventories and records inspection data. Once inspection data have been entered, Pontis can be used to track maintenance and for report preparation. Pontis integrates the objectives of public safety and risk reduction, user convenience, and preservation of investment to support budgetary, maintenance, and program policies. It provides a systematic procedure for allocating resources among the bridges owned by the agency.[56]

In practice, however, few states use all of the features of Pontis or other automated systems.[57] Rather, they tend to use their bridge and tunnel-management systems for immediate, practical data storage rather than long-term, high-level support for planning,

[56] AASHTO, AASHTOWare Catalog, July 1, 2008 – June 30, 2009, pp. 37-44.
[57] Current state practices reported in this paragraph and the next are based on an ongoing NCHRP Synthesis 37-07. These preliminary results are based on Michael J. Markow, "Use of Bridge Management for Agency Decisions in Planning, Programming, and Performance Tracking" (Based heavily on ongoing *Transportation Research Circular* E-C128, October 2008, pp. 31-35.

rehabilitation, and replacement decisions. While more than 80 percent of state agencies use bridge-management systems for condition-appraisal data, only about half use their systems to support GASB 34 requirements, and only one in ten use them for economic analyses of life-cycle or user costs. State bridge-management systems in use vary considerably in their scope. Some states use the systems for data management, and do not tie the systems to planning or programming decisions. Most states have automated systems with potential for significant planning and programming applications, although by no means is all of this potential being used. A recent survey of states showed that:

- Their systems deal with technical aspects of bridge condition and performance) rather than economic or social impacts.
- Their systems are focused near-term rather than long-term horizons.
- Recommended actions are reactive to current conditions rather than proactive or anticipatory.
- Recommended actions focus on a single strategy rather than a comparative analysis of several options.
- Calculated costs are solely those attributed to the agency and do not include the costs borne by road users.
- Costs are calculated for near-term budgets rather than for the full life cycle.
- The systems apply basic data management rather than predictive models, scenario analyses, trade-off analyses, and economic analyses.

The value of fully automated bridge-management systems hinges on whether or not such systems add value to the more traditional approaches that they replace. Typically the traditional approaches involve more manual, engineering judgment and less formalized data entry. Some states have found that switching to the more automated systems is not always as beneficial as anticipated. For example, when the data needed to drive these systems are not well established the predictions and priorities that emerge from the systems may be less reliable than those developed using traditional approaches.

As asset-management systems continue to evolve, they are likely to serve more and more objectives, key ones being establishment of optimal investment funding levels and adherence to performance goals for facilities, as well as identification of appropriate timing of maintenance and repair for each individual bridge and tunnel throughout its life cycle. Performance goals may include:

- Preservation of bridge condition: NBI condition ratings, health index, and sufficiency rating.
- Traffic safety enhancement: Geometric and inventory/operating rating.
- Protection from extreme events: Vulnerability ratings for scour, fatigue/fracture, earthquake, collision, overload, and other human-made hazards.
- Agency cost minimization: Initial cost, life-cycle agency cost.
- User cost minimization: Life-cycle user cost.[58]

[58] NCHRP, Report 590, *Multi-Objective Optimization for Bridge Management Systems*, 2007, p. 1.

As the systems become more multipurpose, there will likely be more instances when the various goals conflict or compete with each other. Anticipating this difficulty, research has also been done to extend the systems so that they resolve such conflicts themselves. The foundation of any good bridge management system is a good inspection program together with a preventative maintenance program. As state DOTs search for more cost-effective ways to stem the tide of bridge deterioration, bridge preservation is gaining higher priority. Recently the AASHTO Subcommittee on Bridges and Structures created the Technical Committee for Bridge Preservation (T-9) as a focal point for improvements in this area. Regional groups are being formed to encourage best practices in this area as part of the AASHTO Transportation System Preservation Technical Services Program (TSP-2).

7.5 Recent Advances in Asset Management for Tunnels

In principle similar benefits and issues are raised by asset management for bridges and for tunnels, but in practice the status of automated asset-management systems for the two types of facilities is quite different. NBIS began in the 1970s and automated systems for management of bridge condition data have been in use for around 20 years, while mandatory tunnel-inspection standards do not yet exist in the United States. Automated bridge-management programs are in widespread use and several different sets of software to support them are currently available to agencies. Asset-management systems for tunnels are not as developed or broadly used.

Recently, however, highway tunnel owners have new tools available for asset management. The FHWA has produced two manuals and accompanying software to support tunnel-management systems. Released in 2003 and available to highway and transit tunnel owners and operators across the country, this tunnel-management system was jointly developed by the FHWA and the Federal Transit Administration. In addition to the FHWA tunnel inspection manual discussed in Chapter 6, it also includes a maintenance manual. These manuals provide guidelines for inspecting, maintaining, and rehabilitating highway and rail transit tunnels.[59] The manuals are accompanied by software that can be used by highway and transit tunnel owners to collect and manage data on tunnel components MdTA should review these materials and revise its procedures, as appropriate, to make use of them.

These developments parallel the ones taken in the initial stages of asset management for bridges. As the proposed NTIS are examined and refined it is likely to result in a National Tunnel Inventory with all the detailed requirements and supporting manuals and software that are now available for the NBI. MdTA should include tunnels in its asset-management explorations, and pay close attention to developments related to NTIS.

[59] FHWA, *Highway and Rail Transit Tunnel Inspection Manual* (Publication No. FHWA-IF-05-002), revised 2005 and FHWA, *Highway and Rail Transit Tunnel Maintenance and Rehabilitation Manual* (Publication No. FHWA-IF-05-017) 2005.

7.6 Asset Management at MDSHA

The state of Maryland does not maintain all the bridges in the state, only those on the state route system. As a result, the MDSHA is responsible for maintaining only about 2,500 bridges, which is about half of all highway bridges located in Maryland. Maintaining the remainder is the responsibility of local governments and other agencies, although the MDSHA must ensure that all highway bridges located on public roads in Maryland are inspected per the NBIS. Relative to large states or states that are responsible for all bridges in their jurisdiction, MDSHA's reduced scale of operations allows its staff to achieve a high degree of managerial centralization as well as personal familiarity with the bridge inventory. The MDSHA bridge engineering staff are all located in the same office in Baltimore and they are able to drive to any bridge in the state within a few hours. Direct personal communication between inspection, engineering, and maintenance staff is normal practice; encouraged by policy and enhanced by shared location.

All MDSHA bridges are inspected every two years, and the summary condition of each is entered in the database. If any significant new deterioration is observed, an "engineering request" is made to have the condition assessed by one or another of five in-house engineering teams. MDSHA conducts an annual "tour" to decide which projects to include in its programs. Participants in the tour are at supervisory and management levels, more senior than the individuals on the five assessment teams. The tour reviews all structurally deficient bridges or others for which the "engineering request" resulted in recommended work. It selects projects to include in the coming year's repair and rehabilitation programs. At any time there are about 200 bridges in the system flagged for repairs, and about 20 actively being repaired.

MDSHA uses its own custom-built system for automated handling of bridge information. It experimented with Pontis in previous years but decided against using it because of the heavy demands that Pontis imposed to feed its life-cycle management features. MDSHA was reluctant to make this investment because Pontis projections did not appear to improve on the facility-specific project priorities and estimates that MDSHA was already getting from its inspection and management program. The MDSHA bridge-management system does make use of an automated database, but the most noteworthy feature of MDSHA's overall system is its ability to cascade engineering judgment, priority setting, and task management in a coordinated, centralized process.

The heart of MDSHA's bridge-management system is not the automated database itself, but an annual *State of the State of Maryland Bridges* report. This report has sections that review existing bridge system data for structurally deficient bridges, functionally obsolete bridges, deck overlays, weight-posted bridges, bridges judged to be possible terrorism targets, and a number of other categories. It gives special attention to projects related to system preservation and arranges separate work programs for painting, deck overlays, barriers/railings/fences, small structures, and others. It includes estimates of the funds needed to make the needed repairs, and sets priorities for large bridge projects. Structurally deficient bridges are assigned to a bridge-replacement program, a bridge

deck replacement/major bridge rehabilitation program, or a bridge substructure rehabilitation program. Other sections of the annual *State of the State of Maryland Bridges* report set out priorities for bridge painting, bridge-deck overlay, the barrier/railing/fencing, or other programs.

All in all, MDSHA's bridge-management system uses a combination of resources including an automated system, staff engineering expertise, and easy in-house communication. An automated database is used to keep track of the condition, work needed, and work underway on each bridge. Other key parts of the system are the manual examinations of the five engineering teams, the annual tour of structurally deficient bridges, and the *State of the State of Maryland Bridges* report that organizes all this information by theme and sets priorities for inclusion in various state programs. It performs similar inventory, maintenance management, project planning, and task management chores to those handled by all-encompassing automated bridge-management systems, but it does so in ways that make full use of the engineering expertise and close communication of MDSHA staff.

7.7 Asset Management at MdTA

The MdTA uses automated systems for various project-management chores and has been exploring wider use of these systems as well as experimenting with other systems that could improve systematic asset management. Currently MdTA uses IBM's Maximo asset-management System to assist its bridge management. Maximo is a transaction-oriented system for maintenance management that is useful in tracking work schedules, materials supplies, and crew assignments. MdTA's use of the system is primarily as a large spread sheet for condition data; it does not attempt to use this data as a part of its planning, programming, or financial reporting activities. An early version of Maximo is currently being used by MdTA; more recent versions would offer additional capabilities. MdTA has been experimenting with fuller use of automated asset-management systems. For example, it considered one proprietary system (Inspectech) but did not pursue this possibility because it did not fit the specific needs of MdTA structures. (It would have required, for example, representing the Bay Bridge as a series of small structures instead of as a single large one.) Currently the MdTA is weighing a proposal (received in January 2009) to conduct a test of another proprietary system (Advitam). This particular system was judged by MdTA to be potentially well matched to agency needs, based in part on reports that it is being used by clients with comparable facility inventories. The proposed test would include one major structure and six minor ones. It would flag key items and help MdTA staff track deficiencies from one inspection to the next. This capability is a modest extension to MdTA's capacity; it would be more accurate to characterize it as improved data management rather than actual asset management. The Panel commends MdTA for its exploratory steps toward improved asset management and encourages their continued exploration in this area.

MdTA is also taking steps in related areas that could assist asset management. For example, it has been increasing its use of Google Earth as the geographic element and

linking all its records to aerial photo imagery/locations as well as word search software to facilitate electronic access to all documents.

MdTA's complex structures pose unique asset-management challenges, and MdTA should continue to explore solutions that fit these needs. But for the routine structures in its inventory MdTA should coordinate its improvements in asset management with the MDSHA. MdTA and MDSHA bridge-inventory activities are linked in several ways. The condition data that MdTA collects for its bridges, like that of county bridges in Maryland, is forwarded to the MDSHA and then submitted to the FHWA. MdTA uses MDSHA's inventory guide for this purpose.[60] MDSHA reviews MdTA's compliance with the NBIS. Such linkages might be expedited if the two agencies used similar systems. Both have a total number of structures that is manually manageable, although MdTA has a number of complex structures for which the current MDSHA database would not be applicable unless it were refined appropriately. Nevertheless, there may be aspects of the MDSHA system that apply to MdTA needs, and it could be mutually advantageous for MdTA to adopt them.

While there are potential advantages to be gained by implementing a full-featured asset-management system, such an extension is a long-term step that requires a commitment of budgetary resources in terms of system development and customization, staff, data collection, staff training, and time. It also requires a rebalancing of chores done by data collection and computer routines versus that done by staff engineering teams. Because of these costs and task redefinitions most agencies have opted to move gradually toward full use of asset-management systems, and the MdTA's initial exploratory steps have been similarly limited.

7.8 Findings and Recommendations

- The Panel commends the MdTA for exploring systems to improve its asset management for bridges. It should also closely monitor developments related to NTIS, and explore the usefulness of the supporting FHWA tunnel-management system manuals and software.
- Throughout its review the Panel has made several recommendations that relate to the importance of systematic identification of problems, as well as appropriate documentation to assure that priority is given to follow-up actions related to them. This is the key motivation that should drive MdTA's exploration of asset-management systems.
- MdTA should coordinate the development of its asset-management system with MDSHA to benefit from MDSHA's experience in balancing automation and engineering judgment. The priority that MDSHA's approach gives to system preservation is another positive feature. There are enough similarities in the operating environments of the two agencies that MdTA could profit from MDSHA experience. It would benefit both agencies to coordinate in this area as

[60] MDSHA, *Guide for Completing Structure Inventory and Appraisal Input Forms*, June 2003.

they collaborate on overlapping tasks like inventory reportage and NBIS compliance.

- To the extent that the MdTA is able to identify areas of particular concern through its inspection of bridges and tunnels, it should establish a systematic way to ensure that those repairs are being done as part of an asset management plan.
- MdTA should consider the adoption of the GASB 34 modified approach to enhance its asset management as a tool in system preservation and long-term infrastructure planning.
- MdTA should set explicit milestones and goals for the development and introduction of its asset-management system as part of its strategic plan for improved inspection practices, which is called for in a separate Panel recommendation elsewhere in this report.

Chapter 8: Findings and Recommendations

MdTA has made many improvements to its engineering practices in recent years, and to its bridge- and tunnel-inspection programs in particular. The Panel commends MdTA for the improvements it has made, is now making, and plans to make. After much discussion with MdTA staff, extensive examination of their recent bridge- and tunnel-inspection practices, and consideration of approaches being taken by other agencies, the Panel has the following findings and recommendations to offer.

Findings

1. MdTA has performed systematic inspections of all of its bridges and tunnels since its inception. These are required as part of its Trust Agreement with its bondholders as well as being necessary to insure the safety of the traveling public. MdTA's inspection methods and practices for both bridges and tunnels are similar to those of many other agencies with similar missions and responsibilities. In accordance with standard procedures MDSHA reviewed MdTA's bridge-inspection program for compliance with NBIS.[61] These reviews, conducted in 1998, 2002, and 2006, found that MdTA was in substantial compliance.

2. In 2005 MdTA performed an internal review of the organization, personnel, and mission of its engineering division following reports critical of its performance.[62] In response MdTA reorganized its engineering division, hired a new chief engineer and other engineering staff and continued its examination of its engineering functions.

3. In 2006 MdTA found there were a number of commendable practices employed by other agencies that owned large bridges that, if employed by MdTA, would strengthen its inspection program. During 2007 and 2008 the MdTA required its inspection consultants to add selected personnel with more inspection experience, altered their assignments so that different teams would inspect each bridge on alternate inspection cycles, and required inspectors to be within arm's reach of elements being inspected. In 2008 it issued new contracts, employed new inspection consultants with national inspection experience, required improved methodological approaches and work schedules, significantly increased budgets devoted to bridge inspection, reorganized its own staff in charge of inspections, and improved follow-up actions on deficiencies found in the previous inspection cycle. While these changes are not complete, and more is needed, most of this work was initiated well before the August 10, 2008 accident.

---

[61] 23 U.S.C. 151. See US Department of Transportation, Federal Highway Administration, "National Bridge Inspection Standards", *Federal Register*, vol. 69, no. 239, pp. 74419 – 74439, December 14, 2004.
[62] See, for example, *Bay Bridge Deck Investigation: Report of the Bay Bridge Overview Team Examining Premature Deterioration of the Overlays of the William Preston Lane, Jr. Memorial Bridge to the MdTA,* January 14, 2005.

4. In 2007 and 2008, using these more rigorous methods, MdTA found several structural deficiencies on its facilities that had not been noted earlier and has begun appropriate repairs. It also found that while it had been routinely conducting annual visual inspections of the Bay Bridge suspension cables, it is necessary to conduct an internal, in-depth inspection of the cables. There is no mandatory national standard for the frequency of such inspections, but an NCHRP project's recommendations[63] made in 2004 suggest doing such an inspection after 30 years and at intervals of 5 to 30 years thereafter, depending upon the age of the bridge and the amount of corrosion found in previous inspection. These internal suspension cable inspections of the Bay Bridge will be conducted in 2009.

5. Bridge railings are not typically designed to withstand the force of a crash as severe as the one that occurred on August 10, 2008, when one section of the railing was knocked off the bridge by a large tractor trailer truck striking the railing at an angle of approximately 40 degrees.

6. The railing knocked off the bridge was installed in 1986 using a design acceptable at the time, but one that would not meet today's design standards. Design standards are routinely changed, however, in many cases annually. It is neither practical nor recommended to retrofit bridges immediately to meet each such change. Rather, changes to meet later design standards are typically made to the extent possible as major bridge rehabilitation occurs.

7. The total length of the railing retrofitted on the eastbound Bay Bridge is about 8100 feet out of a total railing length of 42,572 feet, or roughly 20 percent of the total railing used on the eastbound bridge. Some of the steel bolts that had been used to fasten the Jersey barrier railing to the bridge deck were found to have corrosion. Although corrosion is not believed to be a significant factor in the accident, MdTA temporarily retrofitted all similarly designed railings on the bridge to strengthen them. The temporary retrofit restores the strength of the railing to the prior 1986 design standard but may influence the ability of the railing to redirect traffic as it is designed to do. MdTA plans to replace the temporary retrofit railings with appropriate permanent ones as soon as possible. The Panel agrees with this action.

8. The MdTA has no railings on its other bridges that employ the same connection detail as the railing that was used on the Bay Bridge. However, it does have railings built in 1986 or earlier that used the same "slip form" type of construction used on this railing. MdTA plans a special review and inspection of all such railings. The Panel agrees with this action.

9. Non-destructive evaluation techniques have been found to be effective in specific applications. These techniques are not routinely used in bridge inspection by

[63] NCHRP, *Guidelines for Inspection and Strength Evaluation of Suspension Bridge Parallel Wire Cables*, NCHRP Report 534, 2004.

agencies around the country except in selected situations where there are reasons to suspect problems.

10. The Panel considered the need for an additional inspection of the Bay Bridge, using a different engineering firm. However, MdTA has already implemented new practices wherein new teams of inspectors from different firms will be required to inspect the Bay Bridge on successive inspection cycles. This means that one set of new eyes has already inspected the Bay Bridge in 2008 and another set will do the inspection in 2009. These planned MdTA inspections appear adequate, and an additional inspection by yet another team appears unnecessary and redundant.

11. Despite the fact that MdTA has made a number of important improvements to its inspection program and has plans for further changes, the Panel has identified a number of commendable practices employed by similar agencies that could provide additional strength to the MdTA inspection program.

12. MdTA is in a period of expansion of its mission and responsibilities. It is playing a new and significant role in the construction of the ICC and the reconstruction of I-95. When completed, the ICC will be operated using tolls that vary by time of day, an innovative practice nationally and the first application of the concept in Maryland. Most of MdTA's major bridges and tunnels are aging and may require more frequent inspection and repair to keep them in safe operating condition. These and other factors will require careful planning, good management, and adequate funding.

13. Tunnel inspection, maintenance, and management practices have not been standardized to the extent that they have for bridges. National standards for tunnel inspection are currently being developed by national organizations representing owners and operators of tunnels.

14. MdTA has a number of commendable practices planned for future implementation. There is a need to develop a strategic plan for inspection improvement including milestones, resources, and timelines.

Recommendations

1. MdTA's steps to select high-quality inspection consultants for its inspection programs are important and appropriate. It should also have in-house staff sufficient to manage the program, oversee follow-up actions on inspection findings, and actually perform some quality-assurance inspections as a check on consultant performance. It should review its staff positions to ensure that the three planned additional positions are adequate. MdTA's inventory of structures is sufficiently large to dedicate a position solely to oversight of the inspection program.

2. MdTA should insure that it obtains and maintains current knowledge on best practices by becoming a more active associate member of AASHTO, participating in the activities of the AASHTO Highway Subcommittee on Bridges and Structures, and encouraging its staff to keep current on relevant research and innovations. This is equally important in the tunnel area, where national standards are currently being developed.

3. To increase public confidence in its inspection programs, MdTA should strive for more transparency of its activities. This could entail steps such as establishing citizens working groups, providing more details of its inspections in accordance with appropriate security considerations, and inviting representatives of the media and the general public to accompany inspectors during actual inspections at appropriate points when safety and security permit.

4. During this period of revitalization of its inspection programs, the Authority members and its Chairman should seek ways to take full advantage of the expertise and experience of other agencies, especially MDSHA, to provide additional oversight. For example:
    a. MDSHA should continue to participate in the selection of engineering consultants used by MdTA in its inspection programs.
    b. At points where MDSHA and FHWA make comments on MdTA's inspection program during their periodic compliance reviews, MdTA should continue to work with MDSHA and FHWA to resolve the comments.

5. MdTA should implement the Panel's detailed recommendations, which are described in Chapters 4, 5, and 6, to strengthen MdTA's bridge- and tunnel-inspection program.

6. MdTA should develop and implement plans of action for its scour-critical bridges. It should conduct a baseline hydrographic survey of the Bay Bridge and other major bridges and develop scour-remediation plans for areas showing severe scour. MdTA should follow-up by monitoring any changes in the channel cross sections in accordance with AASHTO procedures.[64] Future hydrographic studies should be conducted as necessary based upon results of channel cross section assessments.

7. MdTA should conduct a baseline hydrographic survey on each of its two tunnels. It should develop scour-remediation plans for areas showing severe scour, and should follow-up by monitoring any changes in the channel cross sections.[65] Future hydrographic studies should be conducted as necessary based upon results of channel cross section assessments.

---

[64] AASHTO, *Manual for Bridge Evaluation*, 2008, Section 2.4.1.
[65] The techniques recommended for bridges in AASHTO's *Manual for Bridge Evaluation*, 2008, Section 2.4.1 should be adopted for the two MdTA tunnels.

8. MdTA should find and verify the load ratings on those bridges where ratings are currently missing or incomplete. MdTA should verify the operating ratings of its bridges where legal operating loads exceed the operating ratings. These bridges should be posted if the ratings so indicate.

9. MdTA should formalize and further document its inspection and asset-management procedures. For example:
    a. MdTA should define and document the requirements for special inspections and for in-depth inspections. It should set typical frequencies for each.
    b. MdTA should prepare and maintain a system-wide bridge-inspection manual.
    c. MdTA should prepare and maintain separate individual complex bridge-inspection manuals, in accord with AASHTO recommendations.[66] Similarly, it should prepare individual tunnel-inspection manuals for each of its two tunnels.
    d. MdTA should develop formal quality control and quality assurance requirements that define the roles and responsibilities of both consultants and in-house staff.
    e. MdTA should formalize its procedures for fracture-critical member inspections, and should change it terminology from "catastrophic elements" to "fracture-critical members," a more nationally accepted terminology.
    f. MdTA should use electronic inspection data collection and investigate the input templates available in existing systems and those used by other agencies rather than having inspection consultants develop their own.
    g. MdTA's list of fracture-critical and fatigue-prone members should include notes and sketches showing the location of the elements.

10. MdTA needs to insure that personnel conducting and supervising inspections are thoroughly trained and have available the information needed to maximize their effectiveness. For example:
    a. Comprehensive bridge-inspection training, as required by the NBIS, should be added to the position description of the program manager. Although the current program manager for bridge inspection at the MdTA has completed a comprehensive bridge-inspection training course, this should be a standing requirement for the position.
    b. Periodic bridge-inspection refresher training should be a requirement for bridge-inspection team leaders and members as part of a quality assurance program that is required by NBIS.
    c. MdTA should ensure that its consultant inspectors have an understanding of the performance history of major facilities and information on the unique features of each, providing as-built plans and special design details for their review.

[66] AASHTO, *Manual for Bridge Evaluation*, 2008.

11. MdTA inspection reports need further improvement. For example:
    a. Inspection reports should be written in a style that assumes they will be accessed and used by individuals who may be unfamiliar with inspection report formats and details.
    b. MdTA should continue to include more quantitative data in its inspection reports. All deficiencies noted should be quantified with regard to location, extent, and severity so as to permit comparisons between successive inspections. Description, drawing, and photographs of deficiencies should be included along with recommended repairs. Photographs should include the "item number" and the "priority" for cross reference purposes.

12. MdTA should consider the use of non-destructive evaluation techniques where appropriate, as described in the AASHTO *Manual for Bridge Evaluation*,[67] to address specific concerns identified during the course of its inspections.

13. MdTA should monitor developments related to NTIS and explore the usefulness of the supporting FHWA Tunnel Management System – Tunnel Inspection Manual,[68] Maintenance Manual,[69] and database software.

14. MdTA should confer with the Maryland Department of the Environment and set explicit storm-surge levels for which MdTA tunnels are protected.

15. MdTA should upgrade its asset-management system, building on the experience gained by MDSHA. It should identify and include preventative-maintenance work in its bridge- and tunnel-management systems.

16. MdTA should consider the adoption of the GASB 34 modified approach to enhance its asset management as a tool in system preservation and long-term infrastructure planning.

17. To improve its bridge and tunnel inspection, MdTA has taken and planned many steps and additional ones are recommended here. To assure that this work receives the attention and resources that it warrants, the MdTA Chairman and Authority Members should require the MdTA staff to develop a strategic plan to accomplish these tasks, including resources, milestones, and timelines.

18. To confirm that MdTA's inspection program of revitalization has reached its goals, MdTA should seek an FHWA peer review of its inspection program by 2011.

---

[67] AASHTO, *Manual for Bridge Evaluation*, 2008.
[68] FHWA, *Highway and Rail Transit Tunnel Inspection Manual*, 2005.
[69] FHWA, *Highway and Rail Transit Tunnel Maintenance and Rehabilitation Manual*, 2005.

Appendix A: Panel Charter Statement

The mission of the MdTA Bridge and Tunnel Inspection Peer Review Panel is to review the MDTA's bridge and tunnel structural inspection practices to ensure the safety of the traveling public in the context of the recent Chesapeake Bay Bridge accident on August 10, 2008; and make recommendations for improvements and enhancements to the Secretary of the Maryland Department of Transportation. In the conduct of this work the Panel will:

1. Review the historical and recently implemented general methods and procedures used by the MDTA in the inspection and reporting of all its bridges and tunnels.
2. Give special attention to the MDTA's major bridges and particularly focus on the Chesapeake Bay Bridge.
3. Identify commendable practices of other agencies as such practices are available in publications by the FHWA, TRB, AASHTO, individual states, bridge and tunnel authorities, and others as well as the experience and expertise available within the Panel.
4. Share all findings with the NTSB as the NTSB may request.
5. Produce a draft report of its findings and recommendations related to public safety not later than February 1, 2009.
6. Produce a final report of its findings and recommendations not later than April 1, 2009.[70]

WORK PLAN

- Update the draft charter, work plan, and major schedule milestones as needed in October meeting.
- Finalize the charter, work plan, and major schedule milestones at the November meeting.
- Review an outline of the draft report at the November 24-25 meeting.
- In addition to information provided by the MDTA, identify and utilize industry peer agencies, organizations, entities, research projects or reports as resources.
- Submit progress summary to the Secretary of Transportation at the November, December, and January meetings.
- Conduct working sessions involving the full Panel to discuss, compile, combine, and develop industry standard commendable practices at the November and December meetings.
- Compare and contrast industry standard commendable practices to the historical and recently implemented MdTA condition inspection practices at the November and December meetings.

[70] This initial date for completion was moved back to June 1, 2009 to allow for Panel participation in legislative hearings and a presentation to the MdTA Chairman and Members of the Authority in March, 2009.

- Review draft report developed to date in December.
- Distribute complete draft report for review and comment one week prior to January meeting.
- Conduct final working session involving the full Panel to finalize the draft report at the January meeting.
- Discuss updated draft report during the January 22 conference call.
- Submit Final Peer Review Panel Draft Report by February 1, 2009.
- Continue studies and deliberations as required for final report in February and March.
- Participate in legislative testimony and meet with MdTA Chairman and Authority Members
- Prepare Final Report
- Submit Final Peer Review Report by June 1, 2009

Appendix B: Panel Members Roster and Biographical Data

B.1 Roster of Panel Members

Mary Lou Ralls, P.E. (Panel Chair)
Principal
Ralls Newman, LLC
2906 Pinecrest Drive
Austin, TX 78757
Phone: (512) 422-9080
Fax: (512) 371-3778
ralls-newman@sbcglobal.net

Shay K. Burrows, P.E.
Senior Structural Engineer
Federal Highway Administration - Resource Center
10 South Howard Street, Suite 4000
Baltimore, MD 21201
Phone: (410) 962-6791
Mobile: (410) 215-6751
Fax: (410) 962-4586
shay.burrows@fhwa.dot.gov

Thomas B. Deen, P.E.
Consultant
416 Butlers Landing
Stevensville, MD 21666
Phone: (410) 643-1590
Mobile: (202) 669-2294
tbdeen@atlanticbb.net

Jeff Holland
Executive Director
Chesapeake Bay Bridge and Tunnel District
32386 Lankford Highway
Cape Charles, VA 23310
Phone: (757) 331-2960
jholland@cbbt.com

Malcolm T. Kerley, P.E. Chief Engineer
Virginia Department of Transportation
1401 E. Broad Street
Richmond, Virginia 23219
Phone: (804) 786-4798
Fax: (804) 786-2940
Mal.Kerley@VDOT.Virginia.gov

Donald W. Vannoy, Ph.D, P.E.
President
Vannoy & Associates, LLC
708 Edelblut Drive
Silver Spring, MD 20901
Phone: (301) 593-1003
Mobile: (301) 943-6331
Fax: (301) 593-8541
dvannoy@vannoyassociates.com

Bernard Yostpille, P.E.
Assistant Chief Structural Engineer
The Port Authority of NY & NJ
Phone: (973) 792-4545
Mobile: (908) 208-5053
byostpil@panynj.gov

Damian Kulash, Ph. D. (Panel Staff)
5448 Chevy Chase Parkway, NW
Washington DC 20015
Phone: (323) 953-0514
Mobile: (202) 374-8089
dkulash@comcast.net

B.2 Biographical Data for Panel Members

Mary Lou Ralls (Panel Chair) is an engineering consultant and principal of Ralls Newman, LLC in Austin, Texas. She earned BSCE and MSE degrees from the University of Texas at Austin in 1981 and 1984, respectively, before joining the Texas Department of Transportation (TxDOT). At TxDOT she worked in various engineering positions before being appointed the state bridge engineer and Director of the Bridge Division in 1999. Under her direction, the division oversaw and provided assistance in bridge program and project development; structural and geotechnical design; standards and plan development; plans, specifications, and estimates review; safety inspection; and bridge construction and maintenance support to the 25 districts, and administered various programs for its 48,000 on-system and off-system bridges. Ralls retired from TxDOT in 2004 after 20 years of service. In 2004-2005 she served as a member of the task force examining the deck failure of the Chesapeake Bay Bridge. She is a registered professional engineer in Texas and continues work to advance bridge technologies. Ralls is active in a number of national activities and currently serves as chair of the TRB Technical Activities Division's Design and Construction Group.

Shay K. Burrows is a Senior Structural Engineer with the Federal Highway Administration's Resource Center in Baltimore, Maryland. He earned a Bachelor of Science degree in Mechanical Engineering in 1993 and a Master of Science degree in Civil Engineering in 1996 with an emphasis in structures, both from the Rutgers University. He is a registered professional engineer in Pennsylvania. Burrows joined the Federal Highway Administration in 1996 and advanced his bridge engineering knowledge and experience with positions in New Hampshire, Mississippi, Colorado, and New Jersey before joining the Resource Center in 2004 to provide guidance and solutions in the structural engineering areas of bridge inspection, bridge management, and transportation security. He has led teams on bridge-inspection program reviews of state transportation departments and bridge-inspection program exchanges among several States to share bridge-inspection policies and practices and identify commendable practices. Burrows has also worked with the AASHTO Subcommittee on Bridges and Structures to develop a national framework for bridge-inspection quality control and quality assurance programs.

Thomas B. (Tom) Deen is a transportation consultant. Until September 1994 he was the Executive Director of the Transportation Research Board (TRB), a private non-profit unit of the United States' National Academy of Sciences and the National Academy of Engineering. Deen initiated the TRB studies that recommended the $150 million Strategic Highway Research Program (SHRP) and the continuing Transit Cooperative Research Program. He served as chairman of the planning committee for ITS-America, and guided the effort to develop the first national strategic plan for ITS. Prior to 1980, Deen was President of Alan M. Voorhees and Associates, a major transportation planning and engineering firm. During this period he directed major metropolitan transportation studies involving highways, airports, and mass transit, both in the U.S. and abroad. Earlier, he was the Director of Planning for the Washington, D.C. rail transit system during the period when this $12 billion system was in the initial planning stages. In 1998 he was elected to the National Academy of Engineering. In 1999, Deen was appointed by the Governor of Maryland as Chairman of the Transportation Solutions Group, a special

committee to recommend solutions to problems in the growing Washington D.C. region, with a focus on the Inter-county Connector. More recently, he was appointed Co-Chairman of a task force established by the Maryland legislature to evaluate the proposed maglev transit system between Baltimore and Washington. In 2003 he was appointed Vice Chairman of a study committee of the National Research Council making recommendations on the transportation of highly radioactive spent nuclear fuel to the repository at Yucca Mountain. In 2004-05 he served as Chairman of a task force examining the deck failure of the Chesapeake Bay Bridge. Deen was educated at the University of Kentucky, University of Chicago, and Yale. He is a Civil Engineer registered in six states, and is a member of the National Academy of Engineering. A winner of several awards, he is a frequent speaker at symposiums directed toward solution of major transportation problems.

Jeffrey B. Holland (Jeff) has been Executive Director of the Chesapeake Bay Bridge and Tunnel District since June 2005. Prior to this most recent appointment, Holland held the position of Director of Finance and Assistant Director of Finance. He has been employed by the Chesapeake Bay Bridge and Tunnel District since 1995. During this time, Holland has served as the Chief Financial Officer, Risk Manager, Human Resources Manager, and Financial Advisor to the Chesapeake Bay Bridge and Tunnel Commission, as well as being responsible for the general management and oversight of the day-to-day operations of the Chesapeake Bay Bridge-Tunnel. In addition, he is a member of the International Bridge, Tunnel and Turnpike Association and the Government Finance Officers' Association. Holland was responsible for the integration of the modified approach to infrastructure reporting for the District in 2004. Previously, he was a Staff Accountant with the accounting firm of KPMG Peat Marwick, Norfolk VA. Holland received his Bachelor of Business Administration degree with an accounting major from the College of William and Mary in 1993.

Malcolm T. Kerley (Mal) is a 1971 graduate of the Virginia Military Institute and received his Masters Degree in Civil Engineering from the University of Virginia in 1973. During his thirty-seven years with the Virginia Department of Transportation (VDOT), he worked in several areas of VDOT's Structure and Bridge Program mainly involved in the design and development of new structural plans. From 1992-2002, he served as State Structure and Bridge Engineer where he was responsible for the design, construction, inspection and maintenance of the Department's 20,000 structures. He was promoted in July 2002 to his present position where he is responsible for the engineering aspects of the Department, including overseeing the pre-construction design activities of five divisions within VDOT. A registered professional engineer in Virginia, Kerley is actively involved on the AASHTO Standing Committee on Highways, and is Chair of the AASHTO Subcommittee on Bridges and Structures.

Donald W. (Don) Vannoy received his Bachelor of Science degree in Civil Engineering from the West Virginia Institute of Technology in 1970, a Master of Science in 1971 and Doctor of Philosophy in Civil Engineering in 1975, from the University of Virginia. He is a nationally and internationally recognized authority in Civil Engineering with over thirty five years of design experience. He is Professor Emeritus of Civil & Environmental Engineering at the University of Maryland where he taught for 33 years including the areas of design, analysis, construction, maintenance, monitoring and inspection techniques for bridges. In addition, he is President of the forensic engineering company Trident Engineering Associates, Inc. and the general civil

engineering consulting firm Vannoy & Associates, LLC. He is a registered professional engineer in Maryland, West Virginia, Virginia, Louisiana, Texas and the District of Columbia. Vannoy has served as the Chief Technical Advisor for the United Nations infrastructure upgrade programs including bridges in India, Malawi, Romania and the United Arab Emirates. He has conducted over 2,500 forensic studies and failure analysis of projects throughout the country. The projects have included topics involving water intrusion, facade failures, roofing, construction, structural evaluations, building envelope studies, bridges, foundation evaluations, and general civil engineering problems.

Bernard (Bernie) Yostpille graduated from Manhattan College with a B.S.C.E in 1979 and then from the Polytechnic Institute of New York with a M.S.C.E. in 1985. He is a licensed professional engineer in the states of New York and New Jersey. Upon completion of his undergraduate studies, Yostpille joined the Port Authority of New York and New Jersey. Currently, he is their Assistant Chief Structural Engineer in charge of a professional staff of 54 people and a large on-call consultant program. During his 29-year career with the Authority, he has supervised and performed structural design engineering for buildings, bridges, marine, and transportation facilities. Major programs he contributed to include the Newark Airport Redevelopment Program, the Newark Airport Monorail program, the JFK International Airport Redevelopment Program, major modifications to the World Trade Center building and sub-grade (pre-9/11), and WTC/PATH post attack recovery projects. Yostpille has also conceptualized and implemented blast security enhancements at bridge, building, and airport facilities. Yostpille currently serves as Vice President of the American Society of Civil Engineers Met Section. He is a former steering committee member of the American Society of Civil Engineers (ASCE) 2005 Structures Congress, a member of the Structural Engineering Association of New York, and a member of the National Society of Professional Engineers. He previously served as President of the Monmouth County Chapter of the New Jersey Society of Professional Engineers. He also served on the New York City Model Building Code sub-committee for progressive collapse. Yostpille currently serves as the ASCE Met Section committee chair for continuing education. He has participated in numerous other educational oriented activities including high school career days and student mentoring programs.

Damian J. Kulash (Panel staff) has extensive experience in analyzing transportation policies and crafting strategies to put them in place. He has managed many multi-disciplinary, multi-perspective teams to extract action plans in complex, difficult situations. He has successfully brought industrial and government leaders to work together, and has forged new working arrangements between state and federal agencies. As Executive Director of the $153 million Strategic Highway Research Program, Kulash created and managed diverse advisory committees to guide this program toward useful products, and to work with federal, state, and industry organizations to put results into practice. As President and CEO of the Eno Transportation Foundation, Kulash established a series of forums dealing with cutting-edge issues affecting all modes of transportation and their compatibility with economic development, environmental quality, safety, and security.

Appendix C: MdTA Organization and Recent Changes

C.1 MdTA Management Organization

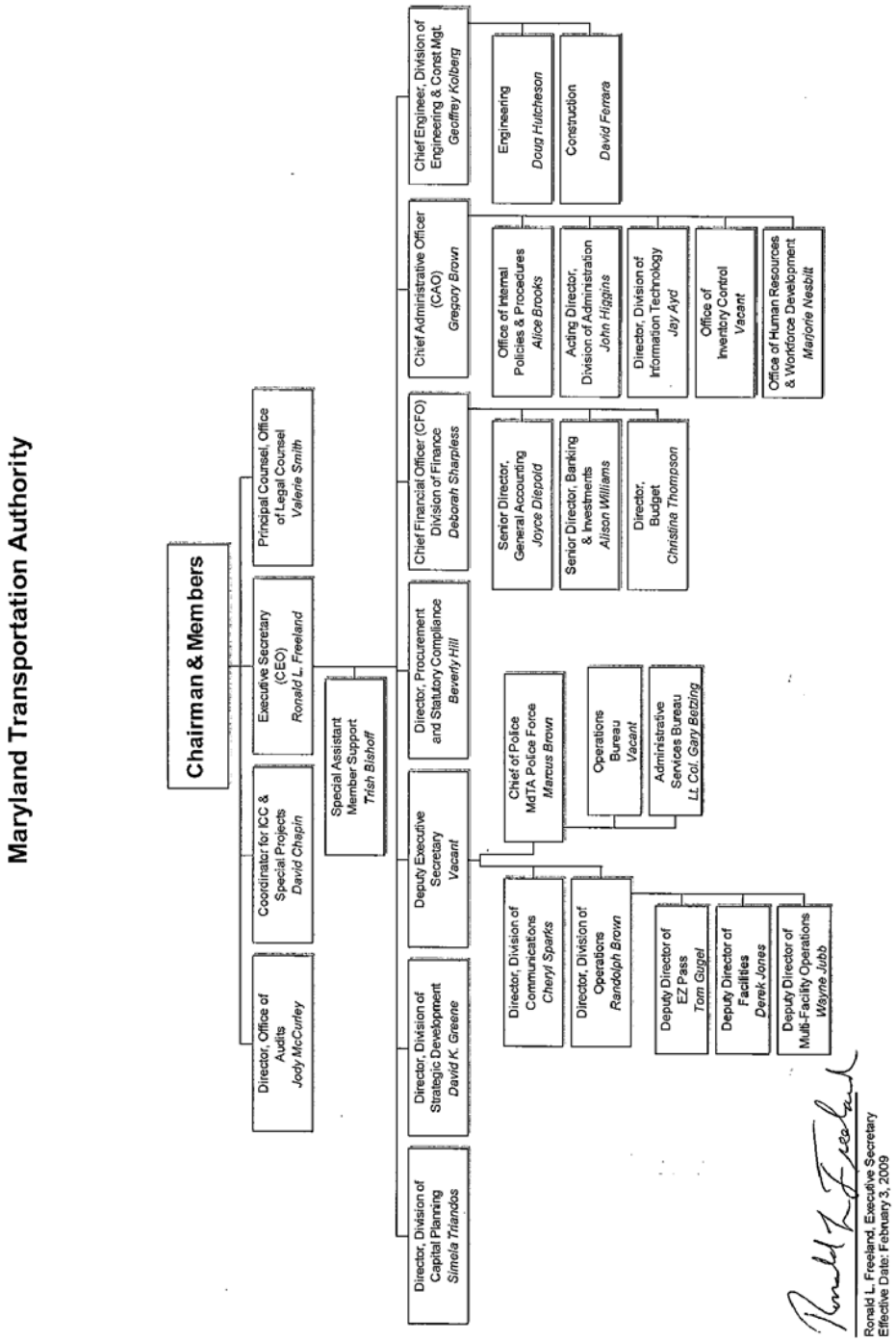

C.2 Organization for MdTA Office of Engineering and Construction

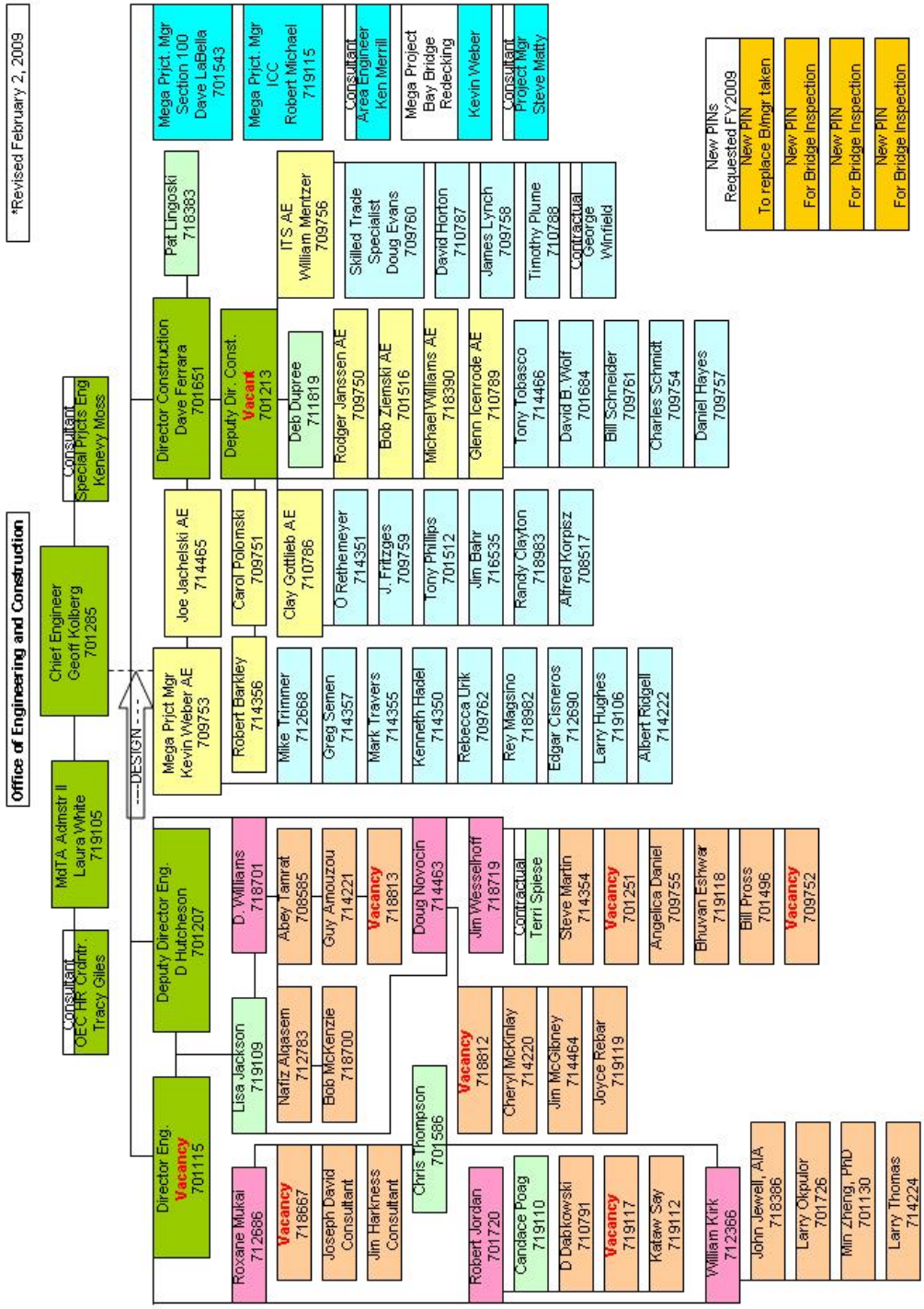

C.3 MdTA Organizational and Procedural Changes since 2005

(Provided to the Panel by MdTA staff.)

- Director of Engineering Retired
- New Director of Construction
- New Deputy Director of Engineering
- New Chief of Procurement
- New Director of Facilities
- New Manager of Bridges and Tunnels
- Added four (4) new Area Engineers
- Reorganizing Procurement / Administration
- Initiated Policy and Procedure Development in every discipline
- Started Annual "TOUR" of Facilities
- Regular Scheduled Project and Program Reviews
- Weekly staff meetings started
- Advertisement Approval sign off sheet requirement
- Contractor Accountability
- Consultant Accountability
- Staff Accountability
- Morale Improvement Enhancements
- Training Budget established
- Establishing Administrative Standards
- Adopting Primavera software to manage the Planning, Design and Engineering, Procurement, and Construction Programs
- Initiated After Action Report Requirement
- Contractor and Consultant Listening Post

Appendix D: Acronyms

ACI	American Concrete Institute
AASHTO	American Association of State Highway and Transportation Officials
ASCE	American Society of Civil Engineers
BIRM	Bridge Inspector's Reference Manual
DOT	Department of Transportation
FHWA	Federal Highway Administration
GASB	Governmental Accounting Standards Board
GARVEE	Grant-Anticipation Revenue Vehicles
GDOS	GIS Database Document Organization System
GIS	Geographic Information Systems
HRB	Highway Research Board
ICC	Intercounty Connector
ITS	Intelligent Transportation Systems
LRFD	Load and Resistance Factor Design Specifications
MDOT	Maryland Department of Transportation
MDSHA	Maryland State Highway Administration
MdTA	Maryland Transportation Authority
NBI	National Bridge Inventory
NBIS	National Bridge Inspection Standards
NCHRP	National Cooperative Highway Research Program
NDE	Non-Destructive Evaluation
NICET	National Institute for Certification in Engineering Technologies
NTIS	National Tunnel Inspection Standards
NTSB	National Transportation Safety Board
PANYNJ	Port Authority of New York and New Jersey
PE	Professional Engineer
POA	Plan of Action
QA	Quality Assurance
QC	Quality Control
SIA	Structure Inventory and Appraisal
TL	Test Level
TRB	Transportation Research Board

Appendix E: Definitions

The terms listed here, which are used throughout this report, are defined as follows in NBIS:[71]

Bridge. A structure including supports erected over a depression or an obstruction, such as water, highway, or railway, and having a track or passageway for carrying traffic or other moving loads, and having an opening measured along the center of the roadway of more than 20 feet between undercopings of abutments or spring lines of arches, or extreme ends of openings for multiple boxes; it may also include multiple pipes, where the clear distance between openings is less than half of the smaller contiguous opening.

Bridge inspection experience. Active participation in bridge inspections in accordance with the NBIS, in either a field inspection, supervisory, or management role. A combination of bridge design, bridge maintenance, bridge construction and bridge inspection experience, with the predominant amount in bridge inspection, is acceptable.

Bridge inspection refresher training. The National Highway Institute "Bridge Inspection Refresher Training Course" or other State, local, or federally developed instruction aimed to improve quality of inspections, introduce new techniques, and maintain the consistency of the inspection program.

Bridge Inspector's Reference Manual (BIRM). A comprehensive FHWA manual on programs, procedures and techniques for inspecting and evaluating a variety of in-service highway bridges. This manual may be purchased from the U.S. Government Printing Office, Washington, DC 20402 and from National Technical Information Service, Springfield, Virginia 22161, and is available at the following URL: ttp://www.fhwa.dot.gov/bridge/bripub.htm.

Complex bridge. Movable, suspension, cable stayed, and other bridges with unusual characteristics.

Comprehensive bridge inspection training. Training that covers all aspects of bridge inspection and enables inspectors to relate conditions observed on a bridge to established criteria (see the Bridge Inspector's Reference Manual for the recommended material to be covered in a comprehensive training course).

Critical finding. A structural or safety related deficiency that requires immediate follow-up inspection or action.

Damage inspection. This is an unscheduled inspection to assess structural damage resulting from environmental factors or human actions.

---

[71] These definitions are taken from US Department of Transportation, Federal Highway Administration, "National Bridge Inspection Standards", ***Federal Register***, vol. 69, no. 239, pp. 74419 – 74439, December 14, 2004.

Fracture-critical member (FCM). A steel member in tension, or with a tension element, whose failure would probably cause a portion of or the entire bridge to collapse.

Fracture-critical member inspection. A hands-on inspection of a fracture-critical member or member components that may include visual and other nondestructive evaluation.

Hands-on. Inspection within arms length of the component. Inspection uses visual techniques that may be supplemented by nondestructive testing.

Highway. The term ‘‘highway’’ is defined in 23 U.S.C. 101(a)(11).

In-depth inspection. A close-up, inspection of one or more members above or below the water level to identify any deficiencies not readily detectable using routine inspection procedures; hands-on inspection may be necessary at some locations.

Initial inspection. The first inspection of a bridge as it becomes a part of the bridge file to provide all Structure Inventory and Appraisal (SI&A) data and other relevant data and to determine baseline structural conditions.

Legal load. The maximum legal load for each vehicle configuration permitted by law for the State in which the bridge is located.

Load rating. The determination of the live load carrying capacity of a bridge using bridge plans and supplemented by information gathered from a field inspection.

National Institute for Certification in Engineering Technologies (NICET). The NICET provides nationally applicable voluntary certification programs covering several broad engineering technology fields and a number of specialized subfields. For information on the NICET program certification contact: National Institute for Certification in Engineering Technologies, 1420 King Street, Alexandria, VA 22314–2794.

Operating rating. The maximum permissible live load to which the structure may be subjected for the load configuration used in the rating.

Professional engineer (PE). An individual, who has fulfilled education and experience requirements and passed rigorous exams that, under State licensure laws, permits them to offer engineering services directly to the public. Engineering licensure laws vary from State to State, but, in general, to become a PE an individual must be a graduate of an engineering program accredited by the Accreditation Board for Engineering and Technology, pass the Fundamentals of Engineering exam, gain four years of experience working under a PE, and pass the Principles of Practice of Engineering exam.

Program Manager. The individual in charge of the program, that has been assigned or delegated the duties and responsibilities for bridge inspection, reporting, and inventory. The program manager provides overall leadership and is available to inspection team leaders to provide guidance.

Public road. The term "public road" is defined in 23 U.S.C. 101(a)(27 as "any road or street under the jurisdiction of and maintained by a public authority and open to public travel."

Quality assurance (QA). The use of sampling and other measures to assure the adequacy of quality control procedures in order to verify or measure the quality level of the entire bridge inspection and load rating program.

Quality control (QC). Procedures that are intended to maintain the quality of a bridge inspection and load rating at or above a specified level.

Routine inspection. Regularly scheduled inspection consisting of observations and/or measurements needed to determine the physical and functional condition of the bridge, to identify any changes from initial or previously recorded conditions, and to ensure that the structure continues to satisfy present service requirements.

Routine permit load. A live load, which has a gross weight, axle weight or distance between axles not conforming with State statutes for legally configured vehicles, authorized for unlimited trips over an extended period of time to move alongside other heavy vehicles on a regular basis.

Scour. Erosion of streambed or bank material due to flowing water; often considered as being localized around piers and abutments of bridges.

Scour-critical bridge. A bridge with a foundation element that has been determined to be unstable for the observed or evaluated scour condition.

Special inspection. An inspection scheduled at the discretion of the bridge owner, used to monitor a particular known or suspected deficiency.

State transportation department. The term "State transportation department" is defined in 23 U.S.C. 101(a)(34).

Team leader. Individual in charge of an inspection team responsible for planning, preparing, and performing field inspection of the bridge.

Underwater diver bridge inspection training. Training that covers all aspects of underwater bridge inspection and enables inspectors to relate the conditions of underwater bridge elements to established criteria (see the Bridge Inspector's Reference Manual section on underwater inspection for the recommended material to be covered in an underwater diver bridge inspection training course).

Underwater inspection. Inspection of the underwater portion of a bridge substructure and the surrounding channel, which cannot be inspected visually at low water by wading or probing, generally requiring diving or other appropriate techniques.