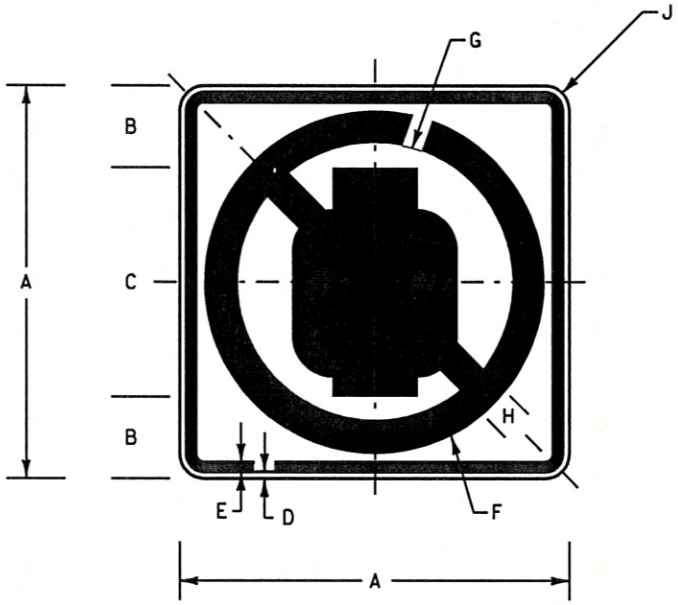

NOTE: SEE D9-15 STANDARD DETAIL FOR SYMBOL DESIGN.

SIGN SIZE	DIMENSIONS (INCHES)								
	A	B	C	D	E	F	G	H	J
STANDARD	18	3-3/4	10-1/2	3/8	5/8	7-3/4	6-1/4	1-1/2	1-1/2
RAMP	24	5	14	3/8	5/8	10-1/2	8-1/2	2	1-1/2
FREEWAY	30	6-1/4	17-1/2	1/2	3/4	13-1/8	10-5/8	2-1/2	1-7/8

REFERENCES

MUTCD - 2B.36, 2B.52, 2B.54
ETL GUIDELINES - NONE

COLORS

LEGEND - SYMBOL & BORDER - BLACK
CIRCLE & DIAGONAL - RED

BACKGROUND - WHITE

Maryland Transportation Authority

APPROVED		REVISIONS: DATE	APPROVAL
MdTA DIRECTOR - ENGINEERING	10/19/07 DATE		
SHA DIRECTOR - TRAFFIC & SAFETY	11/15 DATE		
FEDERAL HIGHWAY ADMINISTRATION	DATE		

MARYLAND TRANSPORTATION AUTHORITY
DIVISION OF ENGINEERING

PROPANE GAS RESTRICTION SIGN

STANDARD NO.: R14-3(1)